Pike County 30-Year Water Resources Management Plan

Acknowledgements

The following Pike County Water Planning Committee (PWPC) members were instrumental in providing information and guidance throughout the development of the Pike County Water Resources Plan. These committee members include:

Carol Berry, City of Williamson

Scott Huckaby, PCWA

Tina Lee, City of Molena

Joyce Corley, City of Molena

Doug Neath, City of Concord

Brandon Roger, Pike County

Joe Walter, City of Zebulon

Chet Ward, City of Meansville

Brooklyne Wassel, Pike County Extension Agent

Additionally, we would like to thank the leadership provided by the University of Georgia and Georgia Environmental Protection Division planning participants listed below.

Ellen Bauske, UGA

Blue Cole, EPD

Mussie Habteselassie, UGA

Johanna Smith, EPD

The consulting team included representatives from the following two firms.

Sustainable Water Planning and Engineering

Blue Cypress Consulting

This project was partly funded by a Georgia Environmental Protection Division Seed Grant.

Table of Contents

0 Executive Summary 7

1 Background and Introduction 11

1.1 Location 11

1.2 Planning Process 12

1.3 Population Projections 13

1.4 Anticipated Growth Patterns 16

1.5 Insurance Services Office (ISO) Rating Program 17

1.6 Current Rate Structures 19

1.7 Upper Flint Regional Water Plan 22

2 Existing Systems and Future Demands 24

2.1 GIS Mapping 24

2.2 Existing Water Supply Sources and Distribution Systems 25

2.2.1 Current Water Supply Sources 25

2.2.2 Distribution Systems 28

2.2.3 Inactive Water Supply Sources 30

2.3 Existing Collection Systems and Water Reclamation Facilities 31

2.3.1 Collection Systems 31

2.3.2 Water Reclamation Facilities 34

2.4 Septic Systems 36

2.5 Water Demand Forecasts 38

2.6 Wastewater Flow Forecasts 42

2.7 Septic System Forecasts 45

3 Alternatives Evaluation 46

3.1 Water Supply and Distribution Alternatives 46

3.1.1 Focused Improvements 46

3.1.2 Development Node 50

3.1.3 Regional Water System 52

3.2 Wastewater Collection and Treatment Alternatives 53

3.2.1 Focused Wastewater Improvements 53

3.2.2 Wastewater System Expansion 57

3.3 Overall Recommendation Actions ... 59

4 Recommended Actions ... 63

4.1 Implementation Timeframe ... 63

4.2 Funding Sources ... 70

4.2.1 Georgia Environmental Finance Authority (GEFA) Programs ... 70
4.2.2 American Rescue Plan Act (ARPA) ... 72
4.2.3 EPD Regional Water Plan Seed Grants ... 73
4.2.4 Special Purpose Local Option Sales Tax (SPLOST) ... 73
4.2.5 Georgia 319(h) Grants ... 73

4.3 Priority Implementation Action Items ... 74

4.3.1 Share and Build GIS Data (**OIA1**) ... 74
4.3.2 Adopt Policies for Sustainable Growth (**OIA3**) ... 75
4.3.3 Evaluate Existing Rate Structure (**OIB1**) ... 75
4.3.4 Adopt Revised Rates (**OIB2**) ... 76
4.3.5 Install Production Meters at Each Source (**IA1**) ... 76
4.3.6 Identify Non-Metered Service Connections (**IA2**) ... 77
4.3.7 Identify a New Supply Source to Meet Current Demands (**IB1**) ... 77
4.3.8 Map Fire Hydrants in GIS (**IC1**) ... 78
4.3.9 Implement a Valve Assessment and Mapping Program (**IC2**) ... 79
4.3.10 Update Construction and Inspection Requirements (**IE3**) ... 79
4.3.11 Concord North Pond Rehabilitation (**WWIA1**) ... 80
4.3.12 Concord South Pond Rehabilitation (**WWIA2**) ... 80
4.3.13 Flow Monitoring of Plant Influent & Effluent (**WWIA4**) ... 81
4.3.14 Identify Priority I&I Sewershed (**WWIC1**) ... 81
4.3.15 Assess Priority Sewershed (**WWIC2**) ... 82
4.3.16 Update Construction & Inspection Requirements (**IE3**) ... 83

4.4 Implementation Timeline ... 83

4.5 Progress and Plan Update ... 86

5 Appendices ... 87

List of Figures

Figure ES-1: Pike County Growth Projections (2020 to 2060) 7
Figure ES-2: Planning Process 8
Figure ES-3: Number of Action Items by Timeline 9
Figure 1-1: Pike County Location Map 11
Figure 1-2: Pike County 12
Figure 1-3: Planning Process 13
Figure 1-4: Historic Population Trends 14
FIGURE 1-5: Population Projection Scenarios 15
FIGURE 1-6: Population Projections 16
FIGURE 1-7: Anticipated Future Growth Area 17
FIGURE 1-8: Number of US Communities by Fire Prevention and Protection Class 18
FIGURE 1-9: Public protection classification (PPC) Percentage of Points by Category 18
Figure 1-10. Water Bills based on 5,000-gallon consumption 20
Figure 1-13: Water and Wastewater Rate Affordability 21
Figure 1-14: Pike County Within the Upper Flint Regional Water Planning District 22
Figure 2-1. Active Primary Water Supply Sources 27
Figure 2-2. Emergency Water Supply Interconnections 28
Figure 2-3. Mapped Water Distribution Pipelines 29
Figure 2-4. Inactive Water Supply Wells 31
Figure 2-5. Wastewater Collection Systems 33
Figure 2-6. Water Reclamation Facilities 34
Figure 2-7. Known Septic Systems From Pike County ENvironmental Health 37
Figure 2-8. Water Demand Forecasting Methodology 38
Figure 2-9. Concord Water Demand Forecasts 39
Figure 2-10. Meansville Water Demand Forecasts 40
Figure 2-11. Molena Water Demand Forecasts 40
Figure 2-12. Williamson Water Demand Forecasts 41
Figure 2-13. Zebulon Water Demand Forecasts 41
Figure 2-14. Pike County Water & Sewer Authority Water Demand Forecasts 42
Figure 2-15. Wastewater Flow Forecast Methodology 43
Figure 2-16. Concord Wastewater Flow Forecasts 44
Figure 2-17. Zebulon Wastewater Flow Forecasts 44
Figure 4.1. Implementation Timeframe Categories 63

List of Tables

Table 1-1. PPC Score by Category 19
Table 1-2. Cost Recovery Ratio by Provider 21
Table 2-1. Current Water Supply Sources by Provider 26
Table 2-2. City of Concord Water Reclamation Facilities 35
Table 2-3. City of Zebulon Water Reclamation Facilities 36
Table 2-4. Water Forecast Inputs by Community 39
Table 2-5. Wastewater Flow Inputs by System 43
Table 2-6. Septic System Forecasts by Community in MGD 45
Table 3-1. Focused Improvements (I) Recommended Actions 46
Table 3-2. Development Node (II) Recommended Actions 50
Table 3-3. Regional Water System (III) Recommended Actions 52
Table 3-4. Focused Wastewater Improvements (WWI) Recommended Actions 54
Table 3-5. Wastewater System Expansion (WWII) Recommended Actions 57
Table 3-6. Overall (O) Recommended Actions 60
Table 4-1. Focused Water Alternatives Implementation 64
Table 4-2. Water Development Node Alternatives Implementation 65
Table 4-3. Regional Water System Alternatives Implementation 66
Table 4-4. Focused Wastewater System Alternatives Implementation 67
Table 4-5. Wastewater System Expansion Alternatives Implementation 68
Table 4-6. Overall Recommendations Implementation 69
Table 4-7. Implementation Timeline for Priority Action Items 85

0 Executive Summary

Pike County, located in the west central portion of Georgia, includes five cities: Concord, Meansville, Molena, Williamson, and Zebulon. The county is blessed with a network of major roadways, a reputable public school system, and a strong quality of life which has attracted new residents and a flurry of development activity. The impending growth led to the formation of the Pike County Water Planning Committee (PWPC) and the vision for this Pike County Water Resources Plan (Plan).

The Pike County population is expected to grow from 18,889 in 2020 to 27,655 in 2060, an impressive 46% growth rate. Most of the new growth is expected to be served by one of the six public water systems (Concord, Meansville, Molena, Williamson, Zebulon, and Pike County Water and Sewerage Authority). Two cities currently provide municipal wastewater treatment, Concord and Zebulon, and growth in these cities will be served. The intensity of development, especially in Zebulon, is expected to increase the need for wastewater treatment capacity. The forecasted increases are shown in Figure ES-1.

FIGURE ES-1: PIKE COUNTY GROWTH PROJECTIONS (2020 TO 2060)

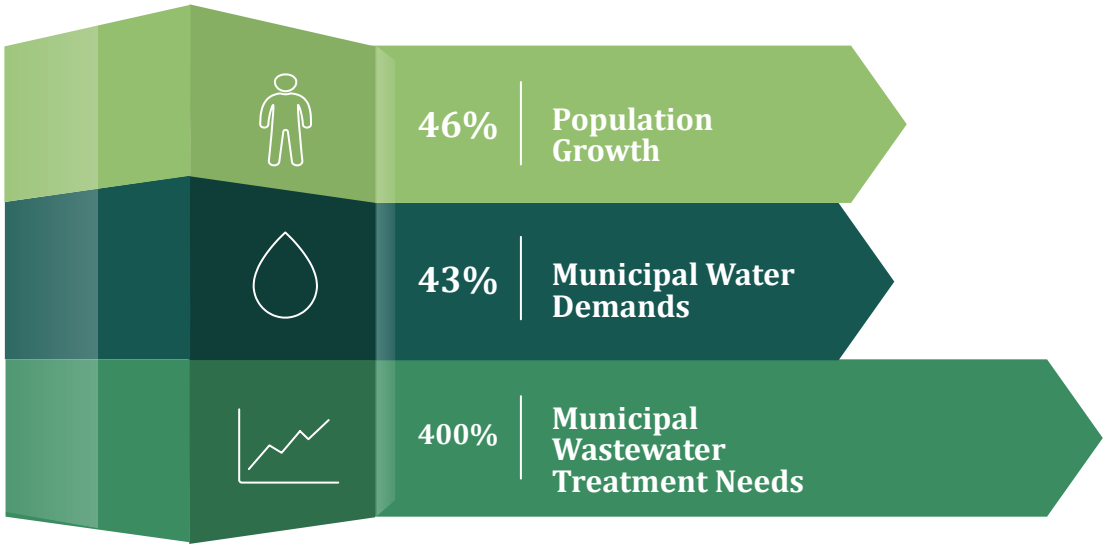

To proactively plan for the forecasted growth, each jurisdiction nominated a representative to serve on the PWPC. The PWPC met five (5) times over the course of a 2-year period to guide the development of the Plan, Figure ES-2.

FIGURE ES-2: PLANNING PROCESS

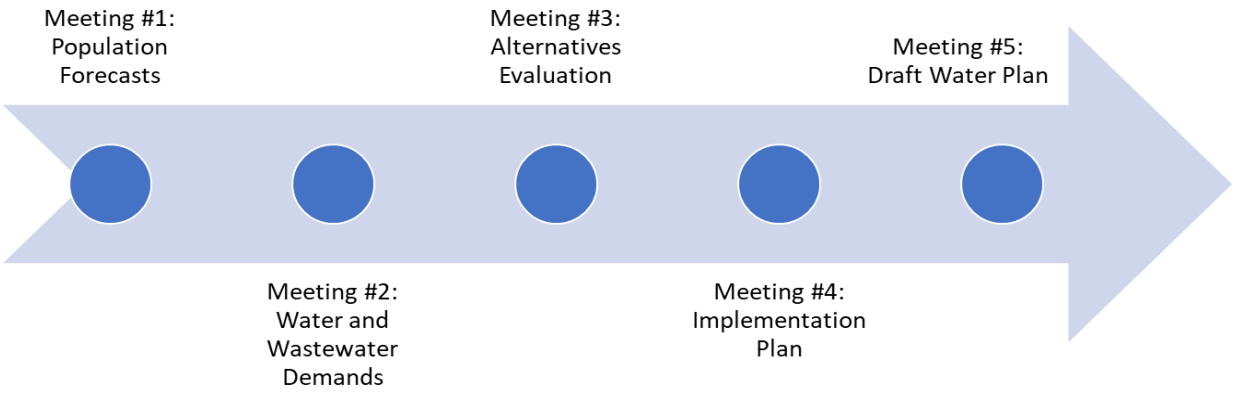

The Plan recommends that the PWPC continue to meet bi-annually to collaborate on implementation of the recommended actions.

One of the challenges during the planning process was the lack of consistent system mapping information and electronically available system data. System maps ranged from Auto-CAD to paper maps to pictures of marker boards to partial as-built records. One of the outputs of this Plan is the creation of a standard data dictionary that creates a common platform for collecting and storing asset data. This will enable each system to develop consistent local data needed for system operations and maintenance, fire flow reporting, and facilitate future shared planning efforts.

The Plan includes an extensive list of 58 action items designed to improve the existing water and wastewater systems to facilitate the future expansion to serve additional customers. The action items focus on water systems, wastewater systems, and overall action items. Each action item was assigned to an implementation timeline of priority, important, mid-range, and long range. Figure ES-3 shows the number of implementation actions included in each implementation timeline.

During meetings with the PWPC, stakeholders weighed in on which implementation actions are highest priority for their water systems. These **priority** action items are designated as bolded text throughout the document.

FIGURE ES-3: NUMBER OF ACTION ITEMS BY TIMELINE

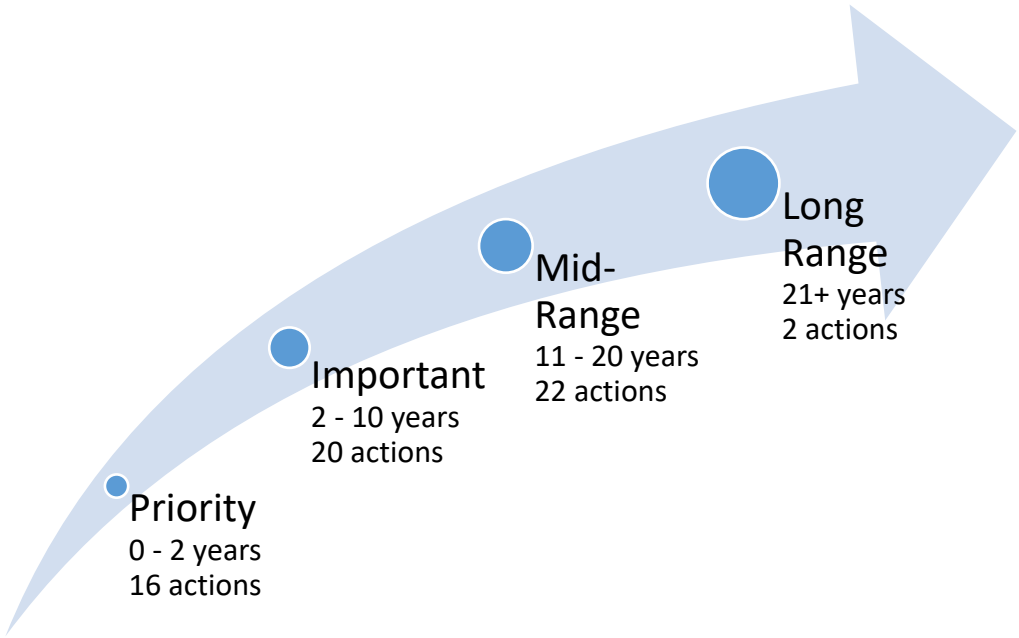

Four (4) of the **priority** recommendations are considered "overall" recommendations that apply to all six jurisdictions. The overall recommendations are listed below.

OIA1. Share and Build GIS Data

OIA3. Adopt Policies for Sustainable Growth

OIB1. Evaluate Existing Rate Structure

OIB2. Adopt Revised Rates

The first two recommendations focus on the importance of guiding future development to existing water and wastewater infrastructure to allow for sustainable system expansion. The last two action items focus on evaluating existing rates and adopting rates that fully cover the cost of operations. Water and wastewater systems must continually invest in maintenance and system rehabilitation to remain viable; thus, having sufficient revenues is critical.

There are six (6) water system priority action items, listed below, that apply to the six public water systems in Pike County.

IA1. Install Production Meters at Each Source

IA2. Identify Non-Metered Service Connections

IB1. New Supply to Meet Current Demands

IC1. Map Fire Hydrants and Pipes in GIS

IC2. Implement a Valve Assessment Program

IE2. Update Construction & Inspection Requirements

The most urgent of the water action items is the immediate need for additional water supply in Molena (**IB1**), as water demands currently exceed available supply. Additionally, Concord's demands will exceed supplies in the next decade and both Meansville and Pike County Water and Sewerage Authority will approach supply limits at the end of the planning horizon. New supplies must be identified to meet these demands.

The remaining water priority actions involve collecting data needed to implement the "Important" recommendations. Several of the "priority" and "important" action items target reducing non-revenue water (total water loss including any authorized unbilled consumption) and improving the county's fire flow ratings.

Priority actions for the wastewater systems in Concord and Zebulon include addressing current treatment facilities and planning for facility expansions anticipated within the planning horizon.

WWIA1. Concord North Pond Rehabilitation

WWIA2. Concord South Pond Rehabilitation

WWIA4. Automated Flow Monitoring of Plant Influent & Effluent

WWIC1. Identify Priority Infiltration & Inflow Sewersheds

WWIC2. Assess Priority Sewersheds

WWID1. Update Construction & Inspection Requirements

Rehabilitation of the aging collection system is a priority and can reduce the amount of groundwater/surface water that enters the system and must be treated. Data collection and planned operations and maintenance are also themes for the priority wastewater action items.

The local investment in water supply and wastewater treatment is significant, yet critical to meet the current and future needs within Pike County. The immediate investment to meet current needs and in measured improvements to current operations and maintenance programs will allow the water and wastewater systems to meet the future demands.

1 Background and Introduction

This section includes background information that serves as a basis for the planning process and the Plans' recommendations. A review of historical population trends and population forecasts are presented in this section.

1.1 Location

Pike County is in the west central portion of Georgia (Figure 1-1). There are five cities located within Pike County: Concord, Meansville, Molena, Williamson, and Zebulon (Figure 1-2). Pike County is largely rural, and its residents value the strong sense of community. Residential and commercial development is expected during the planning horizon due to the location along transportation corridors, strong public school system, and recent economic development activities. The five cities and the county have partnered to create this Pike County Water Resources Plan (Plan) to look strategically at the existing water and wastewater treatment systems and identify actions needed to prepare the existing infrastructure for this future growth.

FIGURE 1-1: PIKE COUNTY LOCATION MAP

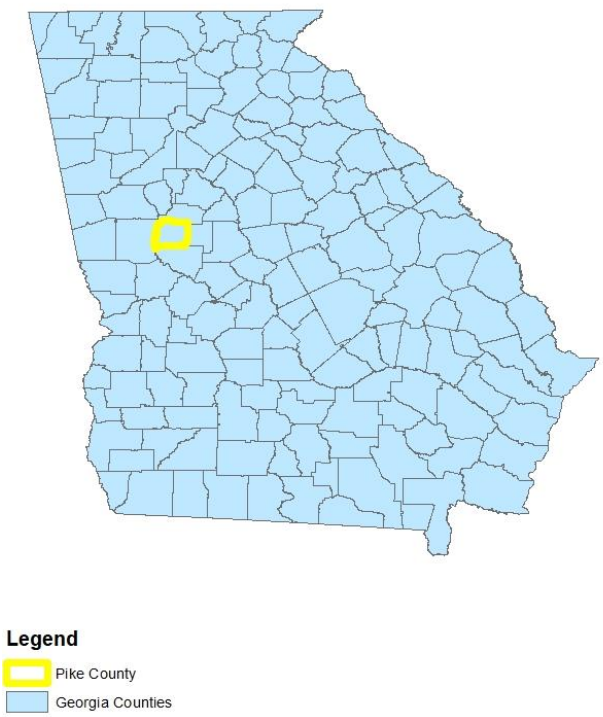

FIGURE 1-2: PIKE COUNTY

1.2 Planning Process

The planning process included input and guidance from the Pike County Water Planning Committee (PWPC), which included representatives from each of the cities as well as the county. The PWPC met five (5) times during the planning process (Figure 1-3) to review draft work products and guide the recommendations that are reflected within this Plan.

FIGURE 1-3: PLANNING PROCESS

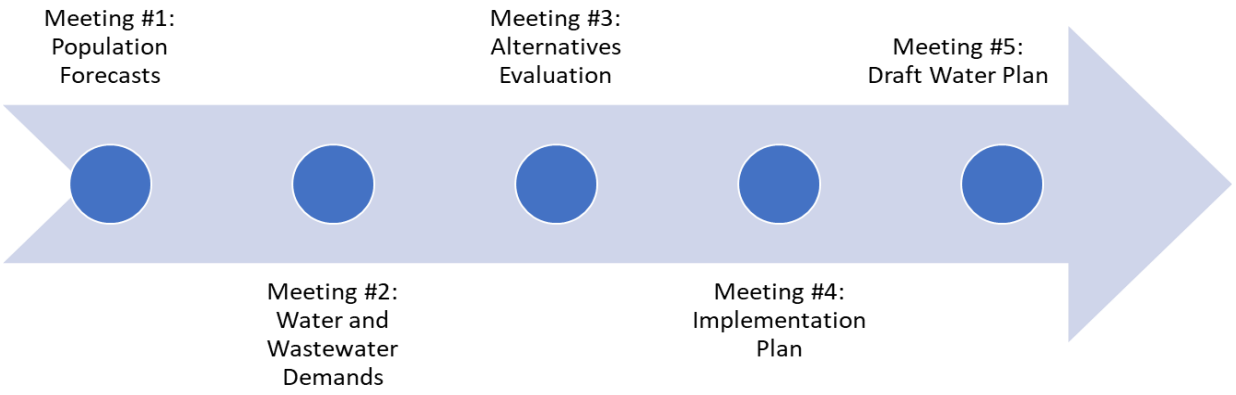

Section 4.5 of this Plan recommends that the PWPC continue to meet bi-annually to collaborate on ongoing implementation of this Plan. In addition to providing an opportunity to gather data and confirm assumptions for the Plan, these meetings offered a chance for each system to collaborate and share expertise. The need to collaborate and share expertise extends beyond the planning process.

1.3 Population Projections

The population in Pike County is 18,889 according to the 2020 US Census Bureau data, an almost 6% increase from 2010. As shown in Figure 1-4, there has been steady population growth in Pike County since 1950 with small periods of slower growth followed by periods of more rapid growth. The average growth rate is 18% from 2000 to 2020 while the overall trend from 1950 to 2020 is at 10% growth. The growth pressures are present locally, with an increase in development activity that the PWPC members believe will continue.

FIGURE 1-4: HISTORIC POPULATION TRENDS

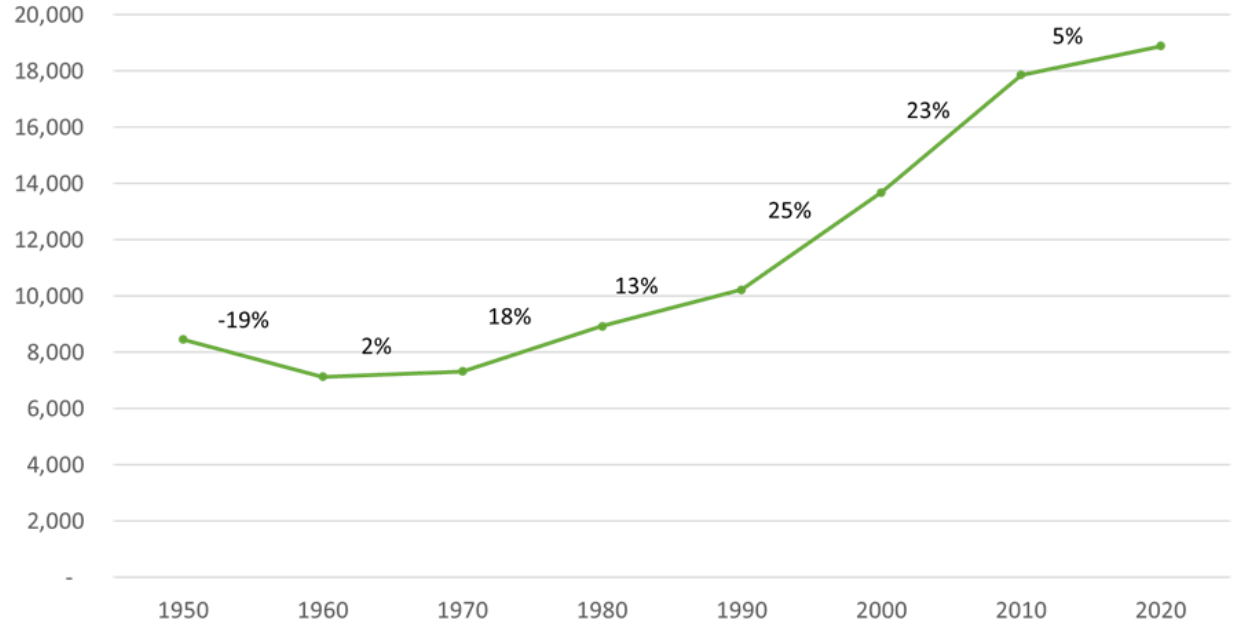

The PWPC reviewed seven potential growth scenarios that ranged from rapid growth to declining growth as described below and shown in Figure 1-5.

- Scenario 1: Upper Flint Regional Water Planning Council forecasts with even growth rates among the cities and unincorporated county.
- Scenario 2: Population growth based on recent trends (2010 to 2018) for each community, resulting in populations higher than the Upper Flint Regional Water Plan.
- Scenario 3: Upper Flint Regional Water Planning Council with growth distributed based on historical growth patterns among the cities and unincorporated county.
- Scenario 4: Office of Planning and Budget Forecasts, which show a slight decline in population over the planning horizon.
- Scenario 5: Growth Scenario with a steady 10% per decade population increase distributed among the cities and unincorporate county.
- Scenario 6: Griffin 2050 Water Master Plan
- Scenario 7: Growth Burst Scenario ends at the same population in Scenario 5 but includes a “burst” of growth by 2040 followed by a period of steady growth through 2060. This mimics the historical population growth that includes periods of more rapid growth followed by periods with steady growth.

FIGURE 1-5: POPULATION PROJECTION SCENARIOS

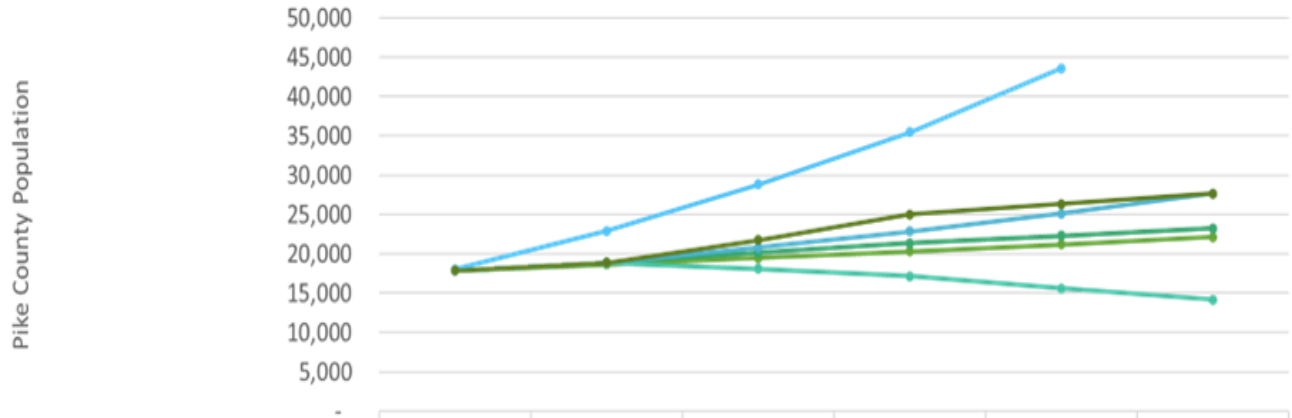

	2010	2020	2030	2040	2050	2060
Scenario 1: UF, Even Distribution	17,869	18,860	20,147	21,335	22,276	23,262
Scenario 2: Recent Trend	17,869	18,647	19,461	20,313	21,205	22,138
Scenario 3:UF Variable	17,869	18,860	20,147	21,335	22,276	23,262
Scenario 4: OPB Decline	17,869	18,814	18,119	17,174	15,584	14,146
Scenario 5: Growth Scenario	17,869	18,889	20,778	22,856	25,141	27,655
Griffin 2050 Water Master Plan	18,064	22,931	28,815	35,438	43,582	
Scenario 6: Growth Burst Scenario	17,869	18,889	21,722	24,981	26,318	27,655

Based on the growth trend over the last 20 years and the active development projects, the PWPC dismissed the one growth scenario with declining population and the scenarios with stagnant population. Similarly, the Griffin 2050 Master Plan growth was significantly greater than current population numbers and was dismissed from further consideration. Scenario 5 and Scenario 6 were closely reviewed by the PWPC at two meetings. After careful review and consideration, the growth burst scenario was seen as the most probable based on historic development patterns, planned growth, and recent development patterns. The population projections from the Growth Burst Scenario (Figure 1-6) were used throughout the plan to project future water demands and wastewater treatment needs.

FIGURE 1-6: POPULATION PROJECTIONS

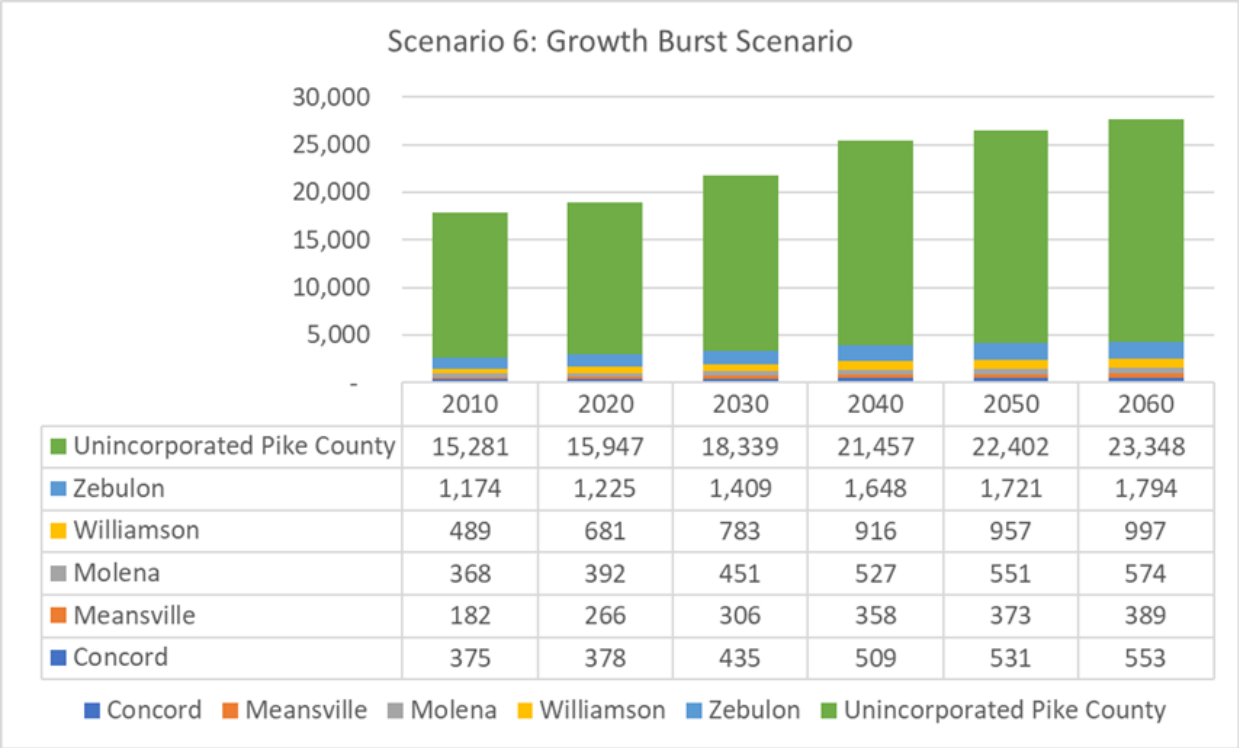

	2010	2020	2030	2040	2050	2060
Unincorporated Pike County	15,281	15,947	18,339	21,457	22,402	23,348
Zebulon	1,174	1,225	1,409	1,648	1,721	1,794
Williamson	489	681	783	916	957	997
Molena	368	392	451	527	551	574
Meansville	182	266	306	358	373	389
Concord	375	378	435	509	531	553

1.4 Anticipated Growth Patterns

Each city and the unincorporated county have a Comprehensive Land Use Plan and zoning map that govern the intensity of development that is allowed within the jurisdiction. These Comprehensive Land Use Plans are currently being updated by the communities with the support of the Three Rivers Regional Commission. The sustainability of the water and wastewater systems in Pike County is dependent on an infrastructure-based approach to growth within the Comprehensive Land Use Plan and Zoning Ordinance.

Using the current Comprehensive Land Use Plans and feedback from the Pike Water Planning Commission, the intense growth is expected to occur in the areas shown in Figure 1-7. Generally, growth is expected to extend out from the existing water and wastewater infrastructure and along major roadway corridors, specifically US 19 and Hwy 18. Understanding the expected development pattern was important during the evaluation of alternatives.

FIGURE 1-7: ANTICIPATED FUTURE GROWTH AREA

1.5 Insurance Services Office (ISO) Rating Program

One of the goals of this Plan is to improve the Insurance Services Office (ISO) Public Protection Classification (PPC) score in Pike County by 1 rating from the current Class 5 rating. The PPC score rates the community's readiness for fire prevention and fire suppression. The community score, along with features specific to each individual property, influence the property insurance premiums paid by individual homeowners and businesses. This section provides an overview of the ISO Rating Program and a summary of the most recent Pike County scores.

The PPC scoring system assigns points to different desirable actions with up to 100 points possible. The points translate to a "grade" from 1 to 10, with Class 1 being the

"best" in terms of fire prevention and fire suppression programs (90 or more points) and a Class 10 being the baseline for all communities (0 to 9.99 points). Each Class is separated by 10 points. Therefore, the goal of reducing the PPC by 1 translates into adding programs or policies that would result in 10 additional points. Figure 1-8 shows the number of communities across the US that fall within each rating class as well as the range of scores for that class.

FIGURE 1-8: NUMBER OF US COMMUNITIES BY FIRE PREVENTION AND PROTECTION CLASS

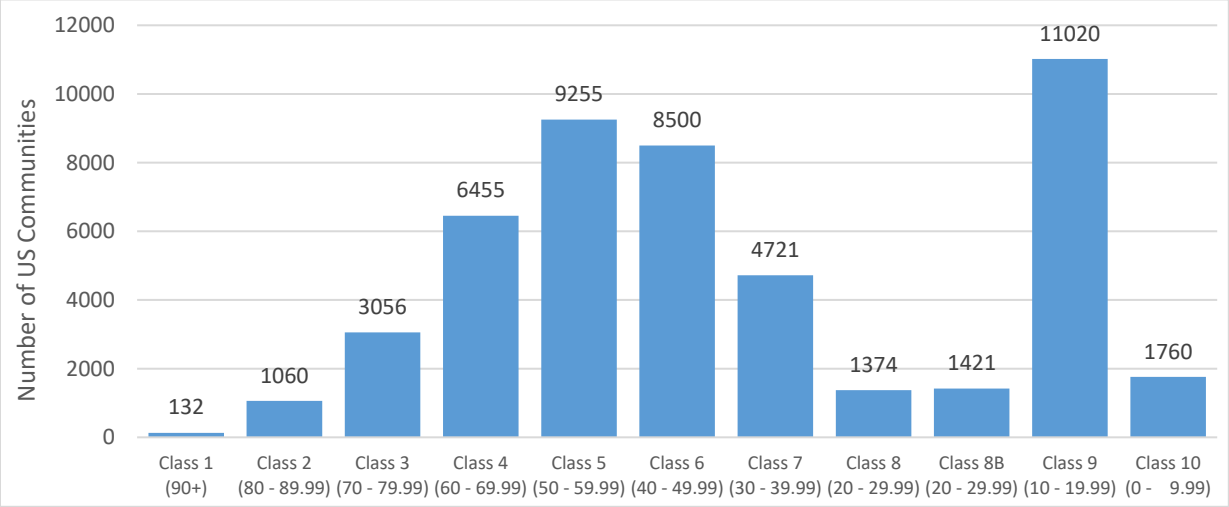

The points are assigned to three main categories, with a specific percentage of the total points assigned to each, as shown in Figure 1-9.

FIGURE 1-9: PUBLIC PROTECTION CLASSIFICATION (PPC) PERCENTAGE OF POINTS BY CATEGORY

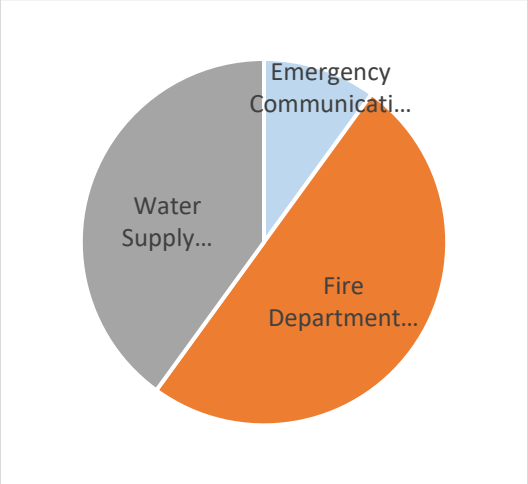

Pike County's PPC Score from May 2016 provided the baseline for the evaluation in this Water Resources Plan. Table 1-1 shows the points earned by each category as well as the percentage of the total points earned from that category.

Table 1-1. PPC Score by Category

PPC Category	Points Earned	Total Points for Category	% Total Points Earned
Emergency Communications	7.06	10	71%
Water Supply	21.27	40	53%
Fire Department	21.89	50	44%

The PPC Rating Score for Pike County was 50.22 points, which is within Class 5. Pike County ranks within the top 40% of all communities in the US in terms of fire prevention and suppression programs. The alternatives evaluation described in Section 3 targeted recommendations based on the county's current scores.

1.6 Current Rate Structures

This Plan included an evaluation of the existing water and wastewater rates as these rates are the foundation of a healthy water and sewer system. The evaluation compared the current rates for the water systems within Pike County to several neighboring water systems. While each system should establish rates based on their unique circumstances to cover the cost of providing services, it is helpful to compare system fees. This comparison leveraged the Georgia Environmental Finance Authority (GEFA) 2022 GA Water and Wastewater Rates Dashboard and used a standard consumption level of 5,000 gallons per month. Figure 1-10 shows that the water rates in Pike County are generally the same or lower than the surrounding systems. Figure 1-11 shows that the wastewater rates are also generally the same or lower than the surrounding systems.

FIGURE 1-10. WATER BILLS BASED ON 5,000-GALLON CONSUMPTION

FIGURE 1-11. WASTEWATER BILLS BASED ON 5,000-GALLON CONSUMPTION

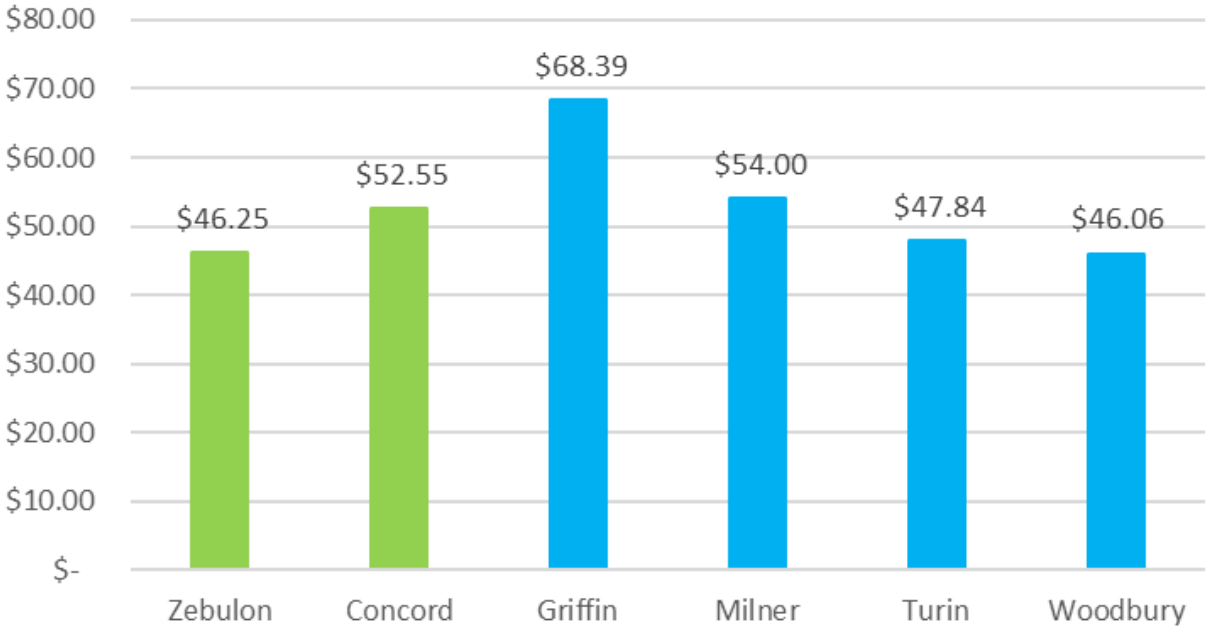

The dashboard also presents the cost recovery for each system in Pike County. The cost recovery is the operating revenues divided by the operating expenses (including depreciation and amortization). The cost recovery ratio should be greater than one. If the cost recovery is less than one, that indicates that the provider is spending more on system operations than they are receiving as rates. The cost recovery rates for the Pike County systems are presented in Table 1-2.

Table 1-2. Cost Recovery Ratio by Provider

Provider	Cost Recovery Ratio
Williamson	1.11
Meansville	1.04
Molena	0.97
Zebulon	0.85
Concord	0.60
Pike County WSA	N/A*

** Pike County WSA did not provide financial data for this survey*

Another important consideration when discussing water and sewer rates is affordability. Affordability refers to the ability of customers to pay for water and sewer service and reflects the annual water and wastewater bill divided by the annual median household income in that community. There is no accepted definition of “affordable rate” but generally a combined water and sewer rate that is 3% or less of the median household income is considered “affordable”. All Pike County systems have rates below 3% of their median household income, Figure 1-13.

FIGURE 1-13: WATER AND WASTEWATER RATE AFFORDABILITY

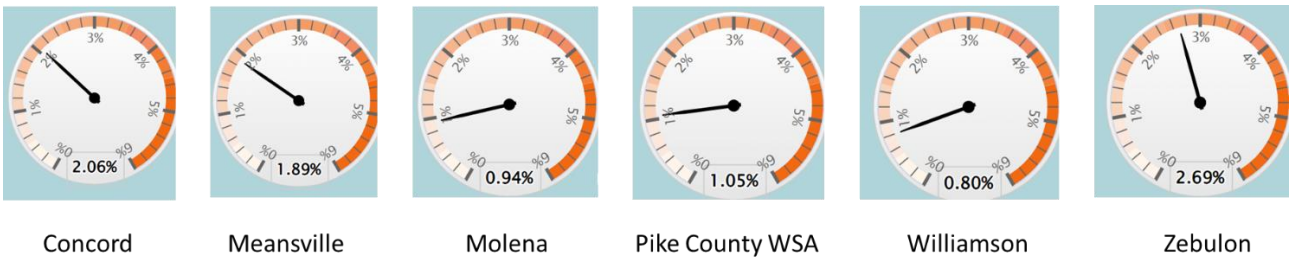

1.7 Upper Flint Regional Water Plan

Pike County is within the Upper Flint Water Planning Region, one of eleven water planning districts in Georgia. The Upper Flint Region includes thirteen (13) counties and is in the central-western portion of the state (Figure 1-14). The 2017 Upper Flint Regional Water Plan was created by representatives from the region who served on the Upper Flint Regional Water Planning Council and outlines strategies to meet the region's water and wastewater needs through 2050.

FIGURE 1-14: PIKE COUNTY WITHIN THE UPPER FLINT REGIONAL WATER PLANNING DISTRICT

One of the goals of this Plan is to be consistent with the priorities within the Upper Flint Regional Water Plan. Several priorities that were factored into this Plan are listed below.

- DM2 – Non-farm water conservation practices.
- SF1 – Evaluate storage options to provide supply and flow augmentation.
- SF3 – Replace surface water withdrawals with groundwater withdrawals.
- RM1 – Treatment systems with high return flows.

The Upper Flint Regional Water Plan is currently being reviewed and updated. While the Plan includes efforts to remain consistent and supportive of the Regional Plan, the PWPC would like the more detailed information and projections developed through this planning process to be factored into the Regional Plan update.

2 Existing Systems and Future Demands

This section provides an overview of the existing water and wastewater systems within Pike County as well as the forecast of future water and wastewater demands by system.

2.1 GIS Mapping

The existing water and wastewater infrastructure serves as the foundation for the Plan and therefore, water and wastewater system maps are important. System maps are also critical for the effective management of water and wastewater systems. A consistent mapping software and platform was not available, so a mapping platform with consistent terminology was created as part of the planning process.

Appendix B includes the data dictionary for the PWPC members that will support the migration toward consistent maps across each water and wastewater provider, which will support future planning efforts. The data dictionary is based on ESRI's Water Distribution Utility Network and Sewer Utility Network. ArcGIS was selected as the platform as it interacts with a wide range of other mapping tools (AutoCAD, Diamond Maps, etc.) and is used by the Three Rivers Planning Commission, so system data can be used within the ongoing Comprehensive Land Use Planning process.

The feature types included in the Water Distribution Data Dictionary are listed below.

Mains	Storage	Hydrants
Service Lines	Pump Stations	Meters
Supply	Valves	Backflow

The feature types included in the Wastewater Data Dictionary are listed below.

- Discharge
- Treatment Plants
- Pump Stations
- Manholes
- Force Mains
- Gravity Mains
- Septic Systems

Each feature type above is a different tab in the data dictionary spreadsheet and includes details that describe that feature. The goal of the data dictionary is to allow for continuous improvement of mapped data over time following the consistent methodology.

The data dictionary was presented at the second PWPC meeting and the PWPC provided concurrence with the use of the data dictionary for the project. The system data collected from the PWPC members varied greatly from AutoCAD, paper maps, and pictures of marker boards. Due to the time and budget constraints, the data that was available in a mapping format (AutoCAD) was converted into ArcGIS following the data dictionary format based on available data. The pictorial maps were roughly digitized for planning purposes only. Data gaps will need to be filled by each system. Systems without baseline maps should digitize their system maps following the data dictionary. A common mapping platform with consistent terminology will facilitate future planning and implementation efforts for the PWPC members.

2.2 Existing Water Supply Sources and Distribution Systems

Each city and the unincorporated county have their own water distribution system that conveys potable water to their customers. Some of the systems also have their own water supply, while several systems rely on wholesale water purchase agreements. This section outlines the current water supply sources and distribution systems.

2.2.1 Current Water Supply Sources

The active water supply sources are listed by water provider in Table 2-1 and shown in Figure 2-1. There are currently 7 active wells, two communities that primarily purchase water from the City of Griffin (Williamson and Zebulon), and other interconnections to serve specific service areas or for emergency water supply purposes.

The interconnections with Griffin by Williamson and Zebulon are governed by a contract that ends in 2045. These contracts require that Griffin be the sole treated water supplier. The City of Concord’s contract expires in 2055 and is for supplemental and/or emergency use, allowing the City to use existing water supply sources or consider other water supply sources.

Table 2-1. Current Water Supply Sources by Provider

Provider	Active Water Supply Sources	Estimated Yield
Concord	Concord-Spring Road Well Spring Road Spring Griffin Interconnection	0.18 MGD 0.0252 MGD NA[1]
Meansville	Well #1 (Hwy 109) Well #3 (Collier Ave)	0.0288 MGD[2] 0.108 MGD
Molena	Well #2 (Springs Street)	0.0288 MGD
Pike County WSA	Well #1 (Midway Road/ Lewis Lake) Well #2 (Shackleford Road)	0.144 MGD[3] 0.069 MGD[3]
Williamson	Griffin Interconnection	< 2.0 MG/ month[4]
Zebulon	Griffin Interconnection (2 connections)	<12.0 MG/month[5]

1. Per Concord Wholesale Agreement, notification for non-emergency demand >100,000 gpd
2. Well #1 not operational at estimated yield due to pump
3. GW Permit #114-0001 limits withdrawal to 0.207 MGD (monthly and annual average)
4. Per Williamson Wholesale Agreement (June 28, 1996)
5. Per Zebulon Wholesale Agreement (July 23, 1996)

FIGURE 2-1. ACTIVE PRIMARY WATER SUPPLY SOURCES

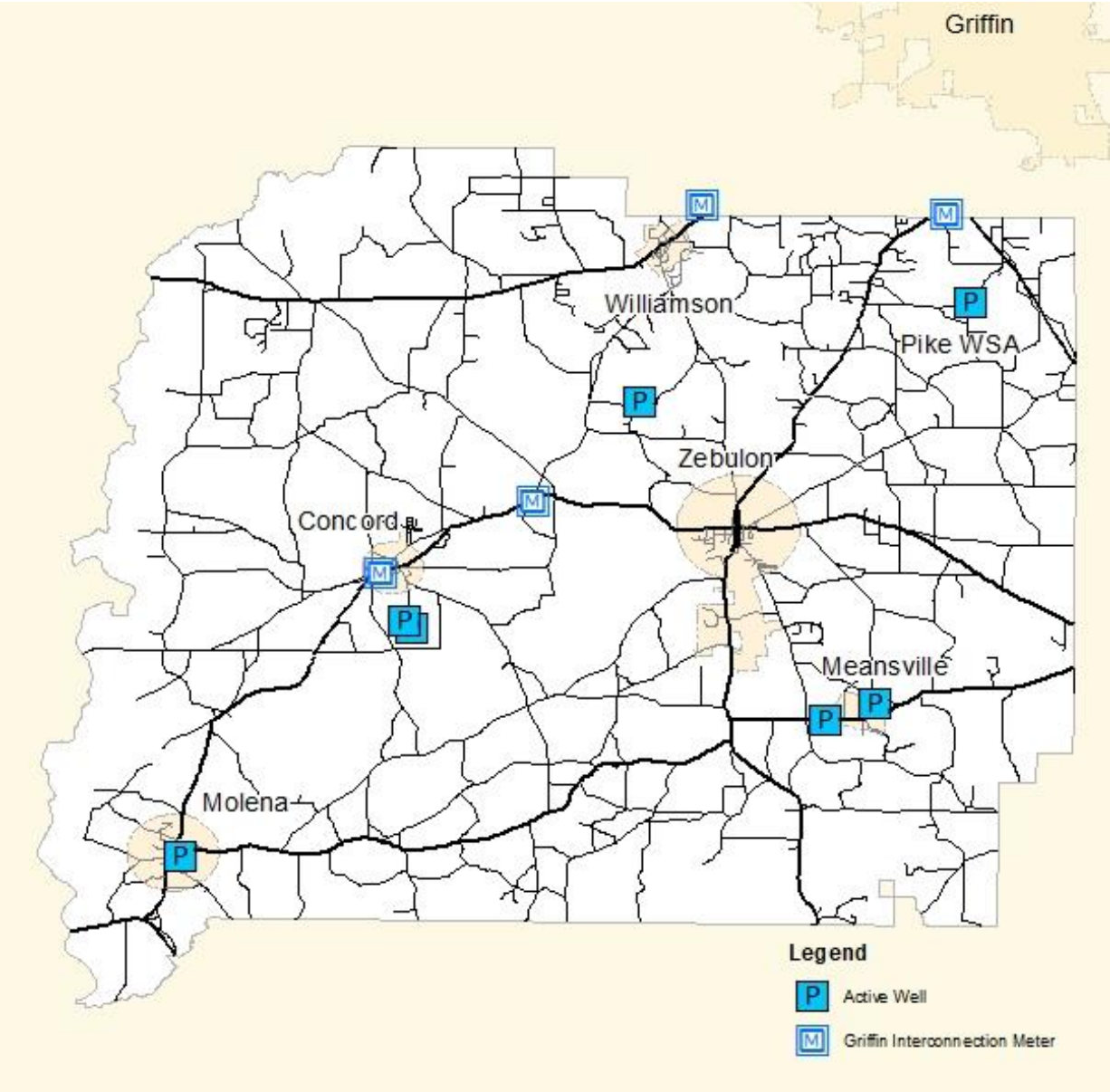

2.2.1.1 Emergency Water Supply Sources

In addition to the primary water supply sources listed above, there are several system interconnections that provide supplemental water and/or serve as an emergency water source. Figure 2-2 shows the current flow of water available during an emergency or water shortage in green arrows. While there is no strict standard for an emergency water supply source, generally an emergency supply would meet half of the daily demand for a period of three days.

FIGURE 2-2. EMERGENCY WATER SUPPLY INTERCONNECTIONS

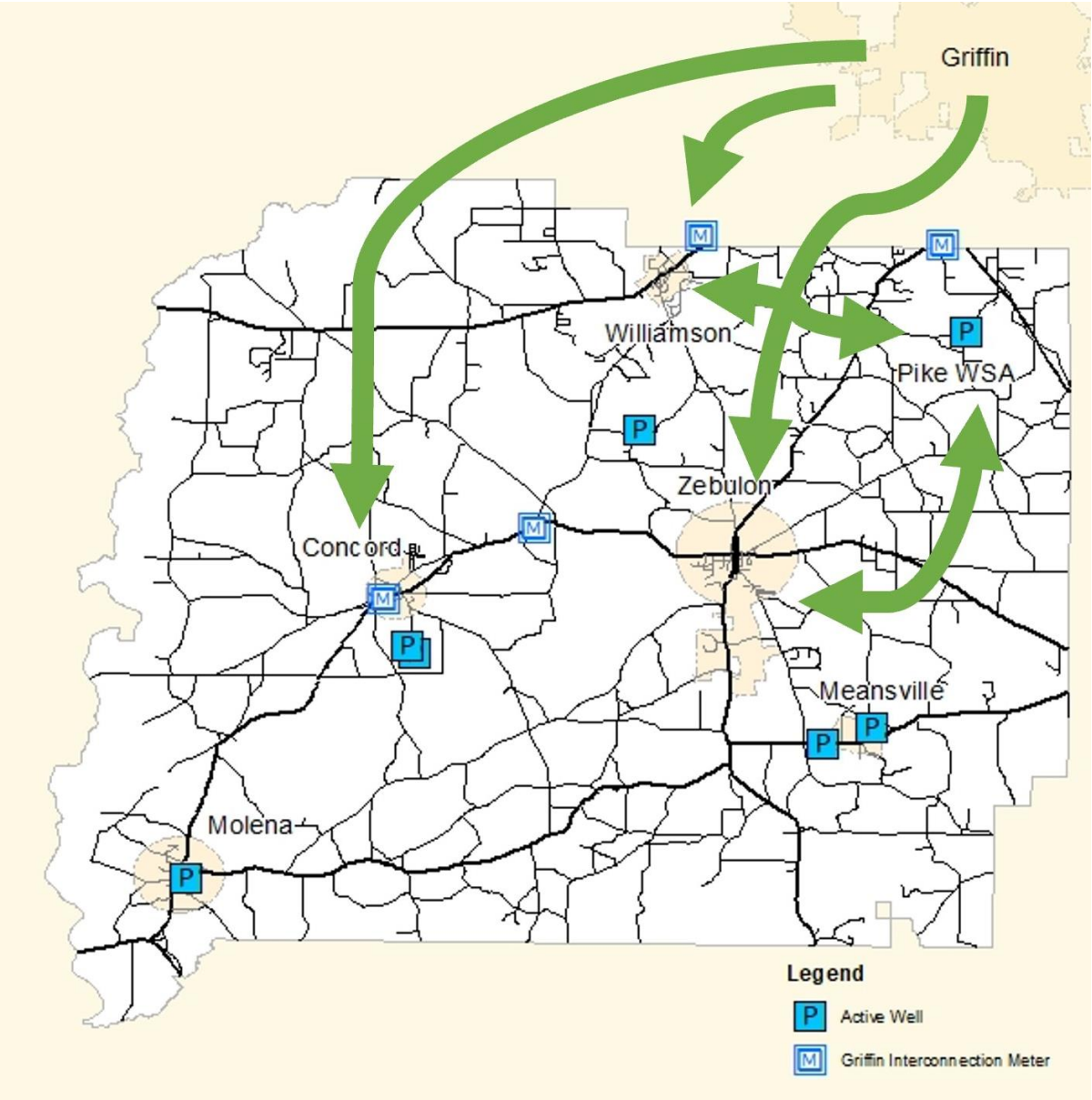

2.2.2 Distribution Systems

The independent water systems in Pike County manage over 250 miles of distribution pipelines that deliver safe drinking water to approximately 1,500 customers. The distribution networks include an integrated array of assets including storage tanks, valves, pump stations, meters, and fire hydrants that distribute potable water from the source to each customer.

As presented in Section 2.1, none of the existing water distribution systems were mapped in GIS but systems with AutoCAD data available were converted to GIS. The distribution pipelines available in paper format or on a marker board only were roughly digitized to show the scale of the known systems. Figure 2-3 shows the water pipelines that were converted or roughly digitized, but is not a comprehensive view of the water distribution systems. Additional GIS data collection and digitizing is needed to create a comprehensive network of infrastructure.

FIGURE 2-3. MAPPED WATER DISTRIBUTION PIPELINES

Challenges within the distribution systems in Pike County are common to most city distribution systems. Non-Revenue Water (NRW) is specifically defined to include the sum of specific types of water loss and any authorized, unbilled consumption that occurs within water distribution systems. NRW includes water lost through leaks but also water consumed through un-metered connections. NRW is very specific to each system, but all efforts to reduce NRW contribute toward a more sustainable water system.

The other common challenge is aging distribution system pipes and assets. Programmed maintenance can defer rehabilitation of the distribution system, but a capital improvement program to rehabilitate aging assets will still be needed.

2.2.3 Inactive Water Supply Sources

In addition to the seven (7) active wells in Pike County, there are ten (10) inactive wells. These wells are inactive due to a variety of reasons ranging from the failure of a primary pump to water quality issues that require additional filtration, to conflicts with the sole source Griffin water supply contracts. The inactive wells are shown in Figure 2-4.

FIGURE 2-4. INACTIVE WATER SUPPLY WELLS

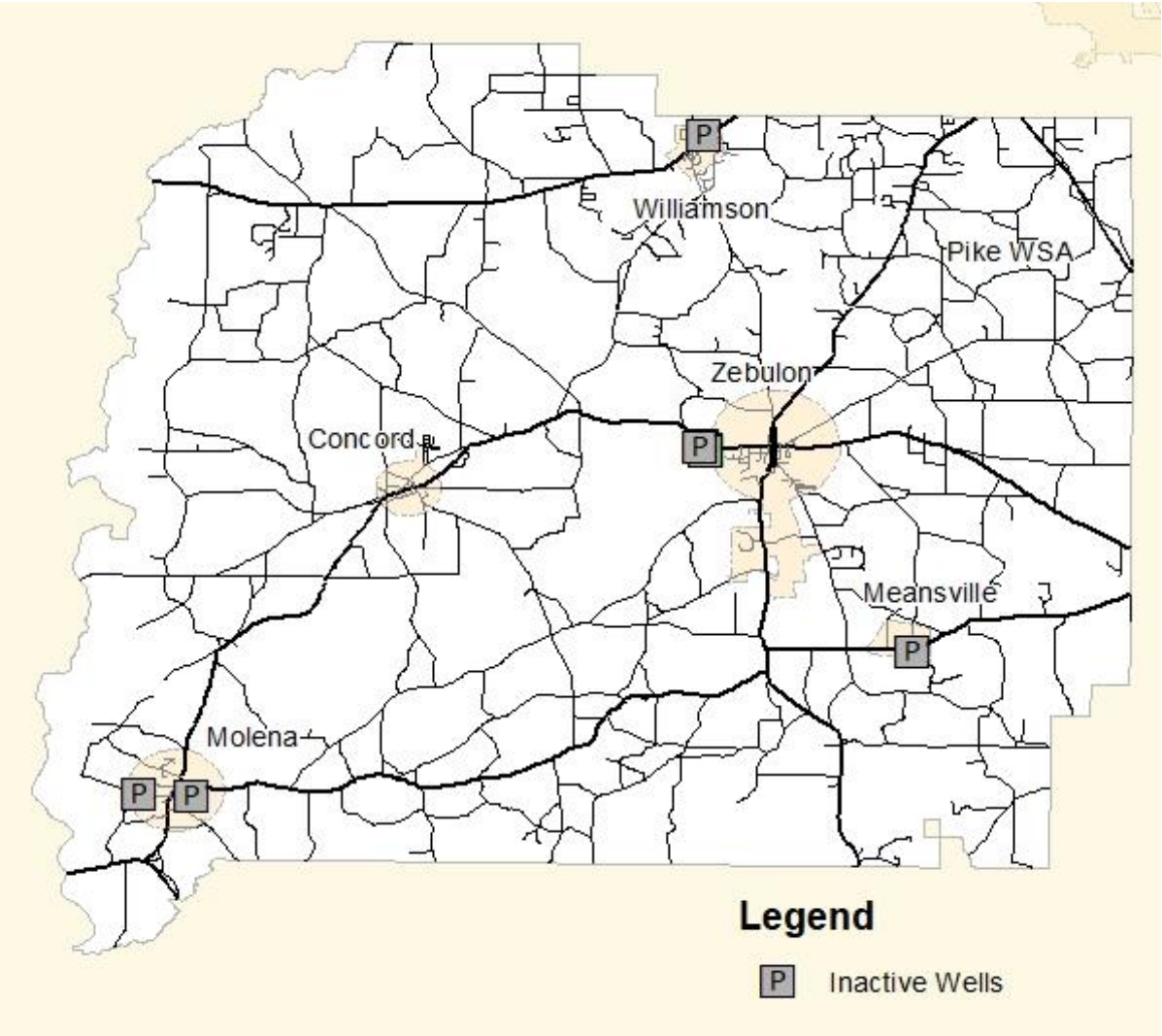

2.3 Existing Collection Systems and Water Reclamation Facilities

The city of Zebulon and city of Concord operate municipal wastewater collection and water reclamation systems. The remainder of Pike County is served by private wastewater systems as described in Section 2.4.

2.3.1 Collection Systems

The collection system is the collection of pipes, lift stations, manholes, force mains, and other control structures that collect and convey wastewater from homes and businesses

to the treatment facilities described in Section 2.3.1. This section presents the known information for the two collection systems in Pike County.

Common collection system challenges include inflow and infiltration (I&I) and aging assets. I&I refers to excess rain or groundwater that enters sewer collection pipes through infiltration (such as seepage through damaged pipes or manholes) and/or rain-derived inflow (rapid flow such as through cross-connections, water that pours into manhole covers, etc.). Cross connections can include stormwater pipes and private sources such as yard/roof drains, cooling towers, and condensate lines that are connected to the municipal sewer system. While local plumbing codes often preclude these cross connections, pipelines may be relocated and/or systems modified in a manner that changes the flow. Excess water in the wastewater system can result in sanitary sewer overflows (SSOs) that allow untreated sewage into local streams, treatment water quality issues due to overwhelming flows and lack of balance in treatment levels, and higher energy and treatment costs.

Both systems should clearly define what portion of the collection system is publicly maintained, including lower laterals. A lower lateral is the section of the lateral between the property line and the connection point to public sewer. Lower laterals can be a source of I&I thus it is important to clearly establish maintenance responsibility.

The other common and related challenge is aging infrastructure. Similar to the water distribution system, a consistent maintenance program can extend the life of collection system assets. However, each wastewater system needs to plan for the rehabilitation of aging pipelines and other assets.

2.3.1.1 City of Concord Collection System

Concord has a map of the collection system on a marker board that is periodically updated and serves as a resource for managing the system. This plan recommends digitizing the system in GIS following the data dictionary presented in Appendix B to support future planning efforts.

Concord is currently receiving higher than expected flows from the Hilltop area within the city limits, indicating I&I issues. Much of the collection system infrastructure in this part of town was recently replaced and the city is working to identify the source of the water that appears to be flowing into the system from a non-sewered source. Other areas within the collection system are older and near or past their expected life and may require rehabilitation.

2.3.1.2 City of Zebulon Collection System

Zebulon has a collection system map that was converted from AutoCad to GIS, shown in Figure 2-5. There are currently 4.9 miles of force main and 16.5 miles of sewer line in the collection system. There are some concerns on the eastern portion of the collection system of excessive I&I entering into the collection system that must be treated.

The city has plans to expand the collection system to serve future development. The recently constructed Veterans Affairs facility is expected to bring an influx of commercial uses. These commercial uses are expected to generate a higher volume of wastewater than single-family homes. Plans include extending the collection system to the northern city limits along US19/SR 3 to serve approximately 749 acres of mixed commercial and medium-density residential areas. The service would include approximately 1,325 feet of 8-inch and 1750 feet of 10-inch gravity sewer mains, a duplex lift station with 10 horsepower pumps, and 3,850 feet of 8-inch force main. Zebulon was unable to secure ARPA funds for this project but has applied for a GEFA Clean Water State Revolving Fund loan to prepare the system for these future demands.

FIGURE 2-5. WASTEWATER COLLECTION SYSTEMS

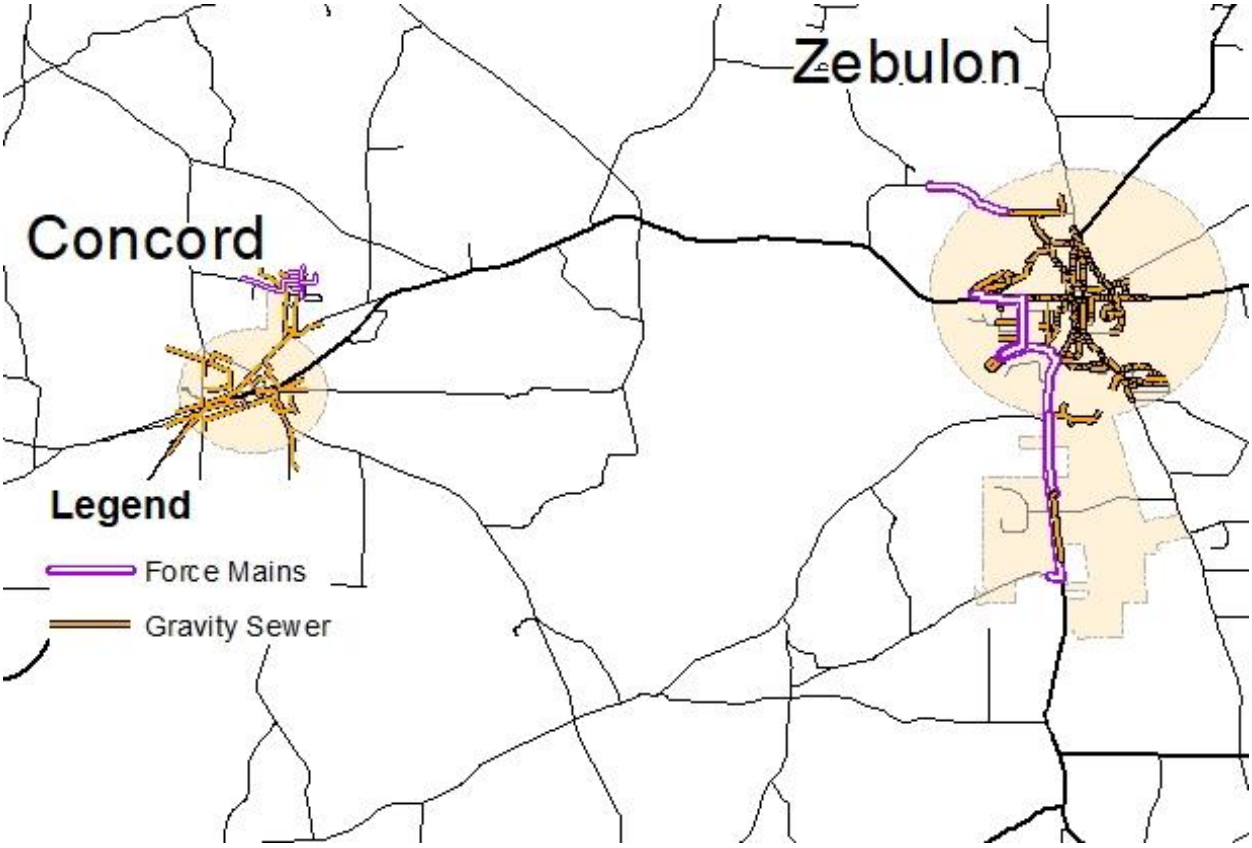

2.3.2 Water Reclamation Facilities

There are three water reclamation facilities in Pike County. Two are operated by the city of Concord and one by the city of Zebulon. Zebulon's treatment includes two phases, a water reclamation facility and a land application facility that are in two different places. The facilities are shown in Figure 2-6 and described by system below.

FIGURE 2-6. WATER RECLAMATION FACILITIES

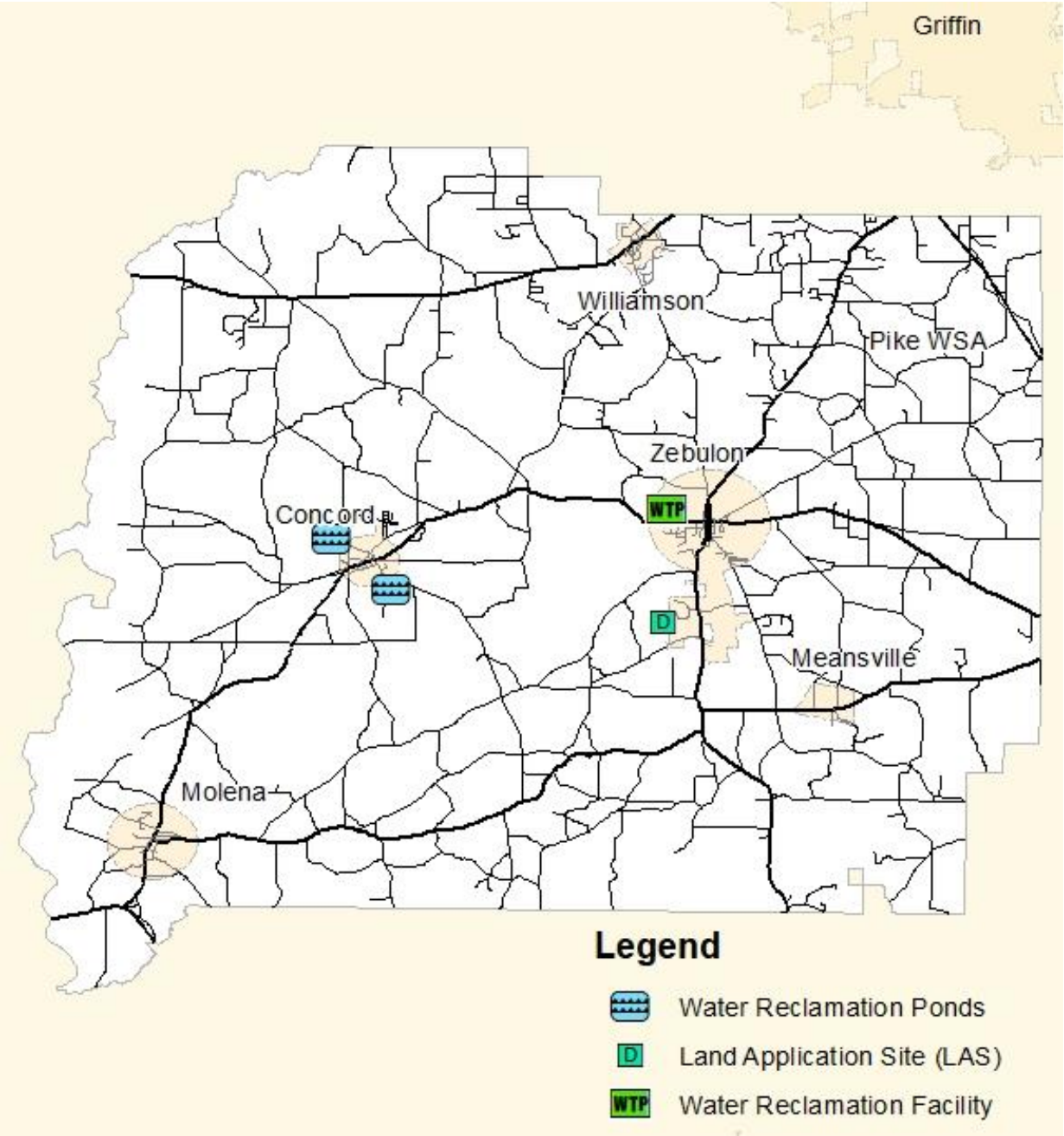

2.3.2.1 City of Concord Water Reclamation Facilities

The City of Concord operates two water reclamation oxidation ponds, the North Pond, and the South Pond facilities that are described in Table 2-2 below.

Table 2-2. City of Concord Water Reclamation Facilities

Facility	Permit #	Receiving Water	Approx. Size	Discharge Limit (monthly avg flow)
North Pond	GA0025461	UNT to Birch Creek	1.75 acres	0.038 MGD
South Pond	GA0025470	UNT to Elkins Creek	9.0 acres	0.10 MGD

The North Pond facility has received several recent notices of violation from the Georgia Environmental Protection Division (EPD). While these compliance issues have either been addressed or are currently being addressed, the issues provide for system understanding and are described below.

In 2019, the city received a letter of noncompliance and determined that erosion from the unnamed tributary surrounding the North Pond had eroded a portion of the dam surrounding the pond. The erosion compromised the integrity of the pond and required a Corrective Action Plan (CAP). The city completed the CAP with assistance from a GEFA emergency loan, and completed the actions outlined in the CAP to address the erosion around the dam.

Concord also applied for and received American Recovery Plan Act (ARPA) funds to address treatment issues at North Pond following several letters of non-compliance for exceeding biological oxygen demand (BOD) limits, total suspended solid (TSS) limits, and fecal coliform bacteria limits. The ARPA project includes the installation of two aerators and baffle curtains in a y-configuration to extend the treatment time and improve water quality. The project also includes the installation of an influent screen and efforts to control the duckweed and watermeal. These actions will also improve the pond functionality and protect water quality. Completion of the ARPA project is a high priority for this Plan (**WWIA1** presented in Section 3).

The South Pond is a larger facility and includes both an aeration pond and a polishing pond with a chlorine contact treatment prior to discharge. While this pond has not experienced the violations of the North Pond, there is some sludge accumulation and duckweed/ watermeal growth that will need to be addressed to maintain permit compliance.

2.3.2.2 City of Zebulon Water Reclamation Facility

The city of Zebulon operates one wastewater treatment plant that currently discharges to a land application site (LAS).

Table 2-3. City of Zebulon Water Reclamation Facilities

Facility	Permit #	Receiving Water	Approx. Size	Discharge Limit (monthly avg flow)
Zebulon LAS	GA0049476	LAS Town Branch	72.9 acres	0.499 MGD LAS 0.286 MGD discharge

In Zebulon, wastewater flows are first treated at a Wastewater Pollution Control Plant (WPCP) and then sent to a pond system with bar screen, aeration, and chlorination. From there, treated wastewater is discharged to a Land Application System (LAS), which is a series of irrigation lines that spray treated wastewater into a wooded area for final polishing treatment.

In addition to the LAS, Zebulon has a permitted discharge to Town Branch that will meet the near-term future demands. The city is currently not using the direct discharge option.

2.4 Septic Systems

Most of the households and businesses in Pike County are served by private, on-site sewage management systems (i.e., septic systems). Septic systems, if properly designed and maintained, are an environmentally sound treatment alternative where municipal sewer service is unavailable.

Septic system designs and installations are reviewed and approved by the Pike County Environmental Health Department within the Georgia Department of Public Health. The *Rules for On-site Sewage Management Systems* (Department of Public Health, Chapter 511-3-1) govern the minimum standards for design and installation of septic systems.

The Department of Public Health created a well and septic tank GIS map to better track the location of permitted septic systems. This database was built based on available septic tank records. The database shows 1,578 septic systems in Pike County, however

once mapped only 1,225 septic systems were located within Pike County (Figure 2-7). There are 9,690 parcels in Pike County and approximately 450 parcels are served by sanitary sewer in the cities of Concord or Zebulon. While some of the parcels are likely vacant, the number of actual septic systems in Pike County may be as high as 7,500 systems, meaning the location of most of the septic systems is unknown.

FIGURE 2-7. KNOWN SEPTIC SYSTEMS FROM PIKE COUNTY ENVIRONMENTAL HEALTH

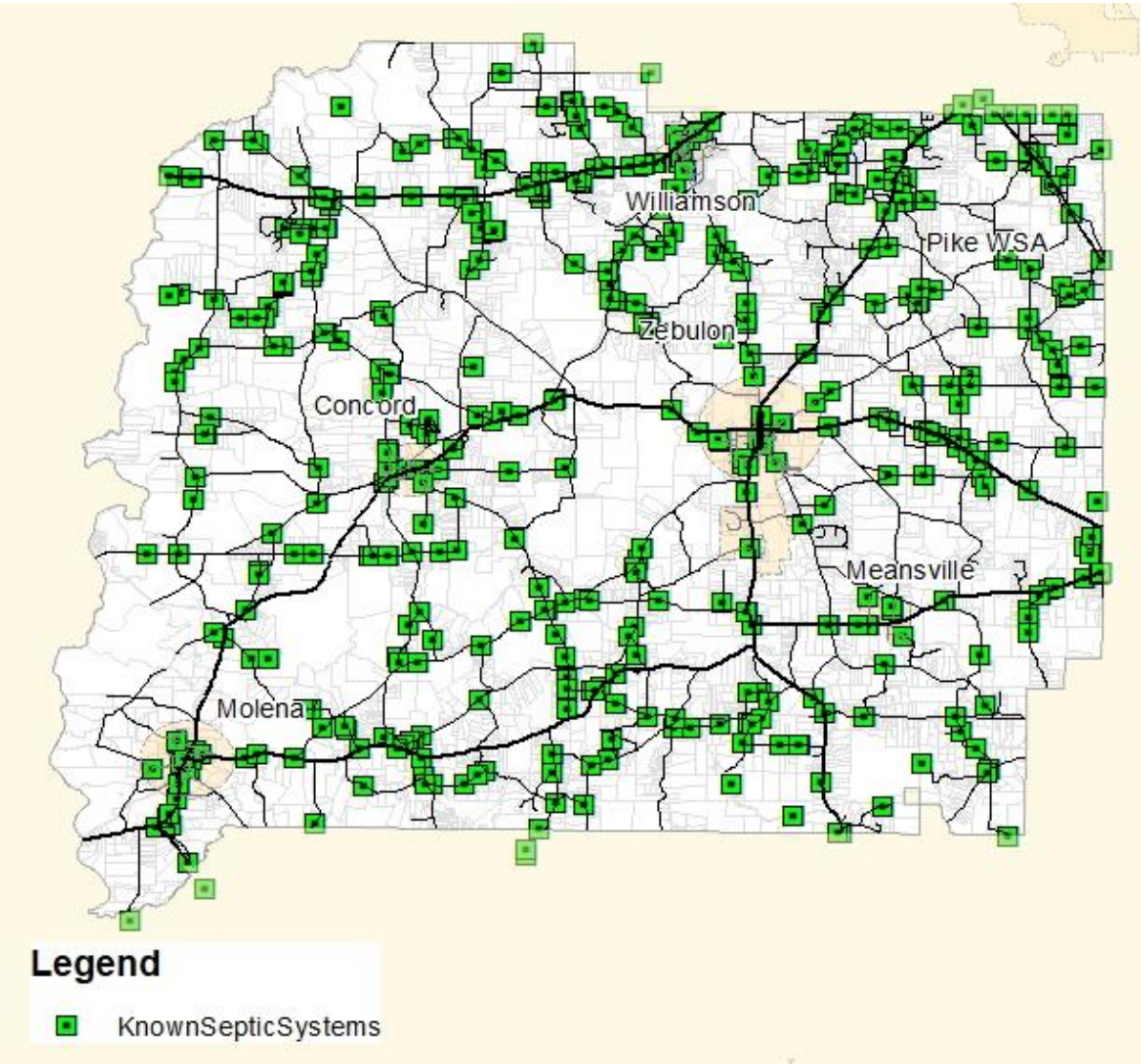

The PWPC noted that septic system failures are not a common or pervasive issue at present. Most parcels have sufficient land to build a new drainfield that is outside of sensitive areas and compliant, if needed. As new development occurs in Pike County, it

is important to ensure the development regulations and policies consider the future rehabilitation needs associated with septic systems in areas that are not sewered, especially if new lots are smaller than existing lots.

Septic systems require periodic maintenance and pumping of accumulated septage. Currently, septage is accepted at the Concord South WPCP facility, which has the needed screening and aeration. Concord accepts up to 2 loads of septage per day with each load capped at 2,000 gallons/load. Currently, Concord receives approximately 3 to 4 loads per week. It will be important to monitor the effluent quality and adjust the number of loads accepted to ensure required treatment levels are achieved. Future wastewater treatment projects in both Concord and Zebulon should consider the local septage demands when designing upgrades or expansions. Fees charged for accepting septage should fully recoup the cost of service.

2.5 Water Demand Forecasts

The water demands are calculated following the formula in Figure 2-8. The methodology received concurrence from the PWPC at the first meeting. The population projections presented in Section 1.3 provide the baseline and were adjusted to account for the percentage of the population served by the water system versus served by private well. The daily per capita water use was based on locally available data where provided. Where data was not provided, the Upper Flint Regional Water Plan value of 171 gallons per capita per day (gpcpd) was used. The commercial and industrial water demand was based on available billing records and future projections tied to the expected shift in patterns based on community input. Non-revenue water was 20% unless local data demonstrated a lower or higher number was appropriate. The inputs by water provider are provided in Table 2-4.

FIGURE 2-8. WATER DEMAND FORECASTING METHODOLOGY

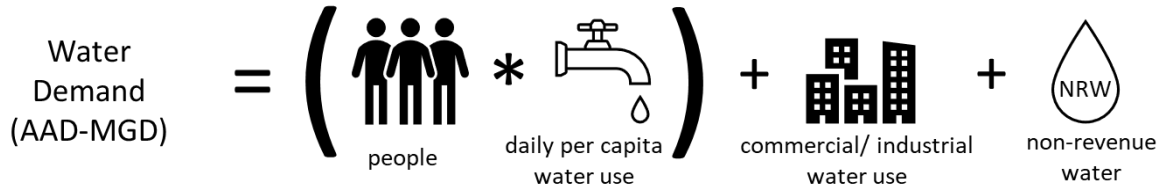

Table 2-4. Water Forecast Inputs by Community

Provider	Daily Per Capita Water Use (gpcpd)	Non-Revenue Water (%)
Concord	150	30%
Meansville	150	50% → 20%
Molena	60	20%
Pike County WSA	171	20%
Williamson	73	20%
Zebulon	150	10%

The water forecasts for each water provider in Figure 2-9 through Figure 2-14, compare the demand forecasts to the available current water supply. The presentation allows a comparison of whether sufficient supply is available for future needs. The communities that exclusively purchase water from Griffin are not presented with an available water supply limit, as the contracts permit significantly more water than current demand.

FIGURE 2-9. CONCORD WATER DEMAND FORECASTS

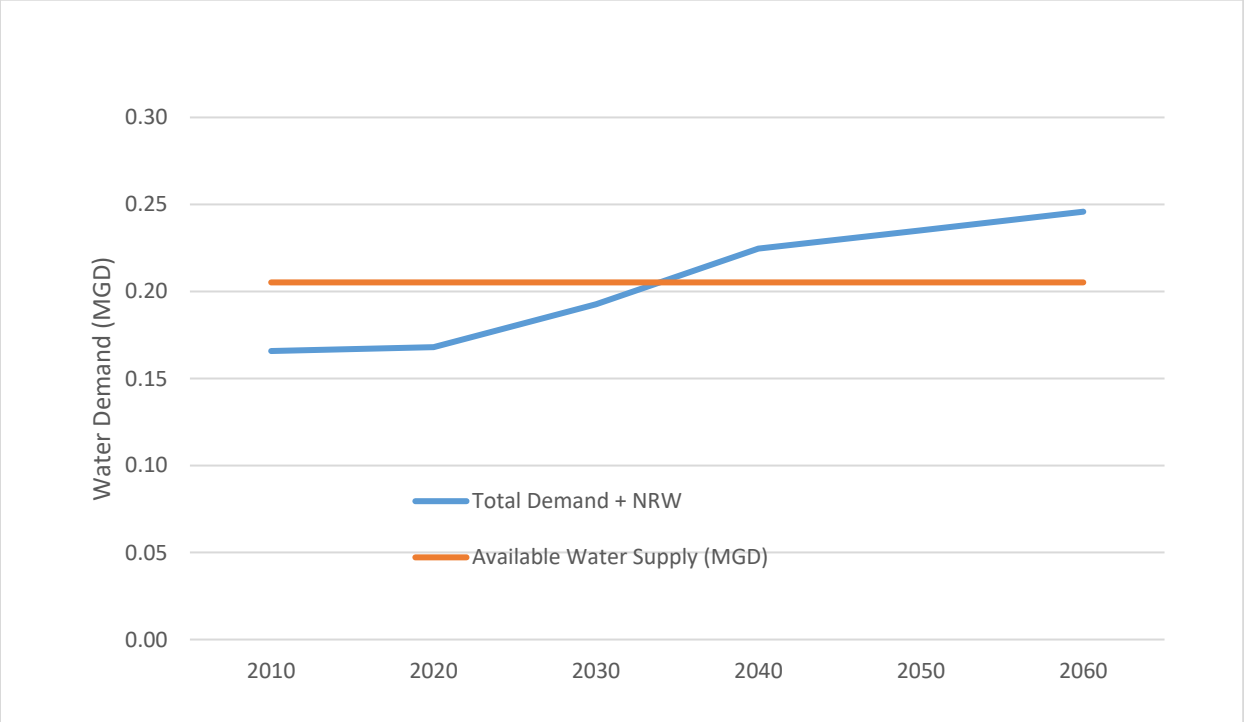

FIGURE 2-10. MEANSVILLE WATER DEMAND FORECASTS

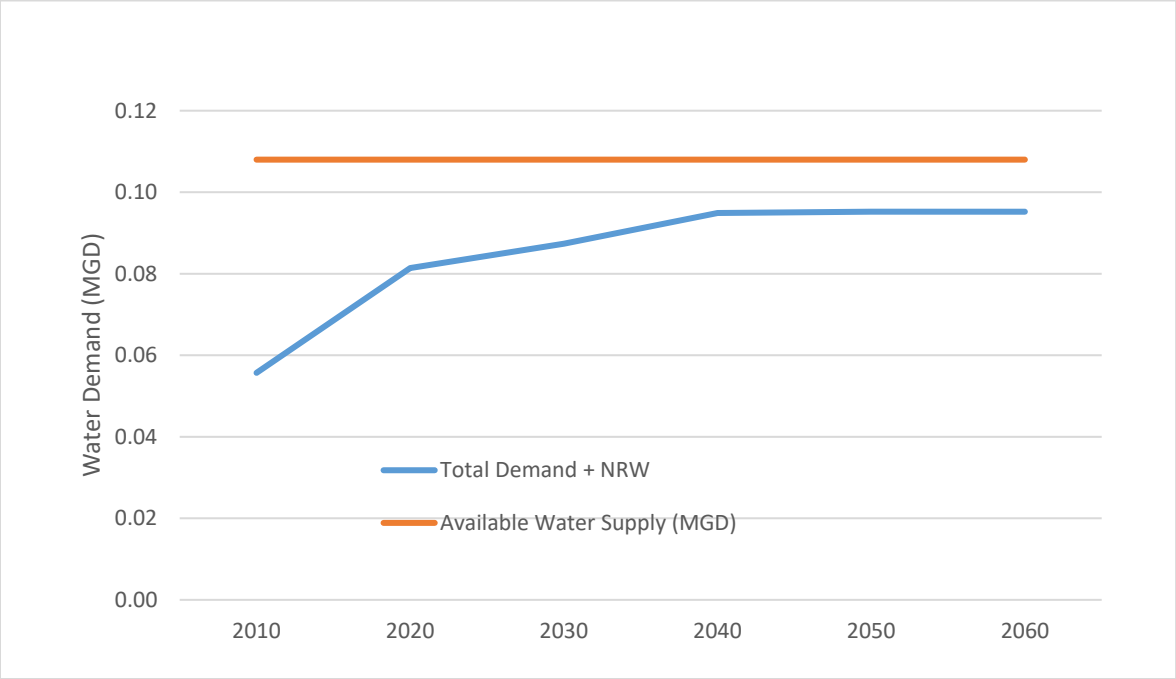

FIGURE 2-11. MOLENA WATER DEMAND FORECASTS

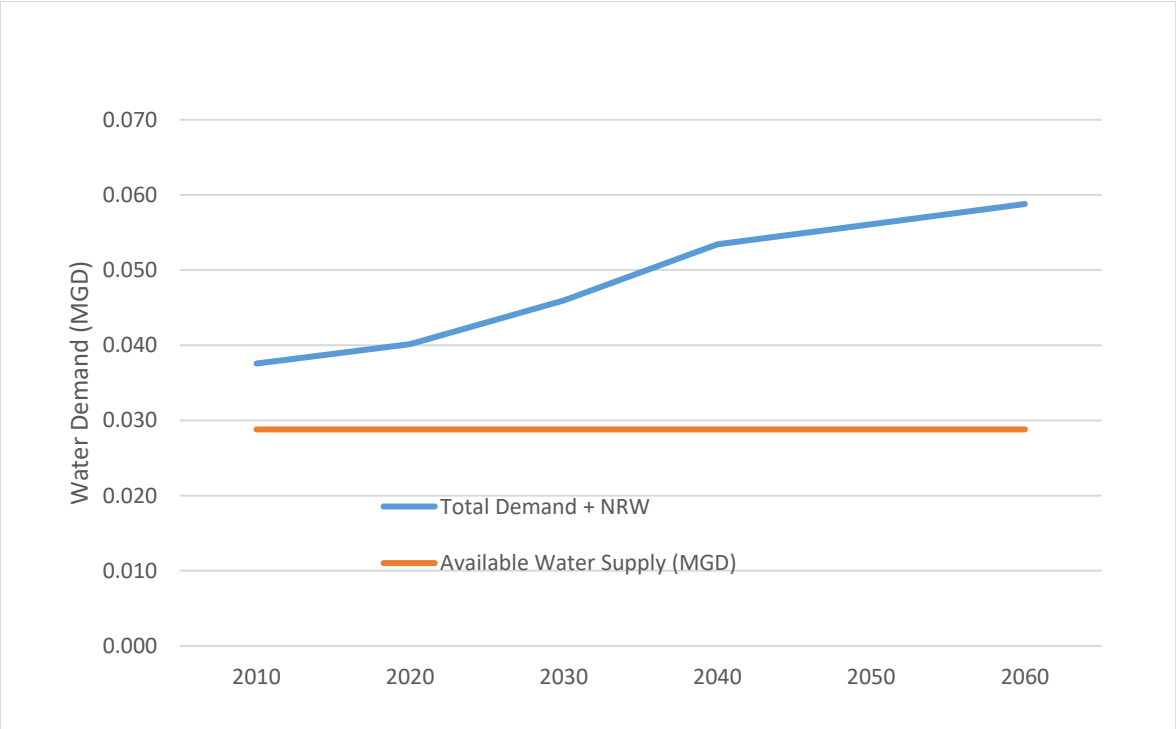

FIGURE 2-12. WILLIAMSON WATER DEMAND FORECASTS

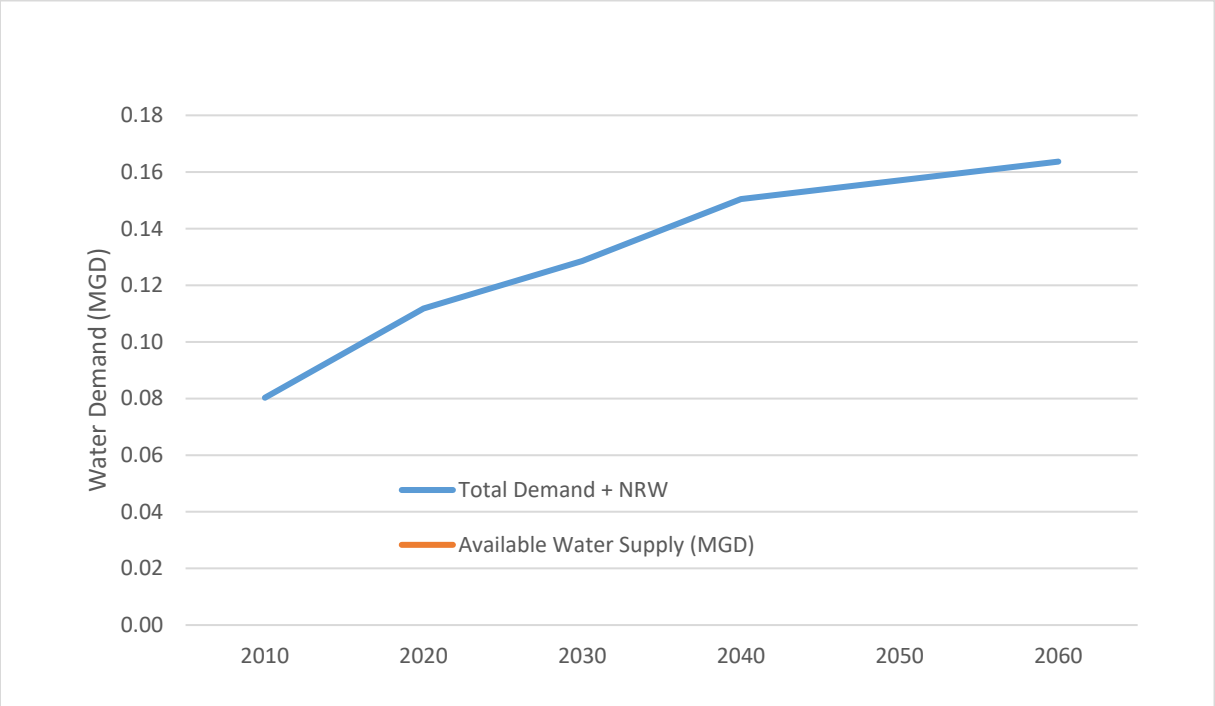

FIGURE 2-13. ZEBULON WATER DEMAND FORECASTS

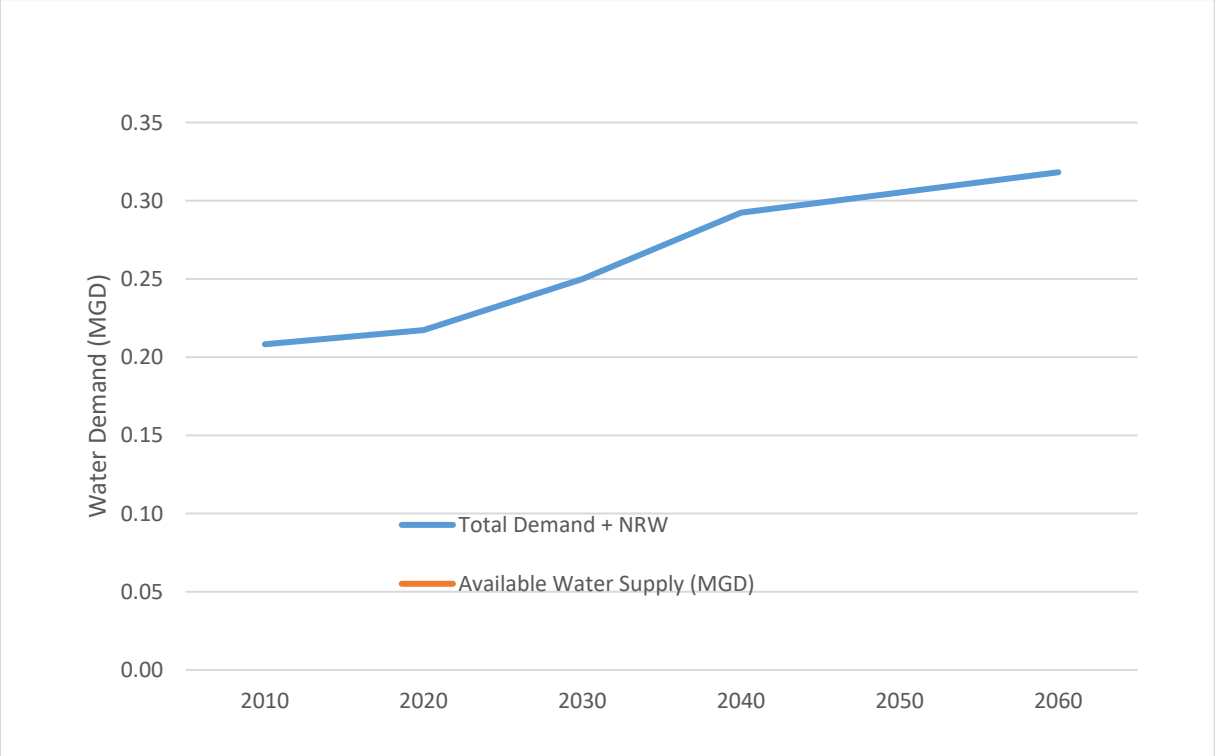

FIGURE 2-14. PIKE COUNTY WATER & SEWER AUTHORITY WATER DEMAND FORECASTS

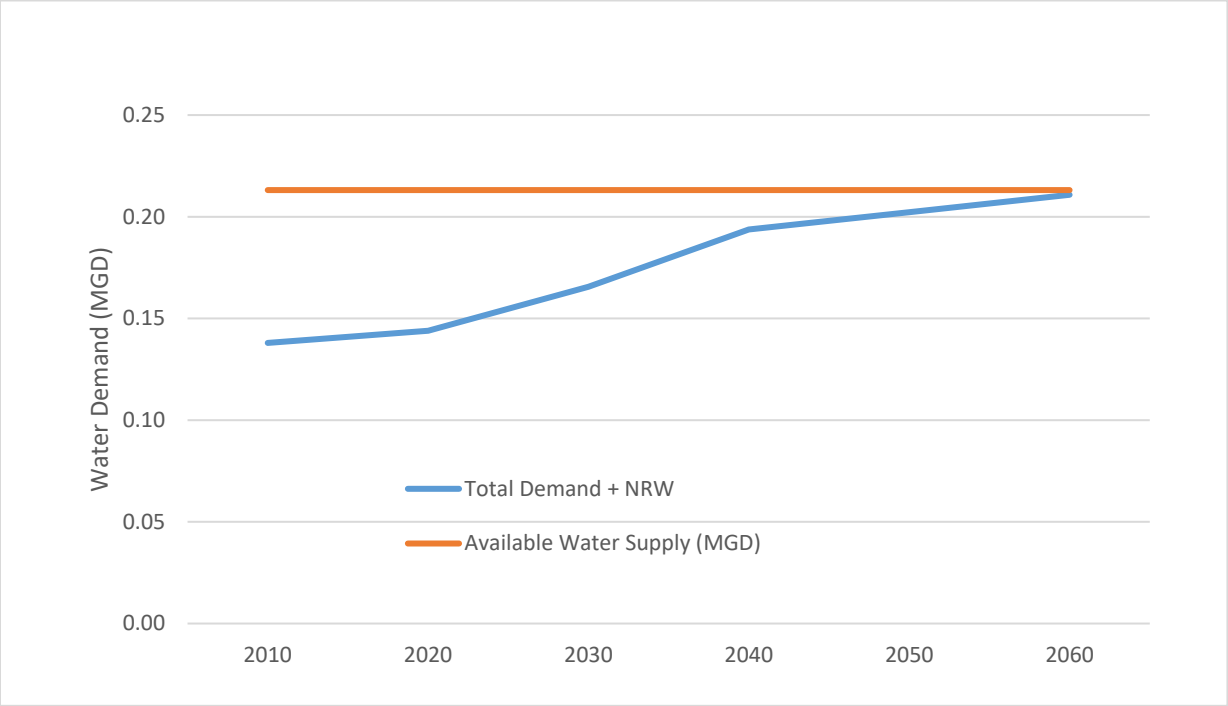

Currently, Molena's water demand exceeds the available supply. Concord exceeds its current water supply by 2040, and Meansville and Pike County Water and Sewerage Authority approach their demand in 2060. These communities will need to consider alternative water supply sources which will likely include a combination of new wells and/or interconnections as well as an emphasis on reducing NRW.

2.6 Wastewater Flow Forecasts

The wastewater flows to the water reclamation facilities are calculated following the formula in Figure 2-15. Wastewater generated in homes and businesses will be treated either at a water reclamation facility for those connected to the Concord or Zebulon systems or by a private septic system. The municipal flows are forecasted to determine if the existing facilities can treat current and future flows. Septic flows are presented in Section 2.7.

Wastewater flows use the water demands calculated in Section 2.5 as well as assumptions presented in Table 2-5 and described below. The PWPC concurred that the following planning assumptions were appropriate.

- Outdoor Water Use: Outdoor water does not flow to the water reclamation facility for treatment and therefore is removed from the indoor water demands. A conservative estimate of 20% of total water use is for outdoor purposes was used.
- Commercial Demands: There are very few commercial customers, and the type of commercial customers is expected to change. Flows were based on planned development data provided by each wastewater system.
- I&I: Inflow data was not available to estimate I&I, therefore an industry benchmark of 20% of the annual average wastewater flows was used.
- Peaking Factor: Influent flow data was not available to calculate the maximum flows received at the water reclamation facility, therefore a 25% peaking factor was used.

FIGURE 2-15. WASTEWATER FLOW FORECAST METHODOLOGY

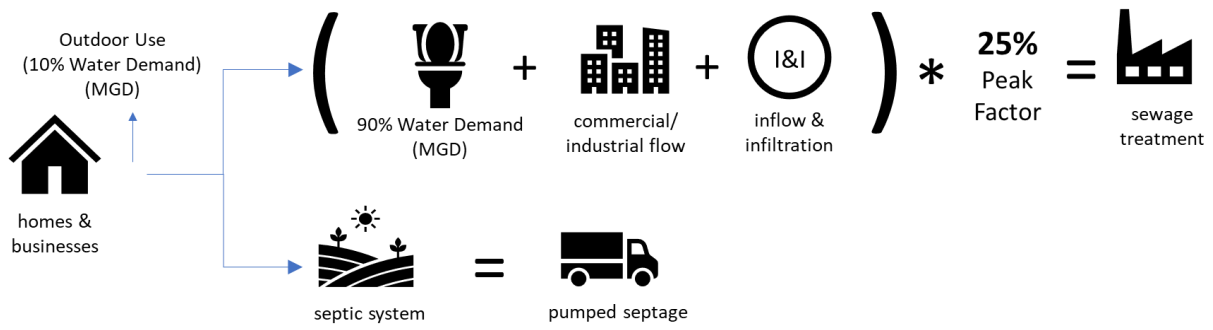

Table 2-5. Wastewater Flow Inputs by System

Provider	% Population Sewered	Inflow & Infiltration (I&I)	Treatment Peaking Factor
Concord	60% → 80%	20%	25%
Zebulon	80%	20%	25%

The wastewater flow forecasts for Concord and Zebulon are compared to the permitted treatment to determine if sufficient treatment is available for future flows. Both systems will need to expand treatment capacity to meet the expected wastewater flows.

FIGURE 2-16. CONCORD WASTEWATER FLOW FORECASTS

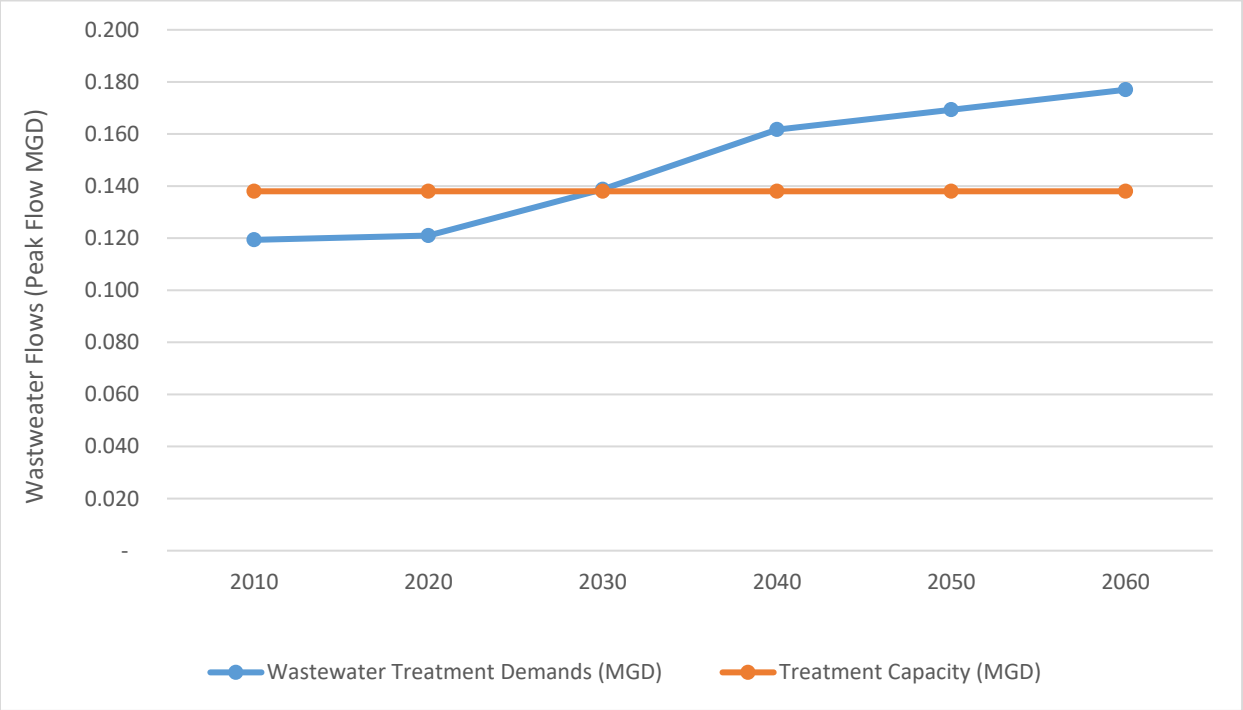

FIGURE 2-17. ZEBULON WASTEWATER FLOW FORECASTS

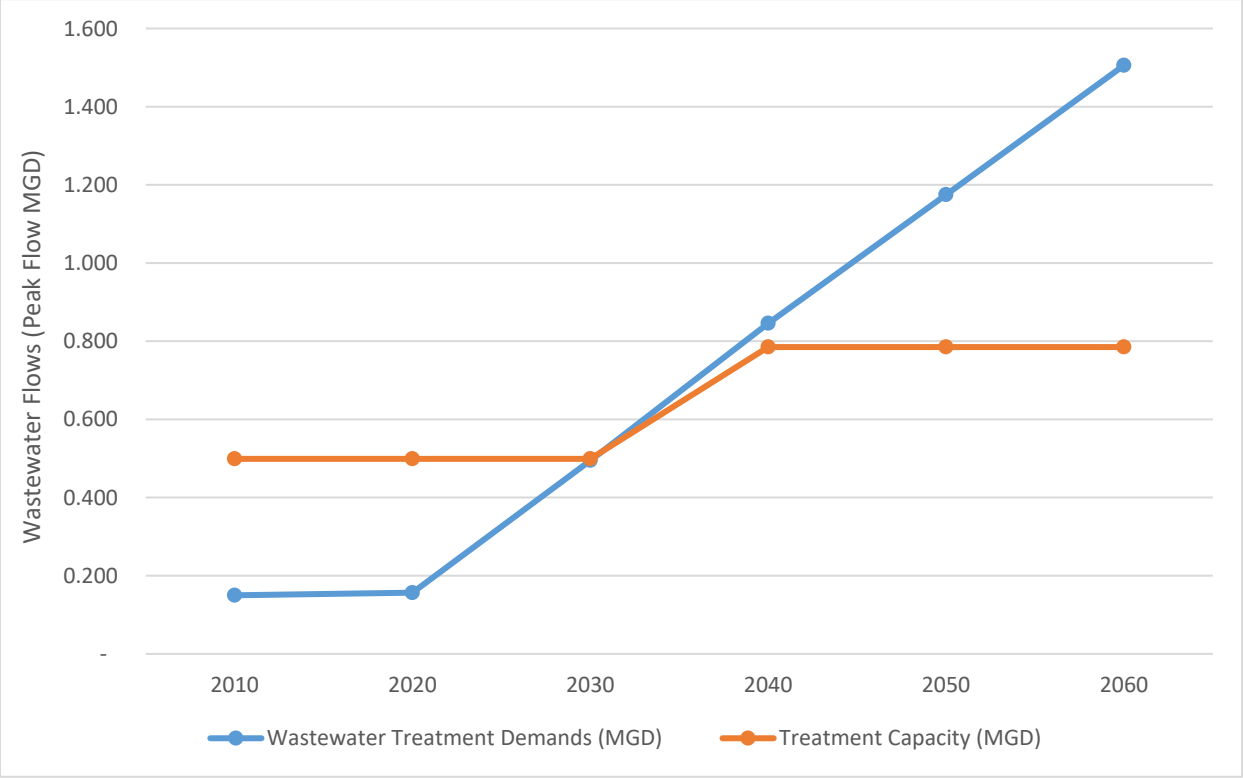

2.7 Septic System Forecasts

Most of Pike County residents are served by private septic systems. The performance of private septic systems depends on proper siting, installation, use, and maintenance. Every 5 to 10 years, depending on use, septic systems tanks are pumped. The septage must be properly pumped, transported, and disposed. Currently, pumped septage is accepted at the Concord South Pond facility as described in Section 2-4.

The flows treated by septic system are presented in Table 2-6 by community. The flows are presented so that the pumped septage can be accounted for either in wastewater treatment planning by Concord or Zebulon or as each community evaluates zoning requirements and the density of potential new septic systems.

Table 2-6. Septic System Forecasts by Community in MGD

Community	2020	2030	2040	2050	2060
Concord	0.054	0.062	0.072	0.075	0.079
Meansville	0.065	0.070	0.076	0.076	0.076
Molena	0.032	0.037	0.043	0.045	0.047
Williamson	0.089	0.103	0.120	0.126	0.131
Zebulon	0.070	0.080	0.094	0.098	0.102
Pike County	0.115	0.132	0.155	0.162	0.169

3 Alternatives Evaluation

A series of alternatives was developed and reviewed by the PWPC before selecting the plan recommendations. The water and wastewater alternatives are presented in progressive tiers that transition from more basic action items to more advanced action items. Generally, a system would address the action items in the more basic tier before progressing to the more advanced tier action items. There are three tiers of water alternatives with 29 total action items and two tiers of wastewater alternatives with 22 total action items. In addition, there are seven (7) overall recommended actions that are recommended for all systems that are not specific to water or wastewater and are not divided into tiers.

3.1 Water Supply and Distribution Alternatives

The water supply and distribution alternative action items are presented in three tiers, with the action items within each tier building on the action items in the previous tier. The three tiers described in the following section include focused improvements, development node, and regional water system.

3.1.1 Focused Improvements

The focused improvement action items, Table 3-1, generally address the overall functionality and efficiency of the existing water supply and distribution systems. These are seen as base recommended actions for each system with the implementation timeframe varying by system.

Table 3-1. Focused Improvements (I) Recommended Actions

#	Action Item	Description
IA. Non-Revenue Water (Basic)		
IA1	Install Production Meters at Each Source	Meter the volume of water entering the distribution system at all sources to better understand consumption and NRW. Reducing NRW can extend existing water supplies. Most systems have manually read meters

#	Action Item	Description
		with data stored in notebooks. Advanced Metering Infrastructure (AMI) allows for automated meter reading and is preferred to manually reading. If AMI is not installed, manual read results should be stored in spreadsheets.
IA2	Identify Non-Metered Connections	Install meters at every service connection to track water consumption, including City Hall, Fire Department, Public Library, etc. Identify and plan to install meters at all non-metered connections. This effort may be combined with IE1 as mapping known meters is an effective strategy to identify unmetered connections.
IB. Emergency Supply		
IB1	New Supply to Meet Current Water Demands	Molena's current water demands exceed the available supply. The current operable well fills the distribution tank that serves the daily needs. Either another well and/or an interconnection is needed to meet this critical need. Concord, Meansville, and Pike County WSA may need additional supplies by 2060 and should begin evaluating future supply sources.
IB2	Emergency Water Supply Plan	Each system should have an emergency water supply plan capable of providing approximately half of the daily demand for a period of 3 days. The Plan should consider a variety of emergencies such as well pump failure, power outage, tank failure, water main break, treatment system failure, etc. and how these emergencies may affect supply. The Plan may recommend an emergency interconnection to another system, secondary interconnection point, another well, or additional storage.
IB3	Emergency Repair Plan	Develop a plan to replace or repair major water system components that could result in water outages if it fails. The plan should include details on the component (make, model number, etc) as well as sources to secure a replacement part. The plan may include an inventory of some critical parts. The plan may also

#	Action Item	Description
		recommend an emergency generator. Communities should consider joining GAWARN, a network of water and wastewater providers poised to provide emergency support.
IC. Fire Flow Improvements (Basic)		
IC1	Map Fire Hydrants in GIS	Map the location of all fire hydrants in GIS along with the hydrant attributes (size, type, installation, outlet size, nozzle size, etc.). Maintenance needs or repairs are typically noted during mapping. The map will visually show areas where new hydrants are needed. The GIS template for hydrants is provided in Appendix B.
IC2	Implement a Valve Assessment and Mapping Program	Follow the standard methodology, defined by American Water Works Association (AWWA) in Manual of Practice M44, to effectively manage valves. In addition, each valve should be located and mapped in GIS to include location, depth, size, type, current position, and number of turns. The program should include a schedule to regularly exercise known valves. Maintenance records and rehab needs should be documented. The GIS template for valves is provided in Appendix B.
IC3	Fire Flow Review in Permitting	Review all construction plans for new non-residential construction, additions, remodeling, etc. for compliance with adopted fire prevention codes. This fire prevention program ensures that the water system and the developer are aware of issues prior to construction. If the infrastructure is not sufficient to meet fire flow needs, the system may partner with the developer to implement projects to meet the demands. A permit should not be issued for a project that cannot meet fire flow requirements.

#	Action Item	Description
ID. ISO Rating Improvements (Basic)		
ID1	Perform Annual Hydrant Inspections	National Fire Protection Association (NFPA) Manual of Practice 291 requires annual inspection of fire hydrants to ensure the hydrants are operational and in proper condition. An inspection report should be completed for each hydrant listing static pressure reading, date and time, along with any issues or repairs. Inspections should follow procedures in Manual of Practice AWWA M17.
ID2	Budget for Volunteer Firefighter Training	Increase budget allowance for fire fighter training to maximize ISO points. Recommend budgeting for the training class as well as to pay volunteer fire fighters for time attending training to increase participation. Maximizing training from the 2016 ISO audit could result in the desired one-point rating improvement. A training spreadsheet tool is included in Appendix C.
ID3	Fire Inspection of New Development/ Redevelopment	Inspect new development for compliance with adopted fire prevention codes prior to issuance of the certificate of occupancy (CO). Points are awarded for inspecting all new residential construction and all new non-residential construction prior to CO issuance.
IE. Water Infrastructure Management		
IE1	Map the Water System in GIS	Create a map of all water system attributes in GIS in coordination with IC1 and IC2. The GIS template for pipes, tanks, meters, and other assets is provided in Appendix B.
IE2	Implement Inspections & Maintenance Program	Create a plan for routine inspections of the water system assets and a procedure for tracking maintenance and capital improvement projects. Maintenance records should be maintained in a spreadsheet or a Computerized Maintenance Management System (CMMS).

#	Action Item	Description
IE3	Update Construction, Inspection, & Warranty Requirements	Review the construction standards and revise to ensure materials and methods support long-term system maintenance. Inspect developer and/or contractor completed projects prior to acceptance and prior to end of the warranty period. Consider whether current warranty or bond requirements are sufficient. Example construction & inspection requirements are in Appendix D.

3.1.2 Development Node

The development node action items build on the focused improvement actions and allow for the controlled expansion of the water supply and distribution systems.

Table 3-2. Development Node (II) Recommended Actions

#	Action Item	Description
IIA. Maximize Production		
IIA1	Well Rehabilitation Study	There are 10 inactive wells in Pike County that were previously operational. A well rehabilitation study will ideally include a camera inspection and review of the installation records to determine the rehabilitation needs and the cost to restore the well's original yield. Wells with a high yield to cost ratio can be placed back in service, with water available for local use, a neighboring community, or emergency use.
IIA2	Maximize Current Well Yield and Storage	Evaluate the operational wells to determine if rehabilitation or similar alterations could increase the well yield. Ensure existing system storage is sufficient to maximize well yield during normal operations. Site and construct additional storage in conjunction with the Water Distribution Model (IIB1).
IIB. Water Distribution Model & Enhancements		

#	Action Item	Description
IIB1	Develop a Water Distribution Model	Develop a calibrated model, using AWWA Manual of Practice M32, to support long-range planning and rehabilitation. The model should recommend projects to improve system efficiency, address water quality issues, improve fire flows, and meet planned development demands. The model will be based on the GIS maps developed in IE1.
IIB2	Implement Distribution System Upgrades	Create a Capital Improvement Plan (CIP) that prioritizes the installation of recommended projects from the Model (IIB1). Typically, the most cost-effective projects are implemented first.
IIB3	Develop a Distribution System O&M Plan	Create an Operations & Maintenance (O&M) Plan that identifies routine inspections and maintenance activities, as well as a program for rehabilitation of aging pipes and system components. This Plan should leverage EPD's *Guidance Manual for Preparing Public Water Supply System O&M Plans* (May 2000 or current).
IIC. Non-Revenue Water (Moderate)		
IIC1	Perform a Full Non-Revenue Water Audit	Perform an annual Non-Revenue Water Audit using the AWWA Free Water Audit Software to better understand and identify actions to reduce Non-Revenue Water. This assessment uses high quality and detailed data inputs to recommend cost-effective actions.
IIC2	Implement Recommendations from the NRW Audit	Use AWWA M36 methodology to identify and implement cost-effective actions identified in the Non-Revenue Water Audit. Prioritize actions based on available staffing and funding. These actions should be integrated into a CIP Plan (IIB2).
IID. ISO Rating Improvements (Moderate)		
IID1	Perform Fire Flow Testing of Hydrants Every 5 Years	Test each hydrant following AWWA M17 and NFPA 291 methodology, every 5 years. Results and date tested should be recorded. Additional ISO points are

#	Action Item	Description
		available for color-coded hydrant marking based on flows. Maintenance or rehabilitation needs should be tracked in spreadsheets or a CMMS system.
IID2	Implement Projects to Increase Fire Flow	Implement distribution system improvements to improve fire flows as recommended by the Water Distribution Model (IIB1).
IID3	Construct a Training Facility	Identify at least 2-acres of land and construct a fire service training center compliant with NFPA 1402. A live fire training structure including smoke room and a drill tower at least 3 stories tall will maximize points and facilitate completion of required training hours.
IID4	Budget for a Full-Time, Paid Fire Department	ISO points are awarded to communities with full-time fire fighters. This action item includes budgeting for full-time staff as well as a training budget sufficient to maximize training points for the full-time staff.

3.1.3 Regional Water System

The Regional Water System action items build upon the recommended actions in both the focused improvement and development node scenarios. This alternative allows for an aggressive growth of the water infrastructure to meet future demands.

Table 3-3. Regional Water System (III) Recommended Actions

#	Action Item	Description
IIIA. New Water Supply Study		
IIIA1	New Water Supply Study	Leverage previous studies in and around Pike County and explore options for a new surface water reservoir and/or new groundwater wells. The new sources should be consistent with the Upper Flint Regional Water Plan and sustainable.

#	Action Item	Description
IIIA2	Construct New Water Supply	Design, permit, and construct new water supply sources to meet future demands.
IIIB. Distribution System Expansion		
IIIB1	Plan Distribution System Expansions	Leverage the water system model (IIB1), to plan the extension of the distribution system to meet demands in a sustainable fashion, mindful of water quality and fire flow considerations.
IIIC. Evaluate Water Production Wholesale Model		
IIIC1	Evaluate Water Production Wholesale Model	Evaluate the creation of a new wholesale water production entity who distributes potable water to existing distribution systems. Communities currently purchasing water from Griffin, would transition to the local wholesale provider as contracts permitted. Typically, wholesale models create a water authority board that includes representatives from each of the communities purchasing water. The study should carefully weigh the long-term cost-benefits as well as the upgrades that may be needed to each distribution system, including storage, to provide a sustainable system.

3.2 Wastewater Collection and Treatment Alternatives

The wastewater collection and treatment action items are presented in two tiers, with the recommendations within each tier building on the recommendations in the previous tier.

3.2.1 Focused Wastewater Improvements

The focused wastewater system action items focus on operating the existing collection system and treatment facilities at peak efficiency, thereby optimizing the existing

treatment capacity. These recommendations only apply to the City of Concord and the City of Zebulon who operate public wastewater systems. These are seen as base recommendations for both systems and recognize that implementation timeframes may vary.

Table 3-4. Focused Wastewater Improvements (WWI) Recommended Actions

#	Action Item	Description
WWIA. Wastewater Treatment		
WWIA1	Concord North Pond Rehabilitation	Implement planned Concord North Pond rehabilitation actions to address the short treatment time and water quality challenges. Actions include installation of baffles and aeration (power, pump, and motor). This project is ongoing and partly funded with ARPA funds.
WWIA2	Concord South Pond Rehabilitation	Dredge the Concord South Pond to maximize treatment volumes and eradicate algae.
WW1A3	Emergency Repair Plan	Create a plan for replacing major system components. Include the age, condition, replacement cost, anticipated replacement timeframe as well as the make/ model/ supplier of major system elements. This plan could also recommend budgeting for emergency generators to ensure critical pump stations remain operational during power outages. Communities should consider joining GAWARN, a network of water and wastewater providers poised to provide emergency support.
WW1A4	Flow Monitoring of Plant Influent & Effluent	Flow monitoring of the influent and the effluent provides critical data for system planning and operations. Automated monitoring of plant influent is strongly

#	Action Item	Description
		recommended for to assist in I&I assessment. Until installed, manually read data should be stored in a spreadsheet and not just a notebook.
WW1A5	Septage Records	Maintain records of the volume of septage received, the time of day received, and any impact on water quality in a spreadsheet. Data can guide future policies or improvements to septage treatment.
WWIB. Collection System Operations & Maintenance		
WWIB1	Collection System Map in GIS	Create a map of all wastewater system assets, including attributes, in GIS. The GIS template for pipes, pump stations, manholes, and other assets is provided in Appendix B.
WWIB2	Implement Inspections & Maintenance Program	Create a plan for routine inspections of the wastewater system and a procedure for tracking maintenance and capital improvement projects. Maintenance records should be maintained in a spreadsheet or a Computerized Maintenance Management System (CMMS).
WW1B3	Collection System Rehabilitation Program	Create a CIP for the ongoing rehabilitation of aging wastewater collection pipes, lower laterals (if publicly maintained), and manholes. The CIP should prioritize projects based on criticality so that the most important pipes in the system are rehabilitated first.
WW1B4	Outreach & Education	Educate the public and businesses on proper use of the wastewater system and septic systems. Fats, Oils, and Grease

#	Action Item	Description
		(FOG) and 'flushable' wipes educational materials can be added to existing communication vehicles.
WWIC. Targeted I&I Reduction Program		
WWIC1	Identify Priority I&I Sewersheds	Use available data from lift station run times, flow meters or level sensors, repeat wet weather SSO locations, or anecdotal information to prioritize sewersheds for investigation. A sewershed refers to the collection system that drains to a certain downstream point. A sewershed can range in size based on the downstream point.
WWIC2	Assess Priority Sewersheds	Assess priority watersheds, one at a time, to determine the source(s). Assessment techniques may include temporary flow meters and/or level sensors, targeted smoke testing if inflow is suspected, or small-scale CCTV if excessive infiltration is expected. Consider a regional resource or contract for I&I field work. Document all defects in spreadsheets or a CMMS. Some I&I sources may be private sources, such as cooling towers, swimming pools, or condensate lines. Coordination with the property owner to address private side issues should be documented in spreadsheets or a CMMS.
WW1C3	Priority Sewer Rehabilitation	Prioritize and address the sources of I&I identified during the priority sewershed assessment (WWIC2) on the public collection system. Notify private property owners if I&I issues are suspected from private side sources and follow local notification and enforcement policy.

#	Action Item	Description
WWID. Construction & Maintenance Strategy		
WW1D1	Update Construction & Inspection Requirements	Review the construction standards and revise to ensure materials and methods support long-term system maintenance. Inspect developer and/or contractor completed projects prior to acceptance and prior to the end of the warranty period. Inspect new buildings for potential cross connections to the sewer system. Consider whether current warranty or bond requirements are sufficient. Example construction & inspection requirements are in Appendix D.

3.2.2 Wastewater System Expansion

The wastewater system expansion action items are geared toward expanding and extending the current wastewater collection and treatment facilities in Concord and Zebulon.

Table 3-5. Wastewater System Expansion (WWII) Recommended Actions

#	Action Item	Action Item Description
WWIIA. Wastewater Treatment Expansion		
WWIIA1	Evaluate Zebulon Treatment Expansion	Zebulon flows are projected to exceed the LAS capacity around 2030 necessitating the use of their discharge permit. Flows are expected to exceed permitted discharge levels in 2040 based on commercial growth. Planning for the 2030 discharge is needed as well as careful monitoring of flows.

#	Action Item	Action Item Description
WWIIA2	Evaluate Concord Treatment Flows	Concord flows are projected to exceed the total capacity for both ponds in 2030. Actions WWIA1 and WWIA2 include improvements to the efficiency of the ponds. Influent and effluent flows should be carefully tracked in a spreadsheet to determine if the facilities are at capacity. When flows reach 75% of capacity, Concord should begin planning for these future wastewater needs.
WWIIA3	Evaluate Pumped Septage Demands	Concord currently accepts limited residential pumped septage. Data collected in WWIA5 as well as data on new septic systems installed should be considered when designing any facility upgrade or expansion. Design considerations might include additional screening or better septic intake facilities.
WWIIB. Wastewater Collection System Model		
WWIIB1	Develop a Static Model Structure	A static model's structure is the physical representation of the collection system and relies on the GIS mapping in WWIB1. The static model structure is the starting point for developing a calibrated model.
WWIIB2	Develop Flow Estimates by Land Use	The static model structure (WWIIB1) is improved with accurate flow estimates by land use. Temporary flow meters that isolate a specific land use are often used to develop community-specific values, or assumptions may be made using available industry data.
WWIIB3	Develop Assumptions for Wet Weather Contributions	Flow monitoring and rainfall data provide data for estimating community-specific wet weather assumptions that are added to

#	Action Item	Action Item Description
		the static model structure (WWIIB1), or assumptions may be made for peaking factors. The assumptions may vary by sewershed or may be consistent across the system.
WWIIB4	Calibrate the Model Using Temporary Flow Meters	The static model structure (WWIIB1) with assumptions (WWIIB2 & WWIIB3) are calibrated against actual flow and rainfall data to ensure the model predictions reflect the system. The model is then used to prioritize capital improvements and forecast the systems response to potential system extension projects.
WWIIC. Collection System Expansion and Rehabilitation		
WWIIC1	Extend the Wastewater Collection System	Use the calibrated system model (WWIIB4) to identify sustainable system expansion projects. Planned developer extensions should be modeled to determine whether system upgrades are needed in conjunction with the extension.
WWIIC2	Implement Priority Wastewater Rehabilitation Projects	Implement the CIP projects identified through modeling efforts (WWIIB4) as well as priority sewershed rehabilitation projects (WWIB3 and WWIC3). Budget for rehabilitation and prioritize CIP projects based on benefit, risk, and budget constraints.

3.3 Overall Recommendation Actions

The overall recommended actions apply to each system within Pike County. These recommendations focus on sustainable growth with development being planned around existing infrastructure as well as ensuring that rates create sufficient revenues so that the system is sustainable.

Table 3-6. Overall (O) Recommended Actions

#	Action Item	Description
OIA. Plan Growth around Water & Wastewater Infrastructure		
OIA1	Share and Build GIS Data	Share the water and wastewater system GIS maps with the Three Rivers Regional Commission as part of the ongoing Comprehensive Plan Update. The development should focus on areas with existing infrastructure. Most water and wastewater action items result in better system data and thus map updates.
OIA2	Update Zoning Maps	Each local jurisdiction should update zoning maps to reflect the development pattern identified in the Comprehensive Plan, so that zoning aligns with existing water infrastructure.
OIA3	Adopt Policies for Sustainable Growth	Each community should assess the adequacy of the existing policies and procedures to support the overall health of the system. Example policies are provided in Appendix E that can be tailored to each community following the review by local legal counsel.
OIA4	Septic System Planning & Permitting	Septic system installation is managed by the Pike County Department of Environmental Health. Each jurisdiction can require that all new lots served by septic system identify and protect an area on the lot that could serve as a secondary drainfield in the event of failure. Each jurisdiction could also require larger minimum lot sizes for septic systems (i.e., 1-acre). These policies will ensure that suitable land area is available on each lot for the eventual septic drainfield replacement. As part of this effort, each

#	Action Item	Description
		community should improve the Environmental Health map of known septic systems in GIS in accordance with the data dictionary in Appendix B.
OIB. Rate Structures and Value of Water		
OIB1	Evaluate Existing Rate Structure	Rate structures should be evaluated at least once every 5 years to ensure that rates are sufficient to cover capital and operating expenses, including depreciation. Rates should allow the system to build a reserve fund that is at a minimum one month to 45 days of operating expenses. Tiered water rates and base rate levels are important considerations, as is ensuring affordability. The Georgia Water & Wastewater Rates Dashboard is a good resource for evaluating and comparing rates.
OIB2	Adopt Revised Rates	This Plan recommends implementing rate structures that automatically adjust annually to reflect inflation or similar economic indicator. The Consumer Price Index (CPI) and the Waste & Trash Service Index within the CPI are two such indicators. The automatic adjustments create a more financially stable system.
OIB3	Value of Water Education	Coordinate with the Extension Service, Three Rivers Regional Commission, ACCG/GMA, and the Upper Flint Regional Water Planning District to educate the community on the value of water. This education may include water conservation, proper grease management, or cross connection control programs. Local water systems should use water

#	Action Item	Description
		bills and other public messaging options to communicate the benefits of important system improvements.

4 Recommended Actions

The action items presented in Section 3 are assigned to an implementation timeframe that prioritizes the most critical actions. This section presents information to support implementation of the priority action items.

4.1 Implementation Timeframe

Each action item outlined in Section 3 was assigned an implementation timeframe based on the criticality of the recommendation. The implementation timeframes (Figure 4.1) range from priority to long range based on the urgency of the action item. The priority action items are those that should be completed first with implementation within approximately two (2) year from Plan adoption. The important action items are generally those that could be implemented within one decade following Plan adoption. The mid-range and long-range action items will likely occur following the next update to this Plan. Each system is unique and has individual needs, thus the timeframes, as presented, are not intended to be followed rigorously.

FIGURE 4.1. IMPLEMENTATION TIMEFRAME CATEGORIES

The implementation timeline is presented in Tables 4.1 through 4.6, shown in the same tiers as presented in Section 3. The tables include planning level costs that are intended to assist with planning and budgeting. The planning level costs are based on the EPD "*Supplemental Guidance for Planning Contractors: Water Management Practice Cost Comparison*" guidance document. An inflation and contingency of 25% was added to the base costs to reflect price escalation since 2011. Since the planning level costs are for budgeting purposes, several of the recommended action items present a relatively nominal cost for program setup and legal review with a user fee that would generate the ongoing implementation costs of that program.

Table 4-1. Focused Water Alternatives Implementation

Focused Water Alternatives	Implementation Timeframe				Planning Level Costs (per system)
	Priority	Important	Mid-Range	Long-Range	
IA. Non-Revenue Water (Basic)					
IA1. Install Production Meters at Each Source	■				$10,000/ meter
IA2. Identify Non-Metered Service Connections	■				$5,000/ meter
IB. Water & Emergency Supply					
IB1. New Water Supply to Meet Current Demands	■				$50,000 - $5,000,000+
IB2. Emergency Water Supply Plan		■			$20,000
IB3. Emergency Repair Plan		■			$30,000
IC. Fire Flow Improvements (Basic)					
IC1. Map Fire Hydrants in GIS	■				$50 - $100/ hydrant
IC2. Implement a Valve Assessment and Mapping Program	■				$50 - $100/ valve
IC3. Fire Flow Review in Permitting		■			$5,000 + user fee
ID. ISO Rating Improvements (Basic)					
ID1. Perform Annual Hydrant Inspections		■			$50 - $100/ hydrant
ID2. Budget for Volunteer Firefighter Training		■			$2,000+ / firefighter
ID3. Fire Inspection of New Development/ Redevelopment		■			$5,000 + user fee
IE. Water Infrastructure Management					
IE1. Map the Water System in GIS		■			$10,000 - $50,000+
IE2. Implement Inspections & Maintenance Program		■			varies
IE3. Update Construction & Inspection Requirements	■				$5,000 + user fee

Table 4-2. Water Development Node Alternatives Implementation

Water Development Node Alternatives	Implementation Timeframe				Planning Level Costs (per system)
	Priority	Important	Mid-Range	Long-Range	
IIA. Maximize Production					
IIA1. Well Rehabilitation Study			■		$5,000 - $20,000/ well
IIA2. Maximize Current Well Yield and Storage			■		$5,000 - $20,000/ well
IIB. Water Distribution System Model & Enhancements					
IIB1. Develop a Water Distribution Model			■		$20,000 - $50,000+
IIB2. Implement Distribution System Upgrades			■	■	Varies
IIB3. Develop a Distribution System O&M Plan			■		$10,000 - $20,000+
IIC. Non-Revenue Water (Moderate)					
IIC1. Perform a Full Non-Revenue Water Audit			■		$10,000 - $20,000+
IIC2. Implement Recommendations from the NRW Audit			■	■	Varies
IID. ISO Rating Improvements (Moderate)					
IID1. Perform Fire Flow Testing of Hydrants Every 5 Years			■		$50 - $100/ hydrant
IID2. Implement Projects to Increase Fire Flow		■	■	■	Varies
IID3. Construct a Training Facility			■		$2,000,000 - $5,000,000+
IID4. Budget for a Full-Time, Paid Fire Department			■		Varies

Table 4-3. Regional Water System Alternatives Implementation

Regional Water System Alternatives	Implementation Timeframe				Planning Level Costs (per system)
	Priority	Important	Mid-Range	Long-Range	
IIIA. New Water Supply					
IIIA1. Water Supply Study					$250,000+
IIIA2. Construct New Water Supply					Varies
IIIB. Distribution System Expansions					
IIIB1. Plan Distribution System Expansions					Varies
IIIC. Evaluate Water Production Wholesale Model					
IIIC1. Evaluate Water Production Wholesale Model					$60,000+

Table 4-4. Focused Wastewater System Alternatives Implementation

Focused Wastewater System Alternatives	Implementation Timeframe				Planning Level Costs (per system)
	Priority	Important	Mid-Range	Long-Range	
WWIA. Wastewater Treatment Projects					
WWIA1. Concord North Pond Rehabilitation	■				$750,000+
WWIA2. Concord South Pond Rehabilitation	■				$750,000+
WWIA3. Emergency Repair Plan		■			$50,000+
WWIA4. Automated Flow Monitoring of Plant Influent & Effluent	■				$25,000 / meter
WWIA5. Septage Records		■			$1,000 + user fee
WWIB. Collection System Operations & Maintenance					
WWIB1. Collection System Map in GIS		■			$10,000 - $50,000+
WWIB2. Implement Inspections & Maintenance Program		■			Varies
WWIB3. Collection System Rehabilitation Program	■	■	■	■	Varies
WWIB4. Outreach and Education	■	■	■	■	$1,000/ year
WWIC. Targeted I&I Reduction Program					
WWIC1. Identify Priority I&I Sewersheds	■				$5,000 - $25,000
WWIC2. Assess Priority Sewersheds	■				$15,000 - $150,000+
WWIC3. Priority Sewer Rehabilitation	■	■	■	■	Varies
WWID. Construction & Maintenance Strategy					
WWID1. Update Construction & Inspection Requirements	■				$5,000 + user fee

Table 4-5. Wastewater System Expansion Alternatives Implementation

Wastewater System Expansion Alternatives	Implementation Timeframe				Planning Level Costs (per system)
	Priority	Important	Mid-Range	Long-Range	
WWIIA. Wastewater Treatment Expansion					
WWIIA1. Evaluate Zebulon Treatment Expansion					$50,000 - $150,000+
WWIIA2. Evaluate Concord Treatment Flows					$25,000 - $100,000+
WWIIA3. Evaluate Pumped Septage					$15,000
WWIIB. Wastewater Collection System Model					
WWIIB1. Develop a Static Model Structure					$25,000 - $75,000+
WWIIB2. Develop Flow Estimates by Land Use					$10,000
WWIIB3. Develop Assumptions for Wet Weather Contributions					$10.000
WWIIB4. Calibrate the Model Using Temporary Flow Meters					$50,000 - $250,000+
WWIIC. Collection System Expansion and Rehabilitation					
WWIIC1. Extend the Wastewater Collection System					Varies
WWIIC2. Implement Priority Wastewater Rehabilitation Projects					Varies

Table 4-6. Overall Recommendations Implementation

Overall Recommendations	Implementation Timeframe				Planning Level Costs (per system)
	Priority	Important	Mid-Range	Long-Range	
OIA. Plan Growth around Water & Wastewater System					
OIA1. Share and Build GIS Data					$1,000/ year +
OIA2. Update Zoning Maps					$5,000 - $15,000
OIA3. Adopt Policies for Sustainable Growth					$3,000 - $10,000
OIA4. Septic System Planning, Mapping & Permitting					$3,000 planning; $100/system mapping; user fee for permitting
OIB. Value of Water and Water Rates					
OIB1. Evaluate Existing Rate Structure					$10,000
OIB2. Adopt Revised Rates					$1,000
OIB3. Value of Water Education					$1,000/ year

4.2 Funding Sources

This section highlights funding sources that are commonly used to fund water and wastewater projects, such as those recommended in this Plan.

4.2.1 Georgia Environmental Finance Authority (GEFA) Programs

GEFA offers three primary low-interest financing programs to local governments for drinking water, water supply, water quality, and stormwater projects. Two of the loans leverage federal dollars, therefore federal requirements apply including environmental review, contractor wage rates, disadvantaged business enterprise inclusion, and American iron and steel material requirements.

GEFA holds a pre-application period each year from fall to early spring, termed “call for projects”. GEFA scores each pre-application assigning both a project score and an affordability score. The project score is typically higher for priority project types, described under each loan program below. The affordability score along with the project score determine whether a community is eligible for principal forgiveness, and the percentage of loan principal forgiveness. The scoring is explained in the annual “call for projects” on GEFA’s website.

Most of the recommendations in this Plan could be financed through one or more of the GEFA loans. Any system that plans to finance a project through GEFA should sign up for the “water resources outreach list” on the GEFA website to receive important communications. Additionally, there are points awarded within the project score for “project readiness” which rates the applicant’s progress toward meeting federal loan requirements such as engineering procurement and state environmental review process. Project readiness activities ideally occur prior to the submission of the pre-application is submitted to maximize points.

4.2.1.1 Drinking Water State Revolving Fund

The Drinking Water State Revolving Fund (DWSRF) finances a wide range of drinking water projects using federal funds. The annual borrowing cap is $25M and the loan term is 30 years, which can be extended to 40 years if GEFA determines that a community is financially distressed. Priority DWSRF projects include those that address public health and compliance-related projects, redundancy projects, and water conservation projects. Projects that may be considered priority projects recommended in this Plan include:

- New Supply to Meet Current Demands (IB1) as a public health-related water supply project
- Emergency Water Supply Plan (IB2) as redundancy
- Well Rehabilitation Study (IIA1) and Maximize Well Yield (IIA2) as projects that address capacity and pressure system deficiencies

Water conservation related projects are eligible for the "conservation interest rate," which is a 1-percent reduction from the standard interest rate. Projects eligible for the conservation rate that are associated with Plan recommendations include:

- Pipe replacement or rehabilitation to reduce water loss and prevent water main breaks (IIC2)
- Upgrades at a water treatment plant that result in greater energy efficiency
- Installing water meters in previously unmetered areas (IA1 and IA2)
- Replacing broken/malfunctioning water meters or upgrading existing water meters with automatic meter reading (AMR) and advanced metering infrastructure (AMI) systems (IIC2)

Projects that are ineligible for funding include projects that are solely for economic development (e.g., extending water to a new business), reservoirs, and projects that are primarily for fire flow improvements.

4.2.1.2 Clean Water State Revolving Fund

The Clean Water State Revolving Fund (CWSRF) finances wastewater projects using federal funds. The annual borrowing cap is $25M and the loan term is 30 years. Priority CWSRF projects include those that address water quality, repairing and replacing sewer lines, and conservation projects. Projects within this Plan that could be funded with CWSRF include:

- Concord North Pond Rehabilitation (**WWIA1**) and Concord South Pond Rehabilitation (**WWIA2**)
- Identify and Assess Priority Sewersheds (**WWIC1, WWIC2**) and Priority Sewer Rehabilitation (WWIC3)
- Evaluate Pumped Septage (WWIIA3)
- Implement Priority Wastewater Rehabilitation Projects (WWIIC2)

CWSRF projects that are eligible for the “conservation interest rate” and are also priority projects. The conservation projects associated with the Plan recommendations include:

- Pipe rehabilitation to address inflow and infiltration
- Upgrades at a wastewater treatment plant that result in greater energy efficiency
- Sewer extension to areas served by faulty septic tanks

Projects that are ineligible for funding include projects that are solely for economic development (e.g. extending sewer to a new business).

4.2.1.3 Georgia Fund

The Georgia Fund, unlike DWSRF and CWSRF, is a state-funded program to serve additional needs beyond what the SRF programs can finance. The Georgia Fund is available for economic development-focused water and sewer projects, dams, and emergency projects that address actual or potential public health hazards. Emergency loans are capped at $0.5M dollars, while other Georgia Fund loans have a maximum of $3M dollars. The loan term is 20 years. Emergency loans require a project tied to an urgent need that has arisen within the last 6 months and that is not the result of lack of maintenance.

Most of the Plan’s recommendations are eligible for the Georgia Fund. One project, New Supply to Meet Current Demand (**IIB1**) would qualify for an emergency loan to perform the well study to identify a new source of supply while applying for other funding to support the infrastructure needed to connect the new supply source to the Molena water system.

4.2.2 American Rescue Plan Act (ARPA)

The Coronavirus State and Local Fiscal Recovery Funds, established by the American Rescue Plan Act (ARPA) of 2021 are available to address acute pandemic response needs, fill revenue shortfalls, and support communities hardest hit by the crisis. ARPA funds are specifically available for water and sewer investments to improve access to clean drinking water and support vital wastewater infrastructure.

Additional information on the funding and eligible projects is available in “Fact Sheet” located on the Governor’s Office of Planning and Budget website.

One recommended Plan action item, Concord North Pond Rehabilitation (**WWIA1**), has received ARPA funding. Several communities applied for ARPA funds for projects recommended in this Plan but were not selected. It is uncertain whether additional rounds of funding will be offered and if future rounds would include the same priorities.

4.2.3 EPD Regional Water Plan Seed Grants

EPD awards grants annually to communities to support and incentivize implementation of projects recommended within their Regional Water Plan. The grant awards are limited to $75,000 and the projects must be completed within thirty (30) months. Applicants must attend a pre-application meeting with EPD prior to the deadline with applications typically due in the fall. This Plan is funded, in part, through an EPD Seed Grant.

The grants require a 40% local match, of which 10% of the total project cost must be a cash match and the remaining can be in the form of in-kind services or resources. The application mut include a letter of endorsement signed by the Regional Water Planning Council Chair and describe how the project is consistent with the goals articulated in the Regional Water Plan. A Regional Water Plan Seed Grant guideline document is available on the EPD website that describes the key ranking criteria, project priorities, and outlines the application process.

4.2.4 Special Purpose Local Option Sales Tax (SPLOST)

A Special Purpose Local Option Sales Tax (SPLOST) is an optional one-percent sales tax on items subject to state sales tax to fund local capital projects identified by the county and participating cities. Pike County voters approved a SPLOST on May 24, 2022. The SPLOST will start on October 1, 2022 and will not exceed six years with the intent of raising $20M for water and sewer among other infrastructure projects within Pike County and the cities of Concord, Meansville, Molena, Williamson, and Zebulon.

4.2.5 Georgia 319(h) Grants

The 319(h) grant are federal funds issued by the state to prevent or abate nonpoint source pollution. Grants are awarded following a competitive process to eligible projects that address nonpoint sources of pollution and result in measurable improvements to water quality. The grants require a cost-share ration of 40% local match with 60%

federal dollars with a maximum award of $400,000. Applications are accepted annually through the Grant Application Portal (GAP). Completing the map of known septic systems (OID) would be an eligible 319(h) project.

4.3 Priority Implementation Action Items

A description of each of the priority implementation actions is included in greater detail, as these are the first actions recommended for implementation.

4.3.1 Share and Build GIS Data (**OIA1**)

The GIS data compiled and used to create this Water and Wastewater Master Plan have been shared with the Three Rivers Regional Commission. The Three Rivers Regional Commission is currently working with Pike County and the cities on updating their Comprehensive Land Use Plans. As these Plans will guide future growth and development, it is important that they facilitate growth in areas that are currently served by water and/or sewer.

A limited amount of GIS data was available and several of the action items recommend collecting additional GIS data to support future decision making and sound asset management. General guidance for building GIS data is listed below.

- Integrate data mapping in GIS or compatible mapping system into every project budget (including grant and loan funded projects).
- Collect as-built data in CAD from developers and contractors.
- Maintain data in a spreadsheet following the format in Appendix B if data collection in a GIS-compatible mapping system is not possible.
- Coordinate GIS data updates with the Three Rivers Regional Commission

Appendix B includes data dictionary spreadsheets for each asset type that outline the attributes that should be collected for each asset type. Using a consistent methodology across jurisdictions will improve the ability to collaborate in the future.

4.3.2 Adopt Policies for Sustainable Growth (**OIA3**)

The regulations, policies, and procedures adopted for each system should allow for planned systematic growth and support cost recovery in coordination with the adopted rates (**OIB2**). A list of sustainable policies is listed below, and examples are provided in Appendix E.

- Adopt a schedule of rates, fees, and penalties.
- Adopt a water line extension policy.
- Create water and wastewater standard specifications and details.
- Adopt a water shortage plan.
- Create a fire flow test application with associated fees.
- Implement a pre-treatment program for wastewater systems.
- Adopt a cross-connection ordinance and associated policies.

Any local ordinance or policy should be adopted following local requirements and in consultation with legal counsel.

4.3.3 Evaluate Existing Rate Structure (**OIB1**)

Water and sewer rates provide the basis for a sustainable utility. The rates must balance two divergent goals: covering the costs of operation (including depreciation) while remaining affordable for the community. Section 1-6 presents the existing rates and while all systems have rates that are considered affordable, several systems have rates that are insufficient to cover costs. General rate setting guidance is listed below.

- Rates should cover the full cost of system operation including system rehabilitation and depreciation.
- Each system should build an emergency fund of 30 to 45 days of operating expenses.
- Tiered rates for consumption on a sufficient base rate are preferred, so long as the base rate is sufficient to cover operating expenses, as these rates incentivize conservation which delays the need for new supply.

- Evaluate fees for service and local policies (OIB1) to cover the cost of service when assessing rates. For example, meter fees, plan review fees, fire installation inspection, disconnect/reconnect fees, etc.
- Rates should be evaluated at least once every 5 years or prior to a large capital investment.

There are several guidance documents available on rate setting and rate structure options including those in Appendix F, or a rate consultant may be hired. The Georgia Water & Wastewater Rates Dashboard is a good resource to evaluate rates, but each system has different costs of operation and therefore will have different rates. In addition to creating a sustainable utility, most grant and loan programs require documentation that the system rates are sufficient prior to awarding funds.

4.3.4 Adopt Revised Rates (**OIB2**)

Once the rate structure is determined (**OIB1**), the rate must be adopted following procedures outlined in local ordinances regarding notifications and elected body vote. This Plan recommends adopting a cost of living or equivalent annual increase tied to a standard index, such as the Consumer Price Index (CPI). The CPI is compiled by the US Bureau of Labor Statistics and is a measure of the average change over time paid by urban consumers in the US. There is the overall CPI, but also a national price index for water and sewer and trash collection, based on the average for urban consumers in the US. These small annually increases should be built into the rate structure so that they do not require an annual approval or vote.

According to a recent GEFA Report, most Georgia utilities actively evaluate their rate structures every one to two years (*2022 Georgia Water & Wastewater Report*). Between 2021 and 2022, 12% of the water utilities and 14% of wastewater utilities participating in the GEFA survey increased their rates. A copy of the report is included in Appendix F.

4.3.5 Install Production Meters at Each Source (**IA1**)

Production meters provide valuable data on the water pumped from each water supply source into the distribution system. The data can show trends regarding well efficiency and allow tracking of non-revenue water. Most water systems have a meter that is manually read.

At a minimum, water production data should be saved in a spreadsheet to allow for quick calculation of averages, minimum, and maximum flows. The production data can be compared to water sold based on meter readings, to get a rough estimate of non-revenue water. Advanced Metering Infrastructure (AMI) allows for automated meter reading and is preferred to manually reading.

4.3.6 Identify Non-Metered Service Connections (**IA2**)

All connections in a water distribution system should be metered, even those that are not billed for water consumption. This Plan recommends scheduling and budgeting to install meters on all known non-metered facilities, such as City Hall, Fire Stations, Public Library, and Public Parks. Once those locations are metered, a review of the parcels along each public distribution line can help locate whether parcels may be connected to public water but do not have a water meter. While assessing the status of the meters, data on existing meters should be collected in GIS (or GIS compatible format) following the data dictionary in Appendix B.

Parcels identified during the investigation that are not metered, should be metered. Public facilities are typically metered by the water department when budgets and staffing are available. Private property owners will pay for meters, following the existing procedures for meter purchase for new developments.

4.3.7 Identify a New Supply Source to Meet Current Demands (**IB1**)

The City of Molena currently has one active water supply well and one above ground tank. That well has high uranium levels and therefore must be treated, which raises the cost of treated water and effectively reduces well yield.

Recently, a distribution system issue resulted in a serious system water outage. Molena urgently needs a new potable water supply source to meet current demands, future demands, and offer protection during an emergency. The viable future water supply alternatives include locating a new potable water supply well or an interconnection with an adjacent system. The cost of installing approximately 5 miles of 8” water main to connect to one of the adjacent water systems is estimated to be $5.5M. The cost of locating, testing, and installing a new well with treatment and pumping is estimated at $0.5M and the allowance for 1 mile of 8” water main to connect to the Molena system is estimated at $1.1M for a total project cost of $1.6M.

This Plan recommends that Molena engage a hydrogeologist to identify at least one additional groundwater well near the system limits. Preferably, the new well would not have high uranium, iron, or manganese levels so that additional level of expensive treatment is not needed. Depending on the location of that well and other system considerations, a second water tank may be needed. This project could be eligible for a Drinking Water State Revolving Fund Loan (DWSRF), Community Development Block Grant (CDBG), or American Plan Recovery Act (ARPA). Molena may evaluate using the Georgia Fund to install the well(s) identified by the siting study concurrent to applications for other funding sources for construction of the transmission main.

While not as urgent, Concord will need additional water supply by 2040. Concord has an interconnection with Griffin that by contract can provide 100,000 gallons/day of water and more if proper notification is provided. Concord should start planning now for their needs in 2040.

Meansville and Pike County WSA demands approach available supplies by 2060. These systems should continue to watch water demands and water supply capacity and plan ahead for future demands.

Molena and Concord may benefit from economies of scale if they jointly hire a hydrogeologist to investigate well locations in both communities.

4.3.8 Map Fire Hydrants in GIS (**IC1**)

The ISO certification process assigns points related to hydrants in several categories, therefore a GIS map of hydrants with the details of each hydrant will facilitate these calculations. Most water systems in Pike County have a map of fire hydrants that includes some information about the hydrant. Mapping hydrants provides an easy visual tool for determining where additional hydrants are needed.

For hydrants that are already mapped, the mapping effort includes documenting the attribute data (size, type, installation, outlet size, nozzle size, etc.) using the data dictionary in Appendix B. For previously unmapped hydrants, the location and attribute information are collected.

If maintenance needs are noted during the identification process, these repairs should be included on the CIP list or in the CMMS system. If possibly, communities may elect to perform annual hydrant inspections (ID1) while completing the map.

4.3.9 Implement a Valve Assessment and Mapping Program (**IC2**)

Valves are a critical component of the water distribution system and allow for certain portions of the system to be isolated in the event of a water main break and/or control flow or pressure in portions of the system. Valves are mechanical parts that must be exercised (opened and closed) to ensure they are functional during an emergency. It is also important to periodically check that a valve is in the correct position (allowing the proper amount of flow) and determine if any rehabilitation is needed.

The process for exercising valves should follow *AWWA M-44 Distribution Valves: Selection, Installation, Field Testing, and Maintenance*. Typically, the inspection will include the following elements:

- Ensure that the valve box is accessible, it is not full of mud or debris or buried.
- Inspect the valve for leaks around the valve stem.
- Ensure the valve handle is intact.
- Ensure that the valve can be fully opened and fully closed.
- Record important valve attributes including whether it is right-handed or left-handed and whether it is normally opened or closed.
- Record any necessary rehabilitation or maintenance.

The attribute collection during inspection should follow the GIS data dictionary in Appendix B.

4.3.10 Update Construction and Inspection Requirements (**IE3**)

Water distribution systems are often extended when new developments connect and dedicate privately constructed infrastructure to the local water system. Similarly, contractors are hired to repair and/or extend waterlines in the public system. A construction and inspection program ensures that the system extension and/or rehabilitation projects meet certain minimum quality standards.

Project designs should be reviewed prior to construction to ensure that materials and workmanship standards meet the minimum requirements for the system. The project should be inspected during installation/rehabilitation to ensure the materials and

installation methods are proper. Finally, there should be a certification step where the installation is tested and/or certified prior to acceptance into the public system.

Example water system construction specifications are included in Appendix D.

4.3.11 Concord North Pond Rehabilitation (**WWIA1**)

The Concord North Pond was recently rehabilitated to stabilize the exterior earthen dam that was experiencing erosion. This project, partly funded by a GEFA loan, included a seepage recovery system and electrical service. Currently, the pond is experiencing some water quality challenges as the result of a shortened treatment time within the pond. Concord received American Rescue Plan Act (ARPA) funds to construct improvements including installing of baffles and aeration (including power, pump, and motor).

In addition to addressing the shortened treatment time, there is some accumulation of duckweed that will also be addressed with the ARPA funds.

An alternative solution to address the water quality challenges could be floating treatment wetlands. The man-made “floating islands” provide an ideal habitat for microbes and plant species that expand the treatment quality and nutrient removal. The floating wetlands also effectively increase the retention time. Floating wetlands have a much lower cost than dredging a pond but bi-annual vegetation management in the floating wetlands is required. This alternative should be carefully considered by the engineer of record familiar with the pond design.

4.3.12 Concord South Pond Rehabilitation (**WWIA2**)

The Concord South Pond includes a 1-acre oxidation pond with aeration and a 6-acre finishing pond. The pond sludge was dredged approximately 10 years ago, and the sludge levels should be assessed to determine if dredging is needed.

The South Pond treatment process includes screening and aeration, therefore septage is accepted only at South Pond. Concord only accepts residential septage and only 2 loads per day with a typical load being 2,000 gallons/load. Action item WWIA5 recommends tracking the septage loads received compared to the water quality of the effluent. Tracking data will show whether septage is impacting water quality (positively or negatively) and whether adjustments to the volume accepted are needed.

Concord is experiencing issues with duckweed and algae blooms. Solutions to address these can include additional retention time through additional baffles or other methods, improving aeration, ultrasound, in addition to chemical treatment and physical removal. The duckweed and algae need to be addressed to maintain treatment quality.

4.3.13 Flow Monitoring of Plant Influent & Effluent (**WWIA4**)

Influent and effluent flows data is useful for proactively identifying treatment issues, better understanding of I&I in the collection system, and planning for future expansions. Influent monitoring is strongly recommended to assist in I&I assessments. Automated monitoring of both influent and effluent is recommended. Until installed, manually read data should be stored in a spreadsheet and not just a notebook.

Effluent is manually measured in Concord and Zebulon in accordance with their wastewater permits. At a minimum, this data should be stored in a spreadsheet so that trends can be easily tracked. Inflow measurements should be added, whether manual or automated. Tracking inflow to outflow can highlight treatment issues or inefficiencies. Comparing inflow to rainfall data may provide insights into inflow and infiltration (I&I). Comparing inflow volume to effluent quality may determine whether I&I is creating treatment issues.

Both inflow and effluent data should be managed in a spreadsheet if not automatically monitored and stored in a supervisory control and data acquisition (SCADA) system.

4.3.14 Identify Priority I&I Sewershed (**WWIC1**)

I&I exists in every collection system, and an allowance of acceptable I&I is factored into collection system and water reclamation facility designs. Generally, it is unaffordable to fix every defect in a collection system, therefore it is important to define “excessive I&I” and establish priorities to address the worst I&I problems first. This Plan recommends identifying one sewershed to address first, and once the major I&I sources have been determined, the assessment begins on the second highest priority sewershed. The following data can be helpful in determining the highest priority sewershed.

- Lift station run-time data can indicate I&I. If a lift station pump runs for a longtime and continuously after a rain event or if the pump starts and stops frequently after a significant rain event, this can indicate I&I issues. The I&I is taxing the lift station resulting in higher energy costs and shorter pump life in addition to the excess wastewater treatment costs.

- Temporary flow meter and/or level sensors installed in manholes document the flow increase in response to rainfall events at a particular location. Temporary flow/level meters are not permanent so they can be used in different locations once data is collected. Flow meters can be used to calibrate models as well as target I&I, whereas level sensors show height of wastewater flow within the manhole as a sign of upstream I&I sources. Devices that do not require confined space entry are preferred. Some devices offer proprietary software that helps isolate I&I issues but may not be able to be exported for use with other models. Each system should consider their short-term and long-term needs for the data. For determining priority sewersheds, typically one device is in the downstream point of each possible priority sewershed and the sewershed with the largest, normalized rainfall response is prioritized.

- Wet weather SSO location history is often the easiest and most valuable method for isolating locations. The sewershed can be drawn with the pervasive SSO location as the downstream point.

- Anecdotal information from system operators is often valuable and can focus the assessment efforts in **WWIC2**.

Concord has identified the priority sewershed as the Hilltop Area and Zebulon has identified the east side of town. The assessment techniques will help determine the next priority sewershed after these sewersheds have been assessed.

4.3.15 Assess Priority Sewershed (**WWIC2**)

There are several tools to assess priority sewersheds (**WWIC1**) including the installation of temporary flow meters and/or level sensors, targeted smoke testing if inflow is expected, and closed-circuit television video (CCTV). The goal of the assessment is to winnow a large area with excessive I&I, down to much smaller areas (ideally specific defects or I&I sources) that can be cost effectively remediated. This is the key to making I&I reduction cost effective.

- Temporary flow meter and/or level sensors are installed in manholes and can be deployed throughout the sewershed to isolate the area with the biggest fluctuation in flows following rainfall events. Temporary flow meters and/or level sensors are often combined with one of the techniques below once the location of the I&I source has been further isolated.

- Smoke testing involves blowing dense colored smoke into the sanitary sewer system. The smoke will escape through holes in the system such as cracks, breaks, and illegal connections as well as through sewer vents in manhole covers. Personnel will look for smoke and determine whether the smoke indicates an I&I repair is needed. All I&I locations are documented. Smoke testing is relatively inexpensive but does not uncover all system defects.

- CCTV involves sending a special camera on wheels that rolls through the sewer system pipes and takes video of the inside of the pipe. The camera technician will document the location and rank the severity of defects observed following a standard methodology. The CCTV also uncovers clogs and breaks that might not be detected during smoke testing.

Many of the I&I sources may be found on private property (missing clean outs, failed laterals, yard/roof drain connections, etc.). Both Concord and Zebulon should develop clear delineations between the public and private systems, including whether lower laterals are public or private responsibility. Policies and procedures for addressing I&I sources found on private property are also recommended such as template notification letters and enforcement processes if private property issues are not addressed.

The cost-effective public CIP projects and/or maintenance activities identified during inspections should be placed on a spreadsheet-based capital improvement list and/or in a CMMS system. CIP projects should be prioritized based on criticality so that the most important pipes in the system are rehabilitated first and completed when budget and staffing resources are available.

4.3.16 Update Construction & Inspection Requirements (**IE3**)

Private contractors construct wastewater collection systems as part of private development projects and dedicate some of the infrastructure to the local municipality. Similarly, systems may hire contractors to rehabilitate or extend sewer pipelines to serve new areas. It is important to ensure that the systems each community is responsible for maintaining are constructed using materials and methods that will provide for long-term sustainability. Each wastewater system should develop requirements for new and rehabilitated wastewater collection assets that includes inspection requirements during and after construction to ensure the accepted infrastructure is not defective, and if needed, take advantage of available warranties. An example of collection system standards and specifications in included in Appendix D.

4.4 Implementation Timeline

Table 4-7 presents the recommended timeline for implementing the priority action items recommended in this Plan. The timeline generally reflects the initiation of each of the action items, while some of the action items may have ongoing elements following

program development. This timeline is a suggestion and must be matched to the available budgets and staffing resources.

Table 4-7. Implementation Timeline for Priority Action Items

	FY 2023				FY 2024			
	Q1	Q2	Q3	Q4	Q1	Q2	Q3	Q4
Overall Priority Implementation Actions								
OIA1. Share and Build GIS Data								
OIA3. Adopt Policies for Sustainable Growth								
OIB1. Evaluate Existing Rate Structure								
OIB2. Adopt Revised Rates								
Water Priority Implementation Actions								
IA1. Install Production Meters at Each Source								
IA2. Identify Non-Metered Service Connections								
IB1. New Supply to Meet Current Demands								
IC1. Map Fire Hydrants and Pipes in GIS								
IC2. Implement a Valve Assessment Program								
IE3. Update Construction & Inspection Requirements								
Wastewater Priority Implementation Actions								
WWIA1. Concord North Pond Rehabilitation								
WWIA2. Concord South Pond Rehabilitation								
WWIA4. Automated Flow Monitoring of Plant Influent & Effluent								
WWIC1. Identify Priority I/I Sewersheds								
WWIC2. Assess Priority Sewersheds								
WWID1. Update Construction & Inspection Requirements								

4.5 Progress and Plan Update

The PWPC meetings were valuable beyond the intent of guiding the development of this Plan. This Plan recommends that the PWPC continue to meet bi-annually or annually to review implementation progress and collaborate on water and wastewater issues of mutual interest.

This Plan recommends that the PWPC update the Plan, and review the demand and flow forecasts every 10 years so that action items can be tailored to actual development and growth patterns in Pike County.

5 Appendices

A – Implementation Plan by Community

B – GIS Data Dictionary

C – ISO Training Calculator

D – Construction & Inspection Requirement Examples

E – Policy and Procedure Examples

F – Rate Structure Evaluation Examples

APPENDIX A

IMPEMENTATION PLAN BY COMMUNITY

APPENDIX A: Implementation Plan by Community

Concord Summary Implementation Priority Actions

Concord is expected to exceed the current water supply capacity and wastewater treatment capacity around 2035. Concord recently completed emergency rehabilitation to the North Pond wastewater treatment pond and has plans for additional rehabilitation work on the North Pond and the South Pond.

The water distribution system and wastewater collection systems are aging and require investment.

Concord currently recovers only 60% of the operating costs through revenues. This is unsustainable and needs to be addressed to provide the funds for the necessary rehabilitation and expansion projects.

Population Projections

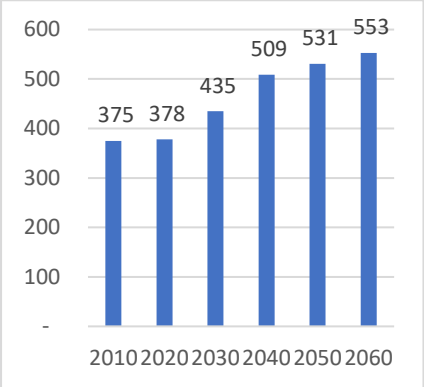

Water Demands & Supply

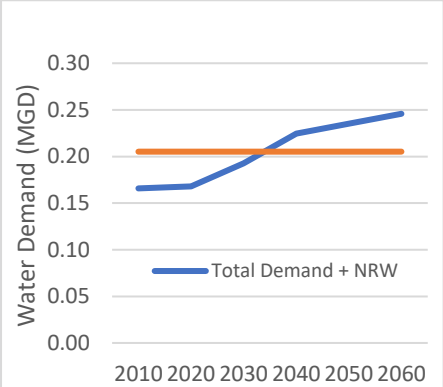

Wastewater Demands & Capacity

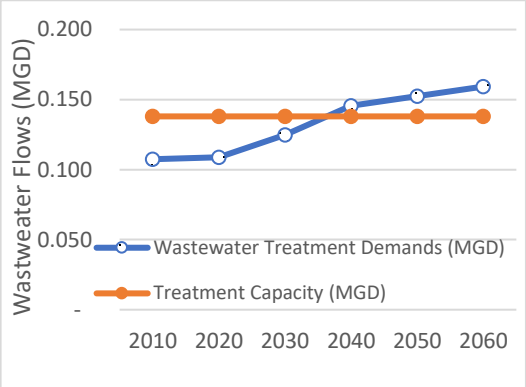

Concord's Highest Priority Action Items

OIIA. Evaluate Existing Rate Structure & OIIB. Adopt Revised Rates

Section 1.6 shows that Concord's cost recovery is only 0.6, meaning only 60% of operating costs are recovered by current rates. The water rates are lower than surrounding jurisdictions. Concord should study the current rates and adopt rates that will yield a recovery rate of 1.1.

WWIA1. Concord North Pond Rehabilitation & WWIA2. Concord South Pond Rehabilitation

Funds have been secured to address treatment quality issues in the North Pond. The planned project is a priority to ensure sufficient treatment in the pond. The South Pond has vegetation growth that needs to be addressed to maintain treatment quality. These are priority projects.

WWIC1. Identify Priority I&I Sewersheds & WWIC2. Assess Priority Sewersheds

There is a known I&I issue in the Hilltop Community. The excess water must be treated and may be aggravating the South Pond treatment issues. Finding and addressing the I&I source is a priority.

IB1. New Supply to Meet Current Demands & WWIIA2. Evaluate Concord Treatment Flows

Concord will exceed available water supply and wastewater treatment capacity in the 2060 planning horizon. Planning must start soon to ensure capacity for the future demands.

Meansville Summary Implementation Priority Actions

Meansville was the first water system permitted in Pike County with much of the system installed in 1950. Meansville has sufficient water supply to meet the projected demands but may exceed current supply just outside of the planning horizon. Meansville's highest priority actions focus on improvements to data management and system rehabilitation to reduce non-revenue water (NRW). One of the recommended action items is replacing the pump on Well #1 so that it operates at full capacity as an emergency supply option.

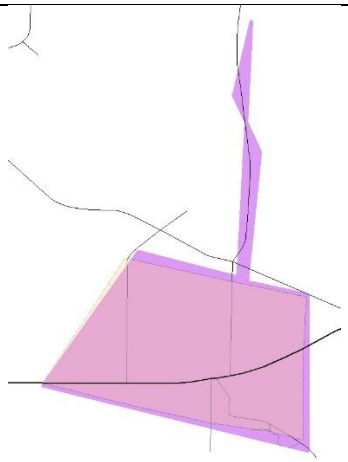

Population Projections

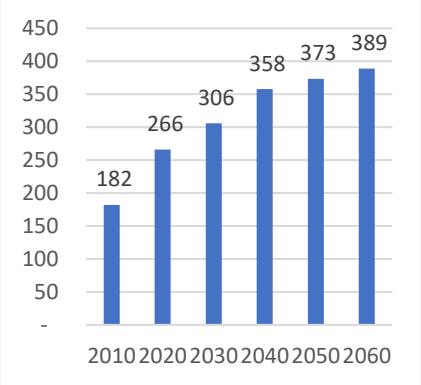

Water Demands & Supply

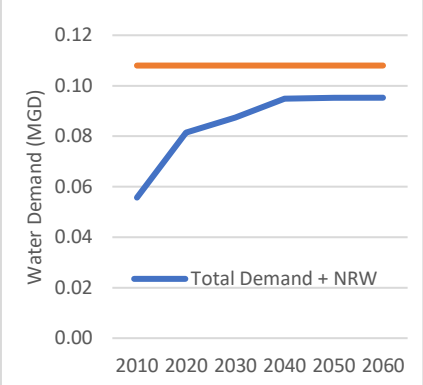

Meansville's Highest Priority Action Items

IA1. Install Automated Production Meters at Each Source & IA2. Identify Non-Metered Service Connections

Meansville manually reads the production meters and should store this data in excel until an automated production meter can be installed. A base goal for reducing NRW is metering all service connections, including city hall and the fire department. An audit of properties and meters will help identify any other non-metered connections.

IB2. Emergency Water Supply Plan

Currently Meansville is supplied by one fully functional well (well #3) and one partly functional well (well #1). Well #1 could be rehabilitated by replacing a pump that was struck by lightning. If fully functional, the system would have an emergency water supply source.

OIIA. Evaluate Existing Rate Structure & OIIB. Adopt Revised Rates

Section 1.6 shows that Meansville's cost recovery is 1.04, which is a little lower than the 1.10 target. The water system struggles to fund necessary projects. The rate evaluation should ensure that system maintenance, rehabilitation, and depreciation costs are included in current operating costs.

Molena Summary Implementation Priority Actions

Molena urgently needs additional water supply to meet the current and future demands. Molena's one active well requires uranium treatment which controls the rate of production. Funding the new water supply, a second storage tank, and other needed upgrades is a source of anxiety. Emergency repairs are typically more expensive than maintenance and rehabilitation, therefore most of the Plan's recommendations will help stabilize expenses.

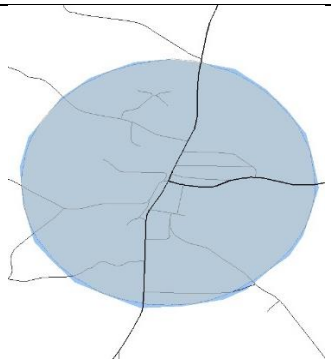

Population Projections

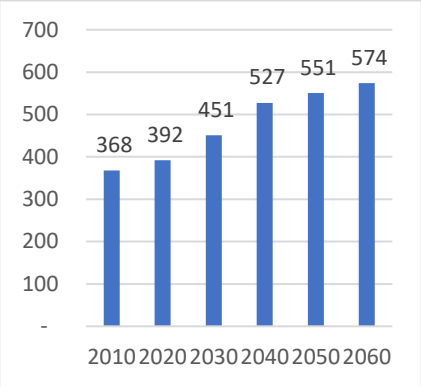

Water Demands & Supply

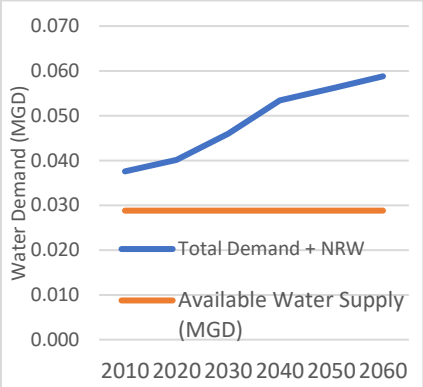

Molena's Highest Priority Action Items

IB1. New Supply to Meet Current Demands IB2. Emergency Water Supply Plan

Molena does not currently have sufficient water supply to meet demands. An additional potable water supply, either another well or interconnection with another system is needed and will be a major investment. During the planning process, Molena experienced a major leak that highlighted the need for additional supply. Molena should work with GEFA to request emergency funds and initiate construction funding discussions.

OIIA. Evaluate Existing Rate Structure & OIIB. Adopt Revised Rates

Section 1.6 shows that Molena's cost recovery is 0.97, which is a little lower than the 1.10 target. Funding necessary projects is difficult. The rate evaluation should ensure that system maintenance, rehabilitation, and depreciation costs are included in current operating costs.

IA1. Install Automated Production Meters at Each Source & IA2. Identify Non-Metered Service Connections

Molena manually reads the production meters and should store this data in excel until an automated production meter can be installed. A base goal for reducing NRW is metering all service connections, including city hall and the fire department. An audit of properties and meters will help identify any other non-metered connections, which will provide revenues for needed capital projects.

Williamson Summary Implementation Priority Actions

Williamson purchases water from Griffin and has sufficient supply to meet demands, which are expected to increase over the planning horizon. The Williamson distribution system was built in the early 1970s by volunteers. Some of the original pipes were upgraded but some of the connections were not properly abandoned. Williamson upgraded water meters in 2014 and all service connections are metered. Williamson is the only system in Pike County with a cost recovery ratio above 1.1, indicating revenues are sufficient to cover operating costs.

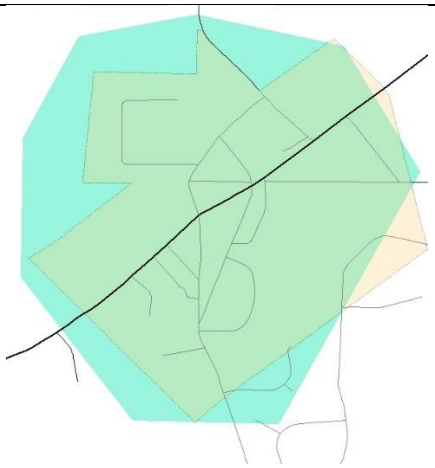

Population Projections

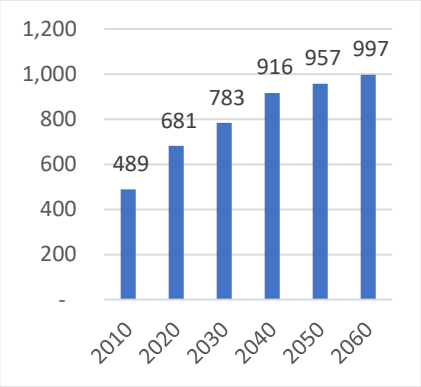

Water Demands & Supply

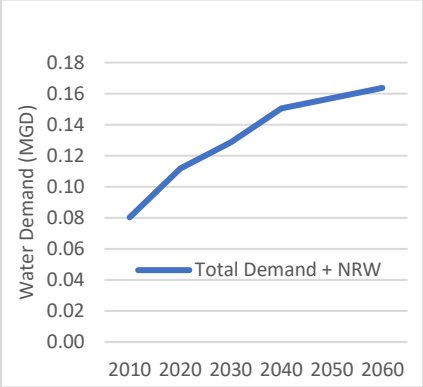

Williamson's Highest Priority Action Items

IC2. Implement a Valve Assessment and Mapping Program

Valves are critical components of the water system. The valves in Williamson are considered good but were not available digitally to convert to GIS. Mapping valves and exercising valves on a consistent schedule will ensure future operations.

IE1. Map the Water System in GIS

Williamson has mapping information for much of the water distribution system. Completing the system map will support future efforts to track NRW and a future water system modeling effort.

IE2. Implement Inspections & Maintenance Program

Create a systematic plan for inspections and maintenance of water system assets, documenting maintenance performed and needed capital improvements in excel or a CMMS system.

IIC1. Perform a Full Non-Revenue Water Audit

Williamson has found several sources of NRW. Once the GIS map is completed, the city will have the base data elements needed to complete a full NRW audit, which will prioritize cost-effective actions.

Zebulon Summary Implementation Priority Actions

Zebulon's customer base is expected to shift, as a higher percentage of new customers are expected to be non-residential, creating a bigger increase in water and sewer demands. Water is purchased from Griffin from two connection points and will meet future demands. Zebulon is planning to invest in the wastewater collection and treatment systems to serve this growth. The city expects to use the permitted surface water discharge in the next decade and will need additional wastewater treatment capacity in the planning horizon.

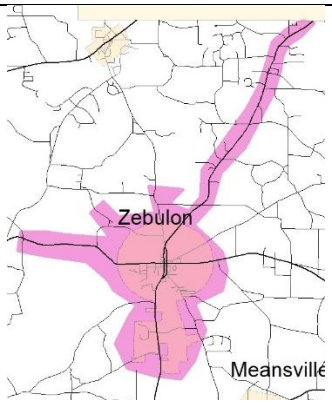

Population Projections

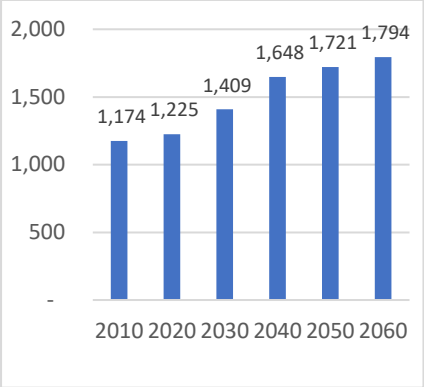

Water Demands & Supply

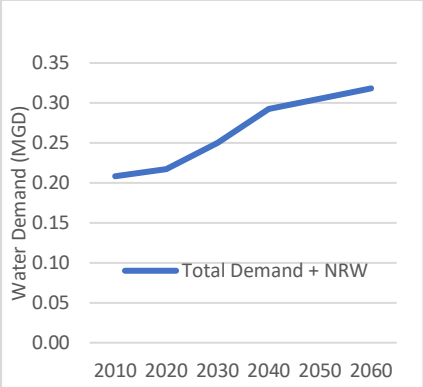

Wastewater Demands & Capacity

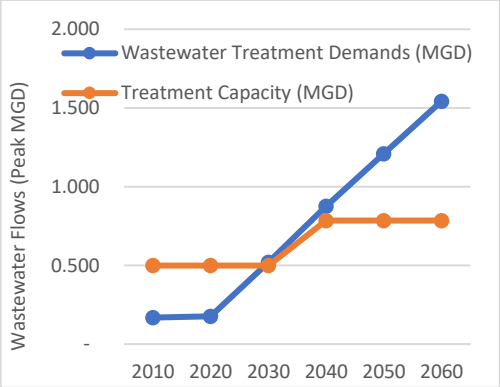

Zebulon's Highest Priority Action Items

OIIA. Evaluate Existing Rate Structure & OIIB. Adopt Revised Rates

Section 1.6 shows that Zebulon's cost recovery is 0.85, which is a little lower than the 1.10 target. The rate evaluation should ensure that system maintenance, rehabilitation, and depreciation costs are covered by rates.

WWIC1. Identify Priority I&I Sewersheds & WWIC2. Assess Priority Sewersheds

There are known I&I issues on the east side of the city. Finding and addressing the I&I source is a priority and will help extend the existing treatment capacity.

WWIA4. Automated Flow Monitoring of Plant Influent & Effluent

Track influent & effluent in either excel or automatically to better plan for plant expansion.

WWIBI. Collection System Map in GIS & WWIB2. Implement Inspections & Maintenance Program

Complete GIS mapping of collection system as a step toward modeling the system. The model should guide future expansion of the collection system.

WWIIA1. Evaluate Zebulon Treatment Expansion & WWIIA3. Evaluate Pumped Septage

Watch flows and plan for the use of the discharge permit alternative and future expansion. Consider disposal of septage pumped from Zebulon homes and businesses in expansion plans.

Pike County Summary Implementation Priority Actions

Pike County's priority action items emphasize collecting data and developing processes that will support the expansion of the system to meet anticipated development. Evaluating the current rate structure to ensure the rates support the planned improvements and expansion. Recommendations include collecting system data in GIS to facilitate future operations & maintenance, fire flow improvement, and rehabilitation effort. Pike County will meet the available water supply at the end of the planning horizon and needs to start the process for securing future supply.

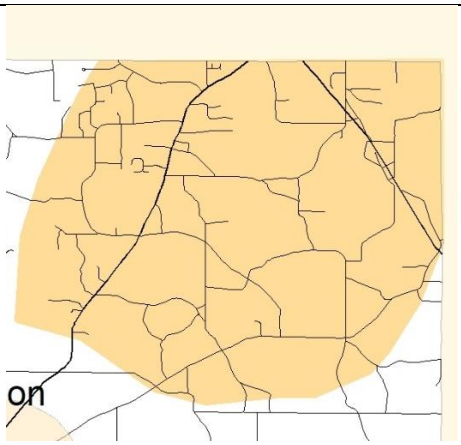

Population Projections

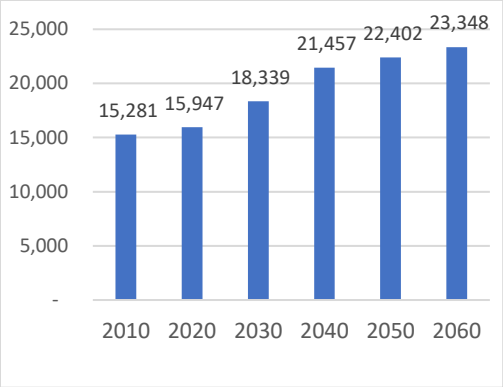

Water Demands & Supply

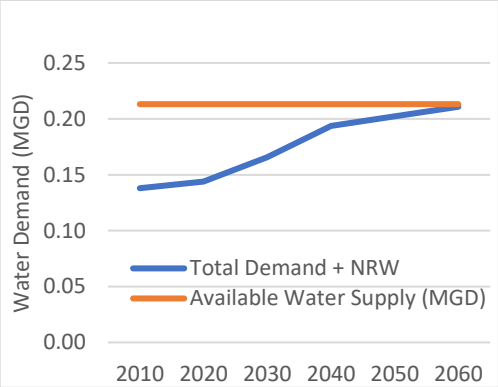

Pike County's Highest Priority Action Items

OIIA. Evaluate Existing Rate Structure & OIIB. Adopt Revised Rates

Section 1.6 shows that PCWSA's cost recovery is unknown. The rate evaluation should ensure that system maintenance, rehabilitation, and depreciation costs are considered in the 1.10 recovery target.

IE1. Map the Water System in GIS

PCWSA is interested in growing the current customer base and upgrading smaller pipelines to improve fire flow. A GIS map of the system provides the foundation for system modeling that will identify the most cost-effective strategies to meet both objectives.

IB1. New Supply to Meet Current Demands

Pike County demands reach available capacity at the end of the planning horizon. Efforts to identify future water supply sources should continue to ensure the supply is available when needed.

IC1. Map Fire Hydrants in GIS & IC2. Implement a Valve Assessment & Mapping Program & ID1. Perform Annual Hydrant Inspections & ID2. Budget for Volunteer Firefighter Training

Pike County is interested in improving the county's ISO rating. These tasks provide a cost-effective manner for improving the ISO score while developing the mapping and modeling to support cost-effective pipe replacements.

OIC. Adopt Policies for Sustainable Growth

Pike County should review the recommended policies including the water expansion policy, and adopt those that support the system goals.

APPENDIX B

GIS DATA DICTIONARY

Pike County Water Resources Management Plan

Water Distribution System
Data Dictionary

Introduction

This data dictionary is based off the Water Distribution Utility Network Foundation solution from Esri.

The Water Distribution Utility Network Foundation includes a data model that configures ArcGIS Enterprise and the ArcGIS Utility Network to represent water distribution networks. It deploys foundational services, simplifying the

More information can be found at: https://doc.arcgis.com/en/arcgis-solutions/latest/reference/introduction-to-

The data dictionary includes a description of the elements in the Water Distribution Utility Network Foundation. It will help you understand what elements are used to create the utility network and provide a description of what

A key note of the GIS structure in this template is the streamlining of feature classes. Instead of a feature class for each feature type (valves, meters, hydrants, mains, service lines, etc.), this model uses fewer feature classes, and employs an "asset group" field to differentiate assets. For example, the "Water Device" feature class includes meters, valves, pumps, and many more sub-groups.

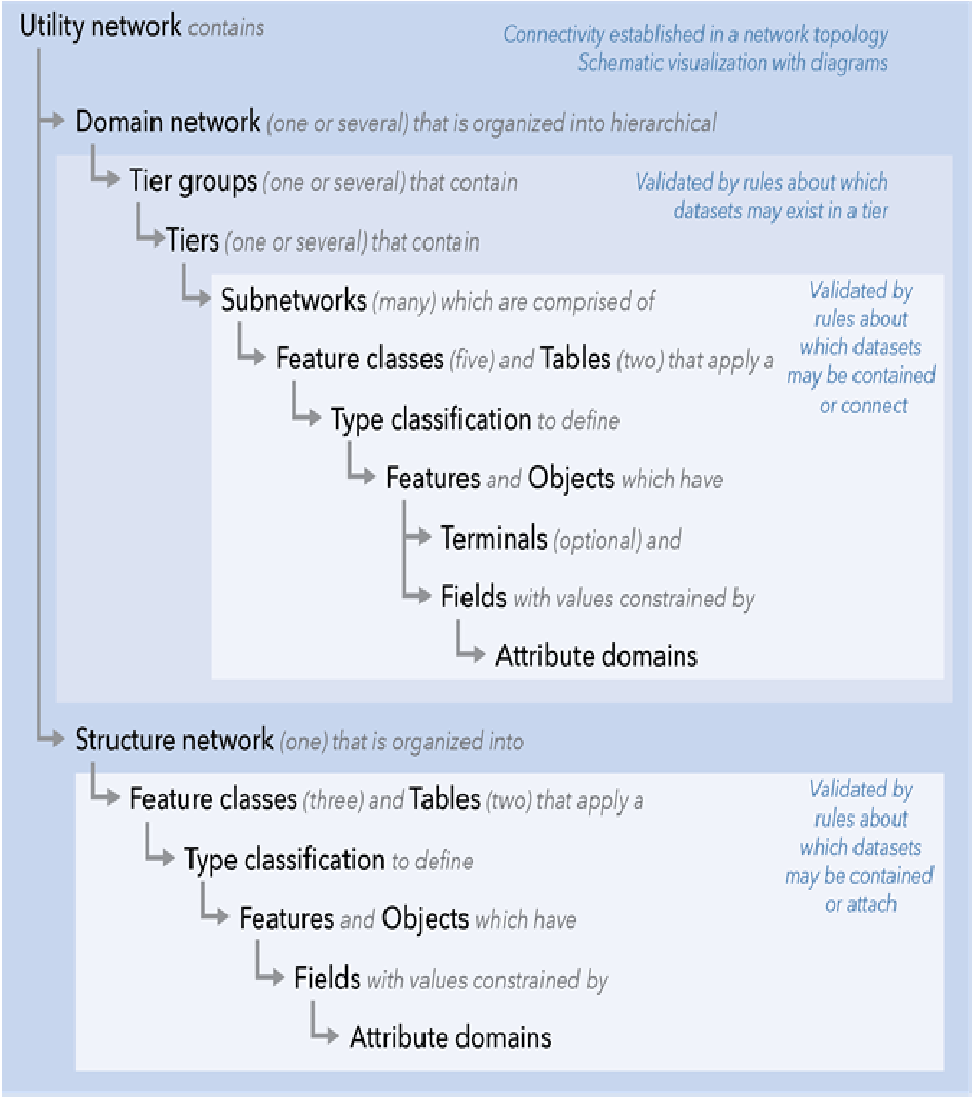

Water Supply: The Supply asset group in the WaterDevice feature class represents assets with a primary function of supplying water to the system.

Name	Alias	Type	Default Value	Domain	Domain Value Codes	Domain Value Names	Domain Descriptions
objectid	Object ID	OID					
assetgroup	Asset group	LONG					
assettype	Asset type	SHORT	0	Asset_Type_Water_Device_Supply	0 601 602 603 604 605	Unknown Water Treatment Plant Well (Groundwater) Interconnect River Intake Lake Intake	
associationstatus	Association status	SHORT	0	Water_6_AssociationStatus	0 1 2 4 5 6 8 9 12 13 16 17 18 24 25 32 36 40 44 48 56	None Container Structure Content Content and Container Content and Structure Attachment Attachment and Container Attachment and Content Attachment and Content and Container Visible Content Visible Content and Container Visible Content and Structure Visible Content and Attachment Visible Content and Attachment and Container Connectivity Connectivity and Content Connectivity and Attachment Connectivity and Attachment and Content Connectivity and Visible Content Connectivity and Visible Content and Attachment	Indicates how the feature participates in associations.
issubnetworkcontroller	Is subnetwork controller	SHORT	0	Water_6_IsSubnetworkController	0 1	False True	Indicates if a device feature is a subnetwork controller.
isconnected	Is connected	SHORT	2	Water_6_IsConnected	0 1 2	False True Unknown	Indicates if the feature is connected to a subnetwork controller.
subnetworkcontrollername	Subnetwork controller name	TEXT (2000)	Unknown				
tiername	Tier name	LONG	0	Water_6_TierName	0 1 2 3 4 5	Unknown Water Cathodic Protection Water System Water Pressure Water Isolation Water District Metered Areas (DMAs)	The tier names in the utility network.
tierrank	Tier rank	LONG	0				
terminalconfiguration	Terminal path	TEXT (128)	Default				
creationdate	Creation date	DATE					
creator	Creator	TEXT (255)					
lastupdate	Last update	DATE					
updatedby	Updated by	TEXT (255)					
shape	Shape	GEOMETRY					
globalid	Global ID	GUID					
cpsubnetworkname	CP Subnetwork Name	TEXT (2000)	Unknown				
systemsubnetworkname	System Subnetwork Name	TEXT (2000)	Unknown				
pressuresubnetworkname	Pressure Subnetwork Name	TEXT (2000)	Unknown				
isolationsubnetworkname	Isolation Subnetwork Name	TEXT (2000)	Unknown				
dmasubnetworkname	DMA Subnetwork Name	TEXT (2000)	Unknown				
name	Name	TEXT (64)					
installdate	Install Date	DATE					
assetid	Asset ID	TEXT (64)					
ownedby	Owned By	SHORT	1	Asset_Owner	1 2 3 4 5 6 7 100	Pike County WSA City of Zebulon City of Molena City of Concord City of Williamson City of Meansville Private Other	The owner of the asset.
maintby	Maintained By	SHORT	1	Asset_Manager	1 2 3 4 5 6 7 100	Pike County WSA City of Zebulon City of Molena City of Concord City of Williamson City of Meansville Private Other	The manager of the asset.
notes	Notes	TEXT (2000)					
symbolrotation	Symbol Rotation	SHORT		Symbol_Rotation			Valid rotation values
lastmaint	Last Maintenance	DATE					
lifecyclestatus	Lifecycle Status	SHORT	8	Lifecycle_Status	0 1 2 4 8 16 32 64 128 256	Unknown Proposed Approved Under Construction In Service To Be Retired Abandoned Retired Removed Out of Service	Valid lifecycle states for the assets.
bondedinsulated	Bonded/Insulated	SHORT		Bonded_Insulated	1 2	Bonded Insulated	Values to indicate if a feature is bonded or insulated
cptraceability	Cathodic Protection Traceability	SHORT	0	Yes_No	0 1 2	Unknown Yes No	Valid Yes, No values
inservicedate	In-Service Date	DATE					
retireddate	Retired Date	DATE					
spatialsource	Spatial Source	SHORT	0	Spatial_Source	0 1 2 3 4 5	Unknown As-Built CAD Digitized GPS/GNSS Field Sketch	Source of the data
spatialconfidence	Spatial Confidence	SHORT	0	Spatial_Confidence	0 1 2 3	Unknown High Medium Low	Confidence values for the data
cpoverride	Cathodic Protection Override	SHORT		CP_Traceability	1 2	Traceable Not Traceable	Valid cathodic protection status values

Water Storage Facilities: The Storage asset group in the WaterDevice feature class represents assets with a primary function of water storage as a point.

Name	Alias	Type	Default Value	Domain	Domain Value Codes	Domain Value Names	Domain Descriptions
objectid	Object ID	OID					
assetgroup	Asset group	LONG					
assettype	Asset type	SHORT	0	Asset_Type_Water_Device_Storage	0 561 562 563 564 565 566	Unknown Reservoir Standpipe Storage Tank Tower Surge Tank Hydropneumatic Tank	
associationstatus	Association status	SHORT	0	Water_6_AssociationStatus	0 1 2 4 5 6 8 9 12 13 16 17 18 24 25 32 36 40 44 48 56	None Container Structure Content Content and Container Content and Structure Attachment Attachment and Container Attachment and Content Attachment and Content and Container Visible Content Visible Content and Container Visible Content and Structure Visible Content and Attachment Visible Content and Attachment and Container Connectivity Connectivity and Content Connectivity and Attachment Connectivity and Attachment and Content Connectivity and Visible Content Connectivity and Visible Content and Attachment	Indicates how the feature participates in associations.
issubnetworkcontroller	Is subnetwork controller	SHORT	0	Water_6_IsSubnetworkController	0 1	False True	Indicates if a device feature is a subnetwork controller.
isconnected	Is connected	SHORT	2	Water_6_IsConnected	0 1 2	False True Unknown	Indicates if the feature is connected to a subnetwork controller.
subnetworkcontrollername	Subnetwork controller name	TEXT (2000)	Unknown				
tiername	Tier name	LONG	0	Water_6_TierName	0 1 2 3 4 5	Unknown Water Cathodic Protection Water System Water Pressure Water Isolation Water District Metered Areas (DMAs)	The tier names in the utility network.
tierrank	Tier rank	LONG	0				
terminalconfiguration	Terminal path	TEXT (128)	Default				
creationdate	Creation date	DATE					
creator	Creator	TEXT (255)					
lastupdate	Last update	DATE					
updatedby	Updated by	TEXT (255)					
shape	Shape	GEOMETRY					
globalid	Global ID	GUID					
cpsubnetworkname	CP Subnetwork Name	TEXT (2000)	Unknown				
systemsubnetworkname	System Subnetwork Name	TEXT (2000)	Unknown				
pressuresubnetworkname	Pressure Subnetwork Name	TEXT (2000)	Unknown				
isolationsubnetworkname	Isolation Subnetwork Name	TEXT (2000)	Unknown				
dmasubnetworkname	DMA Subnetwork Name	TEXT (2000)	Unknown				
diameter	Height	DOUBLE					
secondarydiameter	Width	DOUBLE					
pressure	Volume	DOUBLE					
normalstatus	Normal Status	SHORT	3	Pipeline_Device_Status	2 3	Inactive Active	Status of device
presentstatus	Present Status	SHORT	3	Pipeline_Device_Status	2 3	Inactive Active	Status of device
installdate	Install Date	DATE					
assetid	Asset ID	TEXT (64)					
ownedby	Owned By	SHORT	1	Asset_Owner	1 2 3 4 5 6 7 100	Pike County WSA City of Zebulon City of Molena City of Concord City of Williamson City of Meansville Private Other	The owner of the asset.
maintby	Maintained By	SHORT	1	Asset_Manager	1 2 3 4 5 6 7 100	Pike County WSA City of Zebulon City of Molena City of Concord City of Williamson City of Meansville Private Other	The manager of the asset.
notes	Notes	TEXT (2000)					
symbolrotation	Symbol Rotation	SHORT		Symbol_Rotation			Valid rotation values
lastmaint	Last Maintenance	DATE					
lifecyclestatus	Lifecycle Status	SHORT	8	Lifecycle_Status	0 1 2 4 8 16 32 64 128 256	Unknown Proposed Approved Under Construction In Service To Be Retired Abandoned Retired Removed Out of Service	Valid lifecycle states for the assets.
bondedinsulated	Bonded/Insulated	SHORT		Bonded_Insulated	1 2	Bonded Insulated	Values to indicate if a feature is bonded or insulated
cptraceability	Cathodic Protection Traceability	SHORT	0	Yes_No	0 1 2	Unknown Yes No	Valid Yes, No values
inservicedate	In-Service Date	DATE					
retireddate	Retired Date	DATE					
spatialsource	Spatial Source	SHORT	0	Spatial_Source	0 1 2 3 4 5	Unknown As-Built CAD Digitized GPS/GNSS Field Sketch	Source of the data
spatialconfidence	Spatial Confidence	SHORT	0	Spatial_Confidence	0 1 2 3	Unknown High Medium Low	Confidence values for the data
cpoverride	Cathodic Protection Override	SHORT		CP_Traceability	1 2	Traceable Not Traceable	Valid cathodic protection status values

Water Main: The Main asset group in the WaterLine feature class represents pipes with a role of distribution, transmission, or production.

Name	Alias	Type	Default Value	Domain	Domain Value Codes	Domain Value Names	Domain Descriptions
objectid	Object ID	OID					
assetgroup	Asset Group	LONG					
assettype	Asset type	SHORT	0	Asset_Type_Water_Line_Water_Main	0 1 2 3	Unknown Transmission Main Distribution Main Production	The Asset Types for the Water Line's Asset Group Water Main
isconnected	Is connected	SHORT	2	Water_6_IsConnected	0 1 2	False True Unknown	Indicates if the feature is connected to a subnetwork controller.
fromdeviceterminal	From device terminal	SHORT	0	Water_6_TerminalNames	0 1 2 3 4 5 6 7 8 9 10 11 12 13 14 15 16 17	None Single Terminal High Pressure In Low Pressure Out Low Pressure In High Pressure Out Inlet Port Outlet Port Port One Port Two Terminal One Terminal Two Terminal Three Terminal Four Terminal Five Terminal Six Terminal Seven Terminal Eight	The terminal names in the utility network.
todeviceterminal	To device terminal	SHORT	0	Water_6_TerminalNames	0 1 2 3 4 5 6 7 8 9 10 11 12 13 14 15 16 17	None Single Terminal High Pressure In Low Pressure Out Low Pressure In High Pressure Out Inlet Port Outlet Port Port One Port Two Terminal One Terminal Two Terminal Three Terminal Four Terminal Five Terminal Six Terminal Seven Terminal Eight	The terminal names in the utility network.
shape	Shape	GEOMETRY					
cpsubnetworkname	CP Subnetwork Name	TEXT (2000)	Unknown				
systemsubnetworkname	System Subnetwork Name	TEXT (2000)	Unknown				
pressuresubnetworkname	Pressure Subnetwork Name	TEXT (2000)	Unknown				
isolationsubnetworkname	Isolation Subnetwork Name	TEXT (2000)	Unknown				
dmasubnetworkname	DMA Subnetwork Name	TEXT (2000)	Unknown				
installdate	Install Date	DATE					
assetid	Asset ID	TEXT (64)					
ownedby	Owned By	SHORT	1	Asset_Owner	1 2 3 4 5 6 7 100	Pike County WSA City of Zebulon City of Molena City of Concord City of Williamson City of Meansville Private Other	The owner of the asset.
maintby	Maintained By	SHORT	1	Asset_Manager	1 2 100		The manager of the asset.
notes	Notes	TEXT (2000)					
diameter	Diameter	DOUBLE		Water_Main_Diameter	0 4 6 8 10 12 14 15 16 18 20 24 30 36 40 42 48 54 60 66 72 75	Unknown 4" 6" 8" 10" 12" 14" 15" 16" 18" 20" 24" 30" 36" 40" 42" 48" 54" 60" 66" 72" 75"	List of transmission main sizes, in Imperial units
measuredlength	Measured Length	DOUBLE					
adddetails	Tracer Wire	SHORT	0	Yes_No	0 1 2	Unknown Yes No	Valid Yes, No values
lifecyclestatus	Lifecycle Status	SHORT	8	Lifecycle_Status	0 1 2 4 8 16 32 64 128 256	Unknown Proposed Approved Under Construction In Service To Be Retired Abandoned Retired Removed Out of Service	Valid lifecycle states for the assets.
bondedinsulated	Bonded/Insulated	SHORT		Bonded_Insulated	1 2	Bonded Insulated	Values to indicate if a feature is bonded or insulated
cptraceability	Cathodic Protection Traceability	SHORT	0	Yes_No	0 1 2	Unknown Yes No	Valid Yes, No values
inservicedate	In-Service Date	DATE					
retiredsdate	Retired Date	DATE					
material	Material	SHORT	0	Water_Main_Material	0 81 82 83 84 85 86 87 88 89 90 91 92 93 94 95 96 97 98 99 100 101 102 103 104 105 106	Unknown Asbestos Cement - AC Brick - BR Cast Iron - CAS Copper - COP Concrete (Non-Reinforced) - CP Concrete Segments (Bolted) - CSB Concrete Segments (Unbolted) - CSU Ductile Iron - DIP Galvanized Pipe - GP Pitch Fiber (Orangeburg) - OB Plastic/Steel Composite - PSC Polyethylene - PE Polypropylene - PP Polyvinyl Chloride - PVC Steel - SP Transite - TTE Wood - WD Pre-stressed Concrete Cylinder Pipe - PCCP Pre-stressed Concrete Embedded Cylinder Pipe AWWA C-301 - PCPE Pre-stressed Concrete Lined Cylinder Pipe AWWA C-301 - PCPL Steel Cylinder Reinforced Concrete Pipe - SRC High Density Polyethylene - HDPE Unreinforced Concrete Pipe - URC Fiberglass Reinforced Pipe - FRP Reinforced Concrete Pipe - RCP Encasebd Pipe - CORR	Materials for water mains
cpoverride	Cathodic Protection Override	SHORT		CP_Traceability	1 2	Traceable Not Traceable	Valid cathodic protection status values
designtype	Water Type	SHORT	1	Water_Type	0 1 2 3 4	Unknown Potable Irrigation Fire Raw	List of water types
spatialsource	Spatial Source	SHORT	0	Spatial_Source	0 1 2 3 4 5	Unknown As-Built CAD Digitized GPS/GNSS Field Sketch	Source of the data
spatialconfidence	Spatial Confidence	SHORT	0	Spatial_Confidence	0 1 2 3	Unknown High Medium Low	Confidence values for the data

Service Lines: The Service asset group in the WaterLine feature class represents pipes providing service to devices.

Name	Alias	Type	Default Value	Domain	Domain Value Codes	Domain Value Names	Domain Descriptions
objectid	Object ID	OID					
assetgroup	Asset Group	LONG					
assettype	Asset type	SHORT	0	Asset_Type_Water_Line_Service	0 11 12 13 14 15 16 17 18 19	Unknown Residential Service Commercial Service Industrial Service Fire Service Hydrant Service Irrigation Service Sampling Service Blow Off Service Air and Vacuum Service	
isconnected	Is connected	SHORT	2	Water_6_IsConnected	0 1 2	False True Unknown	Indicates if the feature is connected to a subnetwork controller.
fromdeviceterminal	From device terminal	SHORT	0	Water_6_TerminalNames	0 1 2 3 4 5 6 7 8 9 10 11 12 13 14 15 16 17	None Single Terminal High Pressure In Low Pressure Out Low Pressure In High Pressure Out Inlet Port Outlet Port Port One Port Two Terminal One Terminal Two Terminal Three Terminal Four Terminal Five Terminal Six Terminal Seven Terminal Eight	The terminal names in the utility network.
todeviceterminal	To device terminal	SHORT	0	Water_6_TerminalNames	0 1 2 3 4 5 6 7 8 9 10 11 12 13 14 15 16 17	None Single Terminal High Pressure In Low Pressure Out Low Pressure In High Pressure Out Inlet Port Outlet Port Port One Port Two Terminal One Terminal Two Terminal Three Terminal Four Terminal Five Terminal Six Terminal Seven Terminal Eight	The terminal names in the utility network.
shape	Shape	GEOMETRY					
cpsubnetworkname	CP Subnetwork Name	TEXT (2000)	Unknown				
systemsubnetworkname	System Subnetwork Name	TEXT (2000)	Unknown				
pressuresubnetworkname	Pressure Subnetwork Name	TEXT (2000)	Unknown				
isolationsubnetworkname	Isolation Subnetwork Name	TEXT (2000)	Unknown				
dmasubnetworkname	DMA Subnetwork Name	TEXT (2000)	Unknown				
installdate	Install Date	DATE					
assetid	Asset ID	TEXT (64)					
ownedby	Owned By	SHORT	1	Asset_Owner	1 2 3 4 5 6 7 100	Pike County WSA City of Zebulon City of Molena City of Concord City of Williamson City of Meansville Private Other	The owner of the asset.
maintby	Maintained By	SHORT	1	Asset_Manager	1 2 3 4 5 6 7 100	Pike County WSA City of Zebulon City of Molena City of Concord City of Williamson City of Meansville Private Other	The manager of the asset.
notes	Notes	TEXT (2000)					
diameter	Diameter	DOUBLE		Water_Service_Diameter	0 0.5 0.75 1 1.25 1.5 2 2.25 2.5 3 4 4.5 5.25 6 8 10	Unknown 1/2" 3/4" 1" 1 1/4" 1 1/2" 2" 2 1/4" 2 1/2" 3" 4" 4 1/2" 5 1/4" 6" 8" 10"	General list of service sizes, in Imperial units
measuredlength	Measured Length	DOUBLE					
adddetails	Tracer Wire	SHORT	0	Yes_No	0 1 2	Unknown Yes No	Valid Yes, No values
lifecyclestatus	Lifecycle Status	SHORT	8	Lifecycle_Status	0 1 2 4 8 16 32 64 128 256	Unknown Proposed Approved Under Construction In Service To Be Retired Abandoned Retired Removed Out of Service	Valid lifecycle states for the assets.
bondedinsulated	Bonded/Insulated	SHORT		Bonded_Insulated	1 2	Bonded Insulated	Values to indicate if a feature is bonded or insulated
cptraceability	Cathodic Protection Traceability	SHORT	0	Yes_No	0 1 2	Unknown Yes No	Valid Yes, No values
inservicedate	In-Service Date	DATE					
retireddate	Retired Date	DATE					
material	Material	SHORT	0	Water_Service_Material	0 83 84 88 94 109	Unknown Cast Iron - CAS Copper - COP Ductile Iron - DIP Polyvinyl Chloride - PVC Lead - LP	Materials for water service lines
cpoverride	Cathodic Protection Override	SHORT		CP_Traceability	1 2	Traceable Not Traceable	Valid cathodic protection status values
designtype	Water Type	SHORT	1	Water_Type	0 1 2 3 4	Unknown Potable Irrigation Fire Raw	List of water types
spatialsource	Spatial Source	SHORT	0	Spatial_Source	0 1 2 3 4 5	Unknown As-Built CAD Digitized GPS/GNSS Field Sketch	Source of the data
spatialconfidence	Spatial Confidence	SHORT	0	Spatial_Confidence	0 1 2 3	Unknown High Medium Low	Confidence values for the data

Water Valves: The Controllable Valve asset group in the WaterDevice feature class represents valves with a primary purpose of enabling or restricting the flow of water.

Name	Alias	Type	Default Value	Domain	Domain Value Codes	Domain Value Names	Domain Descriptions
objectid	Object ID	OID					
assetgroup	Asset group	LONG					
assettype	Asset type	SHORT	0	Asset_Type_Water_Device_Controllable_Valve	0 161 164 167 169 170 171 172 173 174 175 176	Unknown Blow Off Hydrant Isolation Zone Supply System Sampling Pressure Zone Bypass Purge Interconnect Service	
associationstatus	Association status	SHORT	0	Water_6_AssociationStatus	0 1 2 4 5 6 8 9 12 13 16 17 18 24 25 32 36 40 44 48 56	None Container Structure Content Content and Container Content and Structure Attachment Attachment and Container Attachment and Content Attachment and Content and Container Visible Content Visible Content and Container Visible Content and Structure Visible Content and Attachment Visible Content and Attachment and Container Connectivity Connectivity and Content Connectivity and Attachment Connectivity and Attachment and Content Connectivity and Visible Content Connectivity and Visible Content and Attachment	Indicates how the feature participates in associations.
issubnetworkcontroller	Is subnetwork controller	SHORT	0	Water_6_IsSubnetworkController	0 1	False True	Indicates if a device feature is a subnetwork controller.
isconnected	Is connected	SHORT	2	Water_6_IsConnected	0 1 2	False True Unknown	Indicates if the feature is connected to a subnetwork controller.
subnetworkcontrollername	Subnetwork controller name	TEXT (2000)	Unknown				
tiername	Tier name	LONG	0	Water_6_TierName	0 1 2 3 4 5	Unknown Water Cathodic Protection Water System Water Pressure Water Isolation Water District Metered Areas (DMAs)	The tier names in the utility network.
tierrank	Tier rank	LONG	0				
terminalconfiguration	Terminal path	TEXT (128)	Default				
creationdate	Creation date	DATE					
creator	Creator	TEXT (255)					
lastupdate	Last update	DATE					
updatedby	Updated by	TEXT (255)					
shape	Shape	GEOMETRY					
globalid	Global ID	GUID					
cpsubnetworkname	CP Subnetwork Name	TEXT (2000)	Unknown				
systemsubnetworkname	System Subnetwork Name	TEXT (2000)	Unknown				
pressuresubnetworkname	Pressure Subnetwork Name	TEXT (2000)	Unknown				
isolationsubnetworkname	Isolation Subnetwork Name	TEXT (2000)	Unknown				
dmasubnetworkname	DMA Subnetwork Name	TEXT (2000)	Unknown				
diameter	Diameter	DOUBLE	0	Water_Diameter	0 0.5 0.75 1 1.25 1.5 2 2.5 3 4 6 8 10 12 14 15 16 18 20 24 30 36 40 42 48 54 60	Unknown 1/2" 3/4" 1" 1 1/4" 1 1/2" 2" 2 1/2" 3" 4" 6" 8" 10" 12" 14" 15" 16" 18" 20" 24" 30" 36" 40" 42" 48" 54" 60"	General domain for the diameter of water assets, in Imperial units
designtype	Valve Type	SHORT		Water_Valve_Type	0 20 21 22 23 24	Unknown Ball Butterfly Cone Gate Plug	Types of controllable water valves
normalstatus	Normal Status	SHORT	1	Pipeline_Valve_Status	0 1	Closed Open	The status of a water device
presentstatus	Present Status	SHORT	1	Pipeline_Valve_Status	0 1	Closed Open	The status of a water device
additionaldetails	Clockwise to Close	SHORT	1	Pipeline_Valve_Close_Direction	0 1	Counter Clockwise Clockwise	The close direction of a valve
designinfo	Turns to Close	DOUBLE					
operable	Operable	SHORT		Boolean	0 1	False True	True or False
name	Name	TEXT (64)					
installdate	Install Date	DATE					
assetid	Asset ID	TEXT (64)					
ownedby	Owned By	SHORT	1	Asset_Owner	1 2 3 4 5 6 7 100	Pike County WSA City of Zebulon City of Molena City of Concord City of Williamson City of Meansville Private Other	The owner of the asset.
maintby	Maintained By	SHORT	1	Asset_Manager	1 2 3 4 5 6 7 100	Pike County WSA City of Zebulon City of Molena City of Concord City of Williamson City of Meansville Private Other	The manager of the asset.
additionaldevice	Has Bypass	SHORT	0	Yes_No	0 1 2	Unknown Yes No	Valid Yes, No values

notes	Notes	TEXT (2000)					
symbolrotation	Symbol Rotation	SHORT		Symbol_Rotation			Valid rotation values
lastmaint	Last Maintenance	DATE					
lifecyclestatus	Lifecycle Status	SHORT	8	Lifecycle_Status	0 1 2 4 8 16 32 64 128 256	Unknown Proposed Approved Under Construction In Service To Be Retired Abandoned Retired Removed Out of Service	Valid lifecycle states for the assets.
bondedinsulated	Bonded/Insulated	SHORT		Bonded_Insulated	1 2	Bonded Insulated	Values to indicate if a feature is bonded or insulated
cptraceability	Cathodic Protection Traceability	SHORT	0	Yes_No	0 1 2	Unknown Yes No	Valid Yes, No values
inservicedate	In-Service Date	DATE					
retireddate	Retired Date	DATE					
spatialsource	Spatial Source	SHORT	0	Spatial_Source	0 1 2 3 4 5	Unknown As-Built CAD Digitized GPS/GNSS Field Sketch	Source of the data
spatialconfidence	Spatial Confidence	SHORT	0	Spatial_Confidence	0 1 2 3	Unknown High Medium Low	Confidence values for the data
cpoverride	Cathodic Protection Override	SHORT		CP_Traceability	1 2	Traceable Not Traceable	Valid cathodic protection status values

Water Pump Stations: The Pump asset group in the WaterDevice feature class represents facilities that move, compress, or alters the pressure of a fluid.

Name	Alias	Type	Default Value	Domain	Domain Value Codes	Domain Value Names	Domain Descriptions
objectid	Object ID	OID					
assetgroup	Asset group	LONG					
assettype	Asset type	SHORT	0	Asset_Type_Water_Device_Pump	0 281 282 283	Unknown Booster Chemical Primary	
associationstatus	Association status	SHORT	0	Water_6_AssociationStatus	0 1 2 4 5	None Container Structure Content Content and Container	Indicates how the feature participates in associations.
issubnetworkcontroller	Is subnetwork controller	SHORT	0	Water_6_IsSubnetworkController	0 1	False True	Indicates if a device feature is a subnetwork controller.
isconnected	Is connected	SHORT	2	Water_6_IsConnected	0 1 2	False True Unknown	Indicates if the feature is connected to a subnetwork controller.
subnetworkcontrollername	Subnetwork controller name	TEXT (2000)	Unknown				
tiername	Tier name	LONG	0	Water_6_TierName	0 1 2 3 4 5	Unknown Water Cathodic Protection Water System Water Pressure Water Isolation Water District Metered Areas (DMAs)	The tier names in the utility network.
tierrank	Tier rank	LONG	0				
terminalconfiguration	Terminal path	TEXT (128)	Default				
creationdate	Creation date	DATE					
creator	Creator	TEXT (255)					
lastupdate	Last update	DATE					
updatedby	Updated by	TEXT (255)					
shape	Shape	GEOMETRY					
globalid	Global ID	GUID					
cpsubnetworkname	CP Subnetwork Name	TEXT (2000)	Unknown				
systemsubnetworkname	System Subnetwork Name	TEXT (2000)	Unknown				
pressuresubnetworkname	Pressure Subnetwork Name	TEXT (2000)	Unknown				
isolationsubnetworkname	Isolation Subnetwork Name	TEXT (2000)	Unknown				
dmasubnetworkname	DMA Subnetwork Name	TEXT (2000)	Unknown				
diameter	Inlet Diameter	DOUBLE	0	Water_Pump_Diameter	0 4 6 8 10 12 14 15 16 18 20 24 36 48	Unknown 4" 6" 8" 10" 12" 14" 15" 16" 18" 20" 24" 36" 48"	Sizes of pumps
secondarydiameter	Outlet Diameter	DOUBLE	0	Water_Pump_Diameter	0 4 6 8 10 12 14 15 16 18 20 24 36 48	Unknown 4" 6" 8" 10" 12" 14" 15" 16" 18" 20" 24" 36" 48"	Sizes of pumps
pressure	Rated Pressure	DOUBLE					
designtype	Pump Type	SHORT	0	Water_Pump_Type	0 40 41 42 43 44 45	Unknown Axial Flow Centrifugal Jet Reciprocating Rotary Turbine	The different types of pump designs.
normalstatus	Normal Status	SHORT	3	Pipeline_Device_Status	2 3	Inactive Active	Status of device
presentstatus	Present Status	SHORT	3	Pipeline_Device_Status	2 3	Inactive Active	Status of device
designinfo	Rated Flow	DOUBLE					
operable	Operable	SHORT	1	Boolean	0 1	False True	True or False
name	Name	TEXT (64)					
installdate	Install Date	DATE					
assetid	Asset ID	TEXT (64)					
ownedby	Owned By	SHORT	1	Asset_Owner	1 2 3 4 5 6 7 100	Pike County WSA City of Zebulon City of Molena City of Concord City of Williamson City of Meansville Private Other	The owner of the asset.
maintby	Maintained By	SHORT	1	Asset_Manager	1 2 3 4 5 6 7 100	Pike County WSA City of Zebulon City of Molena City of Concord City of Williamson City of Meansville Private Other	The manager of the asset.
notes	Notes	TEXT (2000)					
symbolrotation	Symbol Rotation	SHORT		Symbol_Rotation			Valid rotation values
lastmaint	Last Maintenance	DATE					

lifecyclestatus	Lifecycle Status	SHORT	8	Lifecycle_Status	0 1 2 4 8 16 32 64 128 256	Unknown Proposed Approved Under Construction In Service To Be Retired Abandoned Retired Removed Out of Service	Valid lifecycle states for the assets.
bondedinsulated	Bonded/Insulated	SHORT		Bonded_Insulated	1 2	Bonded Insulated	Values to indicate if a feature is bonded or insulated
cptraceability	Cathodic Protection Traceability	SHORT	0	Yes_No	0 1 2	Unknown Yes No	Valid Yes, No values
inservicedate	In-Service Date	DATE					
retireddate	Retired Date	DATE					
spatialsource	Spatial Source	SHORT	0	Spatial_Source	0 1 2 3 4 5	Unknown As-Built CAD Digitized GPS/GNSS Field Sketch	Source of the data
spatialconfidence	Spatial Confidence	SHORT	0	Spatial_Confidence	0 1 2 3	Unknown High Medium Low	Confidence values for the data
cpoverride	Cathodic Protection Override	SHORT		CP_Traceability	1 2	Traceable Not Traceable	Valid cathodic protection status values

Meters: The Meter asset group in the WaterDevice feature class represents water meters.

Name	Alias	Type	Default Value	Domain	Domain Value Codes	Domain Value Names	Domain Descriptions	Notes
objectid	Object ID	OID						
assetgroup	Asset group	LONG						
assettype	Asset type	SHORT	0	Asset_Type_Water_Device_Meter	0 41 42 43 44 45 46 47 48	Unknown Bulk Commercial DMA Emergency Connection Industrial Master Pump Station Residential	Indicates the asset Types for the Water Device's Asset Group Meter	Consider modifying the domain to suit the needs of the utility
associationstatus	Association status	SHORT	0	Water_6_AssociationStatus	0 1 2 4 5 6 8 9 12 13 16 17 18 24 25 32 36 40 44 48 56	None Container Structure Content Content and Container Content and Structure Attachment Attachment and Container Attachment and Content Attachment and Content and Container Visible Content Visible Content and Container Visible Content and Structure Visible Content and Attachment Visible Content and Attachment and Container Connectivity Connectivity and Content Connectivity and Attachment Connectivity and Attachment and Content Connectivity and Visible Content Connectivity and Visible Content and Attachment	Indicates how the feature participates in associations.	Should use 32: Conectivity-Feature participates in a connectivity association with another feature
issubnetworkcontroller	Is subnetwork controller	SHORT	0	Water_6_IsSubnetworkController	0 1	False True	Indicates if a device feature is a subnetwork controller.	Subnetworks should be implemented at a later date to support tracing capabilities
isconnected	Is connected	SHORT	2	Water_6_IsConnected	0 1 2	False True Unknown	Indicates if the feature is connected to a subnetwork controller.	Subnetworks should be implemented at a later date to support tracing capabilities
subnetworkcontrollername	Subnetwork controller name	TEXT (2000)	Unknown					Subnetworks should be implemented at a later date to support tracing capabilities
tiername	Tier name	LONG	0	Water_6_TierName	0 1 2 3 4 5	Unknown Water Cathodic Protection Water System Water Pressure Water Isolation Water District Metered Areas (DMAs)	The tier names in the utility network.	More than liekly the meters will be in the Water System Tier, unless the meters are part of a DMA
tierrank	Tier rank	LONG	0					Will need to be identified in Utility Configuration
terminalconfiguration	Terminal path	TEXT (128)	Default					Will need to be identified in Utility Configuration
creationdate	Creation date	DATE						
creator	Creator	TEXT (255)						
lastupdate	Last update	DATE						
updatedby	Updated by	TEXT (255)						
shape	Shape	GEOMETRY						
globalid	Global ID	GUID						
cpsubnetworkname	CP Subnetwork Name	TEXT (2000)	Unknown					Subnetworks should be implemented at a later date to support tracing capabilities
systemsubnetworkname	System Subnetwork Name	TEXT (2000)	Unknown					Subnetworks should be implemented at a later date to support tracing capabilities
pressuresubnetworkname	Pressure Subnetwork Name	TEXT (2000)	Unknown					Subnetworks should be implemented at a later date to support tracing capabilities
isolationsubnetworkname	Isolation Subnetwork Name	TEXT (2000)	Unknown					Subnetworks should be implemented at a later date to support tracing capabilities
dmasubnetworkname	DMA Subnetwork Name	TEXT (2000)	Unknown					Subnetworks should be implemented at a later date to support tracing capabilities
diameter	Diameter	DOUBLE	0	Water_Meter_Diameter	0 0.5 0.625 0.75 1 1.25 1.5 2 2.25 2.5 3 4 4.5 5.25 6 8 10 12 14 15 16 18 20 24	Unknown 1/2" 5/8" 3/4" 1" 1 1/4" 1 1/2" 2" 2 1/4" 2 1/2" 3" 4" 4 1/2" 5 1/4" 6" 8" 10" 12" 14" 15" 16" 18" 20" 24"		
installdate	Install Date	DATE						
assetid	Asset ID	TEXT (64)						Should be a unique id across all subtypes, consider a alpha numeric combination like WM-# to represent a water meter ID
accountid	Account ID	TEXT (50)						Should be the account number from billing system

ownedby	Owned By	SHORT	1	Asset_Owner	1 2 3 4 5 6 7 100	Pike County WSA City of Zebulon City of Molena City of Concord City of Williamson City of Meansville Private Other	The owner of the asset.	
maintby	Maintained By	SHORT	1	Asset_Manager	1 2 3 4 5 6 7 100	Pike County WSA City of Zebulon City of Molena City of Concord City of Williamson City of Meansville Private Other	The manager of the asset.	
notes	Notes	TEXT (2000)						
symbolrotation	Symbol Rotation	SHORT		Symbol_Rotation			Valid rotation values	Wouldn't worry about this one
lastmaint	Last Maintenance	DATE						
lifecyclestatus	Lifecycle Status	SHORT	8	Lifecycle_Status	0 1 2 4 8 16 32 64 128 256	Unknown Proposed Approved Under Construction In Service To Be Retired Abandoned Retired Removed Out of Service	Valid lifecycle states for the assets.	
bondedinsulated	Bonded/Insulated	SHORT		Bonded_Insulated	1 2	Bonded Insulated	Values to indicate if a feature is bonded or insulated	Only relates to cathodic protection
cptraceability	Cathodic Protection Traceability	SHORT	0	Yes_No	0 1 2	Unknown Yes No	Valid Yes, No values	Only relates to cathodic protection
inservicedate	In-Service Date	DATE						
retireddate	Retired Date	DATE						
spatialsource	Spatial Source	SHORT	0	Spatial_Source	0 1 2 3 4 5	Unknown As-Built CAD Digitized GPS/GNSS Field Sketch	Source of the data	
spatialconfidence	Spatial Confidence	SHORT	0	Spatial_Confidence	0 1 2 3	Unknown High Medium Low	Confidence values for the data	
cpoverride	Cathodic Protection Override	SHORT		CP_Traceability	1 2	Traceable Not Traceable	Valid cathodic protection status values	Only relates to cathodic protection
serialnumber	Serial Number	LONG					Field to keep meter serial number	
miu	Meter Interface Unit	Long					Field to keep MIU serial number	Only relates to AMI/AMR
manufacturer	Meter Manufacturer	SHORT		Meter_Manufacturer	0 1 2 3 4	Unknown Badger Kamstrup Neptune Sensus	Manufacturer	This list is not comprehensive and will depend on the population of meters in their system
model	Model Number	TEXT (128)					Model number of the meter	Will need to be entered during field data colleciton if records do not exist

Fire Hydrants: The Fire Hydrant asset group in the WaterDevice feature class represents fire hydrants.

Name	Alias	Type	Default Value	Domain	Domain Value Codes	Domain Value Names	Domain Descriptions
objectid	Object ID	OID					
assetgroup	Asset group	LONG					
assettype	Asset type	SHORT	0	Asset_Type_WaterDevice_Fire_Hydrant	0 321 322 323 324	Unknown Hydrant Dry Hydrant Cisterns Other	
asset_other	Asset alt	SHORT	0		0 1	No Suction Point Suction Point	Indicates whether suction points are used as an alternative water supply
associationstatus	Association status	SHORT	0	Water_6_AssociationStatus	0 1 2 4 5 6 8 9 12 13 16 17 18 24 25 32 36 40 44 48 56	None Container Structure Content Content and Container Content and Structure Attachment Attachment and Container Attachment and Content Attachment and Content and Container Visible Content Visible Content and Container Visible Content and Structure Visible Content and Attachment Visible Content and Attachment and Container Connectivity Connectivity and Content Connectivity and Attachment Connectivity and Attachment and Content Connectivity and Visible Content Connectivity and Visible Content and Attachment	Indicates how the feature participates in associations.
issubnetworkcontroller	Is subnetwork controller	SHORT	0	Water_6_IsSubnetworkController	0 1	False True	Indicates if a device feature is a subnetwork controller.
isconnected	Is connected	SHORT	2	Water_6_IsConnected	0 1 2	False True Unknown	Indicates if the feature is connected to a subnetwork controller.
subnetworkcontrollername	Subnetwork controller name	TEXT (2000)	Unknown				
tiername	Tier name	LONG	0	Water_6_TierName	0 1 2 3 4 5	Unknown Water Cathodic Protection Water System Water Pressure Water Isolation Water District Metered Areas (DMAs)	The tier names in the utility network.
tierrank	Tier rank	LONG	0				
terminalconfiguration	Terminal path	TEXT (128)	Default				
creationdate	Creation date	DATE					
creator	Creator	TEXT (255)					
lastupdate	Last update	DATE					
updatedby	Updated by	TEXT (255)					
shape	Shape	GEOMETRY					
globalid	Global ID	GUID					
cpsubnetworkname	CP Subnetwork Name	TEXT (2000)	Unknown				
systemsubnetworkname	System Subnetwork Name	TEXT (2000)	Unknown				
pressuresubnetworkname	Pressure Subnetwork Name	TEXT (2000)	Unknown				

Name	Alias	Type	Default Value	Domain	Domain Value Codes	Domain Value Names	Domain Descriptions
isolationsubnetworkname	Isolation Subnetwork Name	TEXT (2000)	Unknown				
dmasubnetworkname	DMA Subnetwork Name	TEXT (2000)	Unknown				
diameter	Diameter	DOUBLE	0	Water_Hydrant_Service_Diameter	0 4 4.5 5.25 6 8 10	Unknown 4" 4 1/2" 5 1/4" 6" 8" 10"	List of hydrant service sizes, in Imperial units
secondarydiameter	Nozzle Diameter	DOUBLE	0	Water_Hydrant_Nozzle_Diameter	0 2.5 4.5 5 6 4 5.25	Unknown 2 1/2" 4 1/2" 5" 6" 4" 5 1/4"	Sizes of a fire hydrants nozzle, in Imperial units
designtype	Manufacturer	SHORT	0	Water_Fire_Hydrant_Manufacturer	0 60 61 62 63 64 65 66 67 68 69 70 71 72 73	Unknown American Darling Clow Corporation Corey Dresser Eddy Iowa Valve Kennedy Valve M&H Valve Mueller Company Traverse City US Pipe Waterous Wood-Matthews Other	The valid hydrant manufacturers
presentstatus	Present Status	SHORT	3	Pipeline_Device_Status	2 3	Inactive Active	Status of device
installdate	Install Date	DATE					
assetid	Asset ID	TEXT (64)					
ownedby	Owned By	SHORT	1	Asset_Owner	1 2 100	Pike County WSA City of Zebulon City of Molena City of Concord City of Williamson City of Meansville Private Other	The owner of the asset.
maintby	Maintained By	SHORT	1	Asset_Manager	1 2 100	Pike County WSA City of Zebulon City of Molena City of Concord City of Williamson City of Meansville Private Other	The manager of the asset.
notes	Notes	TEXT (2000)					
symbolrotation	Symbol Rotation	SHORT		Symbol_Rotation			Valid rotation values
lastmaint	Last Maintenance	DATE					

Name	Alias	Type	Default Value	Domain	Domain Value Codes	Domain Value Names	Domain Descriptions
lifecyclestatus	Lifecycle Status	SHORT	8	Lifecycle_Status	0 1 2 4 8 16 32 64 128 256	Unknown Proposed Approved Under Construction In Service To Be Retired Abandoned Retired Removed Out of Service	Valid lifecycle states for the assets.
bondedinsulated	Bonded/Insulated	SHORT		Bonded_Insulated	1 2	Bonded Insulated	Values to indicate if a feature is bonded or insulated
cptraceability	Cathodic Protection Traceability	SHORT	0	Yes_No	0 1 2	Unknown Yes No	Valid Yes, No values
inservicedate	In-Service Date	DATE					
retireddate	Retired Date	DATE					
spatialsource	Spatial Source	SHORT	0	Spatial_Source	0 1 2 3 4 5	Unknown As-Built CAD Digitized GPS/GNSS Field Sketch	Source of the data
spatialconfidence	Spatial Confidence	SHORT	0	Spatial_Confidence	0 1 2 3	Unknown High Medium Low	Confidence values for the data
cpoverride	Cathodic Protection Override	SHORT		CP_Traceability	1 2	Traceable Not Traceable	Valid cathodic protection status values

Backflow Prevention Devices: The Backflow asset group in the WaterAssembly feature class represents collections of devices, junctions and lines that prevent back flow.

Name	Alias	Type	Default Value	Domain	Domain Value Codes	Domain Value Names	Domain Descriptions
objectid	Object ID	OID					
assetgroup	Asset group	LONG					
assettype	Asset type	SHORT	0	Asset_Type_Water_Assembly_Backflow	0 1 2 3 4	Unknown Double Check Detector Double Check Valve Reduced Pressure Detector Reduced Pressure Zone	
associationstatus	Association status	SHORT	0	Water_6_Association Status	0 1 2 4 5 6 8 9 12 13 16 17 18 24 25 32 36 40 44 48 56	None Container Structure Content Content and Container Content and Structure Attachment Attachment and Container Attachment and Content Attachment and Content and Container Visible Content Visible Content and Container Visible Content and Structure Visible Content and Attachment Visible Content and Attachment and Container Connectivity Connectivity and Content Connectivity and Attachment Connectivity and Attachment and Content Connectivity and Visible Content Connectivity and Visible Content and Attachment	Indicates how the feature participates in associations.
creationdate	Creation date	DATE					
creator	Creator	TEXT (255)					
lastupdate	Last update	DATE					
updatedby	Updated by	TEXT (255)					
shape	Shape	GEOMETRY					
globalid	Global ID	GUID					
cpsubnetworkname	CP Subnetwork Name	TEXT (2000)	Unknown				
systemsubnetworkname	System Subnetwork Name	TEXT (2000)	Unknown				
pressuresubnetworkname	Pressure Subnetwork Name	TEXT (2000)	Unknown				
isolationsubnetworkname	Isolation Subnetwork Name	TEXT (2000)	Unknown				
dmasubnetworkname	DMA Subnetwork Name	TEXT (2000)	Unknown				
installdate	Install Date	DATE					
assetid	Asset ID	TEXT (64)					
notes	Notes	TEXT (2000)					
locked	Locked	SHORT	0	Yes_No	0 1 2	Unknown Yes No	Valid Yes, No values
symbolrotation	Symbol Rotation	SHORT	0	Symbol_Rotation			Valid rotation values
lifecyclestatus	Lifecycle Status	SHORT	8	Lifecycle_Status	0 1 2 4 8 16 32 64 128 256	Unknown Proposed Approved Under Construction In Service To Be Retired Abandoned Retired Removed Out of Service	Valid lifecycle states for the assets.
inservicedate	In-Service Date	DATE					
retireddate	Retired Date	DATE					
spatialsource	Spatial Source	SHORT	0	Spatial_Source	0 1 2 3 4 5	Unknown As-Built CAD Digitized GPS/GNSS Field Sketch	Source of the data
spatialconfidence	Spatial Confidence	SHORT	0	Spatial_Confidence	0 1 2 3	Unknown High Medium Low	Confidence values for the data

Pike County Water Resources Management Plan

Wastewater System
Data Dictionary

Introduction

This data dictionary is based off the Sewer Utility Network Foundation solution from Esri.

The Sewer Utility Network Foundation includes a data model that configures ArcGIS Enterprise and the ArcGIS Utility Network to represent wastewater collection networks. It deploys foundational services, simplifying the creation of additional web and

More information can be found at: https://doc.arcgis.com/en/arcgis-solutions/latest/reference/introduction-to-sewer-utility-

The data dictionary includes a description of the elements in the Sewer Utility Network Foundation. It will help you understand what elements are used to create the utility network and provide a description of what they are.

A key note of the GIS structure in this template is the streamlining of feature classes. Instead of a feature class for each feature type (manholes, lift stations, cleanouts, mains, laterals, etc.), this model uses fewer feature classes, and employs an "asset group" field to differentiate assets. For example, the "Sewer Device" feature class includes manholes, valves, pumps, and many more sub groups.

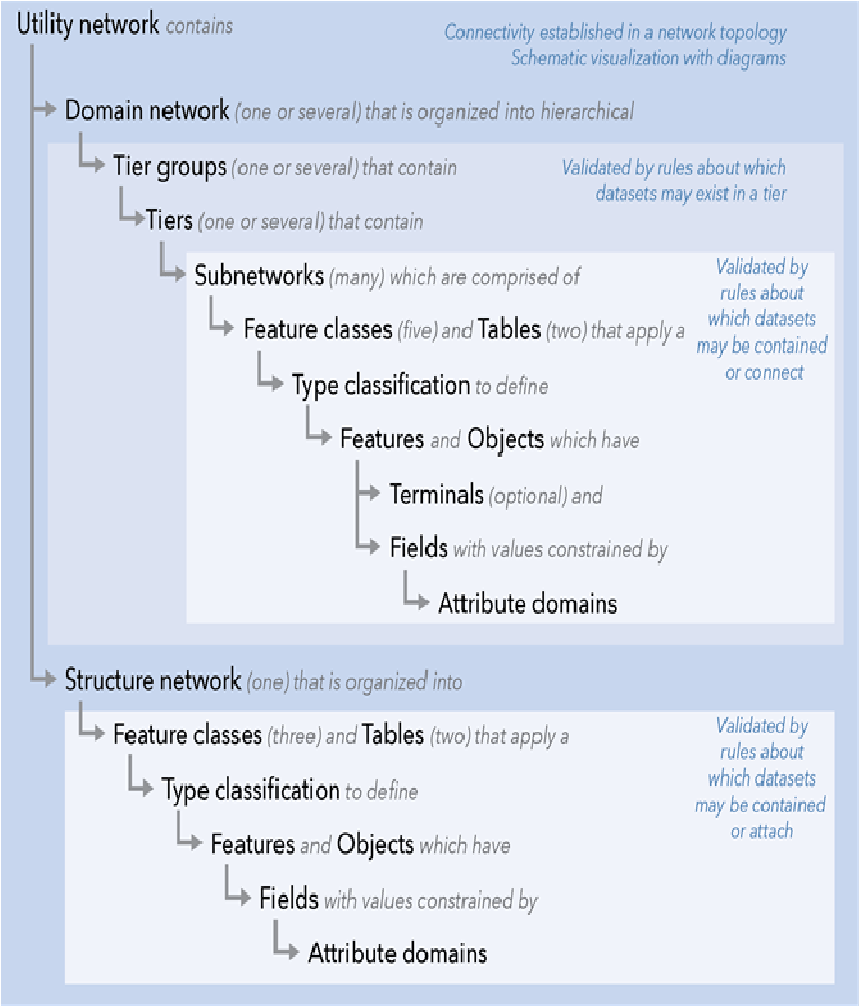

Wastewater Treatment Facilities: The Treatement asset group in the SewerDevice feature class represents the treatment plant as a point.

Name	Alias	Type	Default Value	Domain	Domain Value Code	Domain Value Names	Domain Descriptions
objectid	Object ID	OID					
assetgroup	Asset group	LONG					
assettype	Asset type	SHORT	0	Asset_Type_Sewer_Device_Discharge	0 201	Unknown Treatment Plant	The asset type for the sewer device's asset group treatment.
associationstatus	Association status	SHORT	0	Sewer_6_AssociationStatus	0 1 2 4 5 6 8 9 12 13 16 17 18 24 25 32 36 40 44 48 56	None Container Structure Content Content and Container Content and Structure Attachment Attachment and Container Attachment and Content Attachment and Content and Container Visible Content Visible Content and Container Visible Content and Structure Visible Content and Attachment Visible Content and Attachment and Container Connectivity Connectivity and Content Connectivity and Attachment Connectivity and Attachment and Content Connectivity and Visible Content Connectivity and Visible Content and Attachment	Indicates how the feature participates in associations.
issubnetworkcontroller	Is subnetwork controller	SHORT	0	Sewer_6_IsSubnetworkController	0 1	False True	Indicates if a device feature is a subnetwork controller.
isconnected	Is connected	SHORT	2	Sewer_6_IsConnected	0 1 2	False True Unknown	Indicates if the feature is connected to a subnetwork controller.
subnetworkcontrollername	Subnetwork controller name	TEXT (2000)	Unknown				
tiername	Tier name	LONG	0	Sewer_6_TierName	0 1 2 3	Unknown Cathodic Protection Collection System Sewershed	The tier names in the utility network.
tierrank	Tier rank	LONG	0				
terminalconfiguration	Terminal path	TEXT (128)	Default				
creationdate	Creation date	DATE					
creator	Creator	TEXT (255)					
lastupdate	Last update	DATE					
updatedby	Updated by	TEXT (255)					
shape	Shape	GEOMETRY					
globalid	Global ID	GUID					
cpsubnetworkname	cpsubnetworkname	TEXT (2000)	Unknown				
systemsubnetworkname	systemsubnetworkname	TEXT (2000)	Unknown				
sewershedsubnetworkname	sewershedsubnetworkname	TEXT (2000)	Unknown				
presentstatus	Present Status	SHORT	3	Pipeline_Device_Status	2 3	Inactive Active	The status of a device
activevol	Activate Volume	SHORT	0	Rainfall_Intensity	0 1 2 3 4 5 6 7 8 9	Unknown Dry Light Rain I Light Rain II Moderate Rain I Moderate Rain II Heavy Rain I Heavy Rain II Violent Rain I Violent Rain II	The current/activate value of a stormwater or sewer device.
currentvol	Current Volume	SHORT	0	Rainfall_Intensity	0 1 2 3 4 5 6 7 8 9	Unknown Dry Light Rain I Light Rain II Moderate Rain I Moderate Rain II Heavy Rain I Heavy Rain II Violent Rain I Violent Rain II	The current/activate value of a stormwater or sewer device.
designtype	Pump Type, Valve Type	SHORT					
diameter	Inlet Diameter	DOUBLE					
secondarydiameter	Discharge Diameter	DOUBLE					
designinfo	Rated Flow	DOUBLE					
pressure	Rated Pressure	DOUBLE					
normalstatus	Normal Status	SHORT	3	Pipe_Device_Status_Combined	0 1 2 3	Closed Open Inactive Active	The status or state of a device.
additionaldetails	Clockwise to Close	SHORT					
operable	Operable	SHORT					
name	Name	TEXT (64)					
lifecyclestatus	Life Cycle Status	SHORT	8	Lifecycle_Status	0 1 2 4 8 16 32 64 128 256	Unknown Proposed Approved Under Construction In Service To Be Retired Abandoned Retired Removed Out of Service	Valid lifecycle states for the assets.
installdate	Install Date	DATE					
assetid	Asset ID	TEXT (64)					
ownedby	Owned By	SHORT	1	Sewer_Asset_Owner	1 2 3 4 5 6 7 100	Pike County WSA City of Zebulon City of Molena City of Concord City of Williamson City of Meansville Private Other	The owner of the asset.
maintby	Maintained By	SHORT	1	Sewer_Asset_Manager	1 2 3 4 5 6 7 100	Pike County WSA City of Zebulon City of Molena City of Concord City of Williamson City of Meansville Private Other	The manager of the asset.
additionaldevice	Has Bypass Valve	SHORT					
symbolrotation	Symbol Rotation	SHORT	0	Sewer_Symbol_Rotation			The rotation of an asset's symbol
notes	Notes	TEXT (2000)					
accountid	Account ID	TEXT (50)					
material	Cleanout Material	SHORT					

spatialsource	Spatial Source	SHORT	0	Spatial_Source	0 1 2 3 4 5	Unknown As-Built CAD Digitized GPS/GNSS Field Sketch	Source of the data
spatialconfidence	Spatial Confidence	SHORT	0	Spatial_Confidence	0 1 2 3	Unknown High Medium Low	Confidence values for the data
cptraceability	Cathodic Protection Traceability	SHORT	0	Yes_No	0 1 2	Unknown Yes No	Valid Yes, No values
cpoverride	Cathodic Protection Override	SHORT		CP_Traceability	1 2	Traceable Not Traceable	Valid cathodic protection status values

Septic Systems: The Septic Systems asset group includes decentralized wastewater treatment systems as a point layer.

Name	Alias	Type	Default Value	Domain	Domain Value Code	Domain Value Names	Domain Descriptions
objectid	Object ID	OID					
assetgroup	Asset group	LONG					
assettype	Asset type	SHORT	1		1 2 3 4 5 6 7 8 9 10	Conventional Septic System Chamber System Drip Distribution System Aerobic Treatment Unit Mound Systems Recirculating Sand Filter System Evapotranspiration System Constructed Wetland System Cluster / Community System Low Pressure Step	
parcel_ID	Parcel	SHORT					
addr_type	Address Type	SHORT		Septic_Address_Type	1 2 100	Residential Commercial Other	
zip_code	Zip Code	STRING					
acreage	Acreage	DOUBLE					
soil	Soil Group	SHORT		Septic_Soil_Group	1 2 3 4	Group I – Sandy Textured Soils Group II – Coarse Loamy Textured Soils Group III- Fine Loamy Textured Soils Group IV – Clayey Textured Soils	
installdate	Install Date	DATE					
sys_permit_appl	Permit Application Date	DATE					
sys_appl_number	System Application Number	SHORT					
sys_permit_issu	System Permit Issued	DATE					
rep_permit_apl	Repair Permit Application Date	DATE					
rep_appl_number	Repair Permit Application Number	SHORT					
rep_permit_issu	Repair Permit Issued	DATE					
inspection	Date of Last Inspection	DATE					
pump	Date of Last Pump	DATE					
lastupdate	Last update	DATE					
updatedby	Updated by	TEXT (255)					
designinfo	Rated Flow	DOUBLE					
operable	Operable	SHORT			0 1 2	Unknown Yes No	
lifecyclestatus	Life Cycle Status	SHORT		Lifecycle_Status	0 1 2 4 8 16 32 64 128 256	Unknown Proposed Approved Under Construction In Service To Be Retired Abandoned Retired Removed Out of Service	
notes	Notes	TEXT (2000)					

Note that Septic Systems are not a part of the Sewer Utility Network Foundation. These attributes are recommended based on a review of septic system literature and existing septic system feature layers on ArcGIS Online.

Pump (Lift) Stations: The Sewer Pump asset group in the SewerDevice feature class represents the pumps that convey wastewater from a lower elevation to a higher elevation.

Name	Alias	Type	Default Value	Domain	Domain Value Code	Domain Value Names	Domain Descriptions
objectid	Object ID	OID					
assetgroup	Asset group	LONG					
assettype	Asset type	SHORT	0	Asset_Type_Sewer_Device_Discharge	0 61 62	Unknown Pump Pump with Grinder	The asset type for the sewer device's asset group pump.
associationstatus	Association status	SHORT	0	Sewer_6_AssociationStatus	0 1 2 4 5 6 8 9 12 13 16 17 18 24 25 32 36 40 44 48 56	None Container Structure Content Content and Container Content and Structure Attachment Attachment and Container Attachment and Content Attachment and Content and Container Visible Content Visible Content and Container Visible Content and Structure Visible Content and Attachment Visible Content and Attachment and Container Connectivity Connectivity and Content Connectivity and Attachment Connectivity and Attachment and Content Connectivity and Visible Content Connectivity and Visible Content and Attachment	Indicates how the feature participates in associations.
issubnetworkcontroller	Is subnetwork controller	SHORT	0	Sewer_6_IsSubnetworkController	0 1	False True	Indicates if a device feature is a subnetwork controller.
isconnected	Is connected	SHORT	2	Sewer_6_IsConnected	0 1 2	False True Unknown	Indicates if the feature is connected to a subnetwork controller.
subnetworkcontrollername	Subnetwork controller name	TEXT (2000)	Unknown				
tiername	Tier name	LONG	0	Sewer_6_TierName	0 1 2 3	Unknown Cathodic Protection Collection System Sewershed	The tier names in the utility network.
tierrank	Tier rank	LONG	0				
terminalconfiguration	Terminal path	TEXT (128)	Default				
creationdate	Creation date	DATE					
creator	Creator	TEXT (255)					
lastupdate	Last update	DATE					
updatedby	Updated by	TEXT (255)					
shape	Shape	GEOMETRY					
globalid	Global ID	GUID					
cpsubnetworkname	cpsubnetworkname	TEXT (2000)	Unknown				
systemsubnetworkname	systemsubnetworkname	TEXT (2000)	Unknown				
sewershedsubnetworkname	sewershedsubnetworkname	TEXT (2000)	Unknown				
presentstatus	Present Status	SHORT	3	Pipeline_Device_Status	2 3	Inactive Active	The status of a device
activevol	Activate Volume	SHORT	0	Rainfall_Intensity	0 1 2 3 4 5 6 7 8 9	Unknown Dry Light Rain I Light Rain II Moderate Rain I Moderate Rain II Heavy Rain I Heavy Rain II Violent Rain I Violent Rain II	The current/activate value of a stormwater or sewer device.
currentvol	Current Volume	SHORT	0	Rainfall_Intensity	0 1 2 3 4 5 6 7 8 9	Unknown Dry Light Rain I Light Rain II Moderate Rain I Moderate Rain II Heavy Rain I Heavy Rain II Violent Rain I Violent Rain II	The current/activate value of a stormwater or sewer device.
designtype	Pump Type, Valve Type	SHORT					
diameter	Inlet Diameter	DOUBLE					
secondarydiameter	Discharge Diameter	DOUBLE					
designinfo	Rated Flow	DOUBLE					
pressure	Rated Pressure	DOUBLE					
normalstatus	Normal Status	SHORT	3	Pipe_Device_Status_Combined	0 1 2 3	Closed Open Inactive Active	The status or state of a device.
additionaldetails	Clockwise to Close	SHORT					
operable	Operable	SHORT					
name	Name	TEXT (64)					
lifecyclestatus	Life Cycle Status	SHORT	8	Lifecycle_Status	0 1 2 4 8 16 32 64 128 256	Unknown Proposed Approved Under Construction In Service To Be Retired Abandoned Retired Removed Out of Service	Valid lifecycle states for the assets.
installdate	Install Date	DATE					
assetid	Asset ID	TEXT (64)					
ownedby	Owned By	SHORT	1	Sewer_Asset_Owner	1 2 3 4 5 6 7 100	Pike County WSA City of Zebulon City of Molena City of Concord City of Williamson City of Meansville Private Other	The owner of the asset.
maintby	Maintained By	SHORT	1	Sewer_Asset_Manager	1 2 3 4 5 6 7 100	Pike County WSA City of Zebulon City of Molena City of Concord City of Williamson City of Meansville Private Other	The manager of the asset.
additionaldevice	Has Bypass Valve	SHORT					
symbolrotation	Symbol Rotation	SHORT	0	Sewer_Symbol_Rotation			The rotation of an asset's symbol
notes	Notes	TEXT (2000)					
accountid	Account ID	TEXT (50)					
material	Cleanout Material	SHORT					

spatialsource	Spatial Source	SHORT	0	Spatial_Source	0 1 2 3 4 5	Unknown As-Built CAD Digitized GPS/GNSS Field Sketch	Source of the data
spatialconfidence	Spatial Confidence	SHORT	0	Spatial_Confidence	0 1 2 3	Unknown High Medium Low	Confidence values for the data
cptraceability	Cathodic Protection Traceability	SHORT	0	Yes_No	0 1 2	Unknown Yes No	Valid Yes, No values
cpoverride	Cathodic Protection Override	SHORT		CP_Traceability	1 2	Traceable Not Traceable	Valid cathodic protection status values

Manholes: The Sewer Storm Access Point asset group in the StructureJunction feature class represents features that provide access to devices or lines that convey wastewater.

Name	Alias	Type	Default Value	Domain	Domain Value Code	Domain Value Names	Domain Descriptions
objectid	Object ID	OID					
assetgroup	Asset group	LONG					
assettype	Asset type	SHORT	0	Asset_Type_Structure_Junction_Sewer_Storm_Access_Point	0 41 42 43 44 45 46 47	Unknown Lamp Hole Cover Manhole Cover Opening Door Grate Hand Hole Lid	The asset type for the structure junction's asset group sewer storm access point.
associationstatus	Association status	SHORT	0	Sewer_6_AssociationStatus	0 1 2 4 5 6 8 9 12 13 16 17 18 24 25 32 36 40 44 48 56	None Container Structure Content Content and Container Content and Structure Attachment Attachment and Container Attachment and Content Attachment and Content and Container Visible Content Visible Content and Container Visible Content and Structure Visible Content and Attachment Visible Content and Attachment and Container Connectivity Connectivity and Content Connectivity and Attachment Connectivity and Attachment and Content Connectivity and Visible Content Connectivity and Visible Content and Attachment	Indicates how the feature participates in associations.
subnetworkname	Subnetwork name	TEXT (2000)	Unknown				
creationdate	Creation date	DATE					
creator	Creator	TEXT (255)					
lastupdate	Last update	DATE					
updatedby	Updated by	TEXT (255)					
shape	Shape	GEOMETRY					
globalid	Global ID	GUID					
conetype	Cone Type	SHORT					
location	Manhole Location	SHORT					
surface	Manhole Surface Type	SHORT					
covershape	Cover Shape	SHORT	0	Structure_Sewer_Storm_Access_Point_Cover_Shape	0 1 2 3 4 5 6 7 8 9	Unknown Circular Horseshoe Oblong Rectangular Trapezoidal Triangular Arched (with flat bottom) Square U-Shaped with Flat Top	
channel	Channel	SHORT					
bench	Bench	SHORT					
material	Frame Material	SHORT					
secondarymaterial	Wall Material	SHORT					
numsteps	Number of Steps	SHORT					
stepmaterial	Step Material	SHORT					
lifecyclestatus	Life Cycle Status	SHORT	8	Lifecycle_Status	0 1 2 4 8 16 32 64 128 256	Unknown Proposed Approved Under Construction In Service To Be Retired Abandoned Retired Removed Out of Service	Valid lifecycle states for the assets.
ownedby	Owned By	SHORT	1	Sewer_Asset_Owner	1 2 3 4 5 6 7 100	Pike County WSA City of Zebulon City of Molena City of Concord City of Williamson City of Meansville Private Other	The owner of the asset.
maintby	Maintained By	SHORT	1	Sewer_Asset_Manager	1 2 3 4 5 6 7 100	Pike County WSA City of Zebulon City of Molena City of Concord City of Williamson City of Meansville Private Other	The manager of the asset.
symbolrotation	Symbol Rotation	SHORT	0	Sewer_Symbol_Rotation			The rotation of an asset's symbol
installdate	Install Date	DATE					
assetid	Asset ID	TEXT (64)					
rimelev	Rim Elevation	DOUBLE					
invertelev	Invert Elevation	DOUBLE					
depth	Depth	DOUBLE					
highpipeelev	High Pipe Elevation	DOUBLE					
spatialsource	Spatial Source	SHORT	0	Spatial_Source	0 1 2 3 4 5	Unknown As-Built CAD Digitized GPS/GNSS Field Sketch	Source of the data
spatialconfidence	Spatial Confidence	SHORT	0	Spatial_Confidence	0 1 2 3	Unknown High Medium Low	Confidence values for the data
notes	Notes	TEXT (2000)					

Gravity Mains: The Sewer Gravity Main asset group in the SewerLine feature class represents pipes using gravity to collect and transport wastewater.

Name	Alias	Type	Default Value	Domain	Domain Value Code	Domain Value Names	Domain Descriptions
objectid	Object ID	OID					
assetgroup	Asset group	LONG					
assettype	Asset type	SHORT	0	Asset_Type_Sewer_Line_Sewer_Gravity_Main	0 1 2	Unknown Collector Gravity Main Interceptor Gravity Main	
associationstatus	Association status	SHORT	0	Sewer_6_Association Status	0 1 2 4 5 6 8 9 12 13 16 17 18 24 25 32 36 40 44 48 56	None Container Structure Content Content and Container Content and Structure Attachment Attachment and Container Attachment and Content Attachment and Content and Container Visible Content Visible Content and Container Visible Content and Structure Visible Content and Attachment Visible Content and Attachment and Container Connectivity Connectivity and Content Connectivity and Attachment Connectivity and Attachment and Content Connectivity and Visible Content Connectivity and Visible Content and Attachment	Indicates how the feature participates in associations.
isconnected	Is connected	SHORT	2	Sewer_6_IsConnected	0 1 2	False True Unknown	Indicates if the feature is connected to a subnetwork controller.
fromdeviceterminal	From device terminal	SHORT	0	Sewer_6_TerminalNames	0 1 2 3 4 5 6 7 8 9 10 11 12 13 14 15 16 17	None Single Terminal High Pressure In Low Pressure Out Low Pressure In High Pressure Out Inlet Port Outlet Port Port One Port Two Terminal One Terminal Two Terminal Three Terminal Four Terminal Five Terminal Six Terminal Seven Terminal Eight	The terminal names in the utility network.
todeviceterminal	To device terminal	SHORT	0	Sewer_6_TerminalNames	0 1 2 3 4 5 6 7 8 9 10 11 12 13 14 15 16 17	None Single Terminal High Pressure In Low Pressure Out Low Pressure In High Pressure Out Inlet Port Outlet Port Port One Port Two Terminal One Terminal Two Terminal Three Terminal Four Terminal Five Terminal Six Terminal Seven Terminal Eight	The terminal names in the utility network.
creationdate	Creation date	DATE					
creator	Creator	TEXT (255)					
lastupdate	Last update	DATE					
updatedby	Updated by	TEXT (255)					
shape	Shape	GEOMETRY					
globalid	Global ID	GUID					
cpsubnetworkname	cpsubnetworkname	TEXT (2000)	Unknown				
systemsubnetworkname	systemsubnetworkname	TEXT (2000)	Unknown				
sewershedsubnetworkname	sewershedsubnetworkname	TEXT (2000)	Unknown				
diameter	Diameter	DOUBLE	0	Sewer_Main_Diameter	0 0.5 0.75 1 1.25 1.5 2 2.5 3 4 6 8 10 12 14 15 16 18 20 24 30 36 40 42 48 54 60 66 72	Unknown 1/2" 3/4" 1" 1 1/4" 1 1/2" 2" 2 1/2" 3" 4" 6" 8" 10" 12" 14" 15" 16" 18" 20" 24" 30" 36" 40" 42" 48" 54" 60" 66" 72"	The diameter of sewer interceptor mains.
designtype	Main Shape	SHORT	0	Sewer_Main_Shape	0 1 2 3 4 5 6	Unknown Circular Horseshoe Oblong Rectangular Trapezoidal Triangular	The shape of sewer collector mains.
linertype	Liner Type	SHORT	0	Sewer_Main_Liner	0 1 2 3 4 5 6 7 8 9 10 11 12 100	Unknown Cured-In-Place Pipe - CIP Fold and Form or Deform/Reform - FF Formed-In-Place Liner - FP Grout-In-Place Liner - GP Glass Reinforced Cement - GRC None - N Continuous Slip Liner - SC Sectional Slip Liner - SE Spray Liner - SL Segmented Panel - SN Segmented Pipe - SP Spiral Wound - SW Other - ZZ	The lining method of sewer collector mains.
downelev	Downstream Elevation	DOUBLE					

upelev	Upstream Elevation	DOUBLE					
slope	Slope	DOUBLE					
lifecyclestatus	Life Cycle Status	SHORT	8	Lifecycle_Status	0 1 2 4 8 16 32 64 128 256	Unknown Proposed Approved Under Construction In Service To Be Retired Abandoned Retired Removed Out of Service	Valid lifecycle states for the assets.
installdate	Install Date	DATE					
assetid	Asset ID	TEXT (64)					
ownedby	Owned By	SHORT	1	Sewer_Asset_Owner	1 2 3 4 5 6 7 100	Pike County WSA City of Zebulon City of Molena City of Concord City of Williamson City of Meansville Private Other	The owner of the asset.
maintby	Maintained By	SHORT	1	Sewer_Asset_Manager	1 2 3 4 5 6 7 100	Pike County WSA City of Zebulon City of Molena City of Concord City of Williamson City of Meansville Private Other	The manager of the asset.
tracerwire	Tracer Wire	SHORT	0	Yes_No	0 1 2	Unknown Yes No	Valid Yes, No values
measuredlength	Measured Length	DOUBLE					
notes	Notes	TEXT (2000)					
spatialsource	Spatial Source	SHORT	0	Spatial_Source	0 1 2 3 4 5	Unknown As-Built CAD Digitized GPS/GNSS Field Sketch	Source of the data
spatialconfidence	Spatial Confidence	SHORT	0	Spatial_Confidence	0 1 2 3	Unknown High Medium Low	Confidence values for the data
cptraceability	Cathodic Protection Traceability	SHORT	0	Yes_No	0 1 2	Unknown Yes No	Valid Yes, No values
cpoverride	Cathodic Protection Override	SHORT		CP_Traceability	1 2	Traceable Not Traceable	Valid cathodic protection status values
material	Material	SHORT	0	Sewer_Main_Material	0 1 2 3 4 5 6 7 8 9 10 11 12 13 14 15 16 17 18 19 20 21 22 23 24 25 26	Unknown Acrylonitrile Butadiene Styrene - ABS Asbestos Cement - AC Asphalt - ASP Brick - BR Cast Iron - CAS Clay Tile - CT Concrete Pipe (Non-Reinforced) - CP Concrete Segments (Bolted) - CSB Concrete Segments (Unbolted) - CSU Cured in Place Pipe - CIPP Ductile Iron Pipe - DIP Fiberglass Reinforced Pipe - FRP Galvanized Pipe - GP Glass Reinforced Cement - GRC High Density Polyethylene - HDPE Other - OTH Plastic/Steel Composite - PSC Polyethylene - PE Polypropylene - PP Polyvinyle Chloride - PVC Pre-Stressed Concrete Cylinder Pipe - PCCP Reinforced Concrete Pipe - RCP Reinforced Plastic Pipe (Truss Pipe) - RPM Segmented Block - SB Steel Pipe - SP Vitrified Clay Pipe - VCP	The material of sewer mains.
shape_length	shape_Length	DOUBLE					

Force Mains: The Sewer Force Main asset group in the SewerLine feature class represents pipes with a primary role lifting wastewater to a higher elevation.

Name	Alias	Type	Default Value	Domain	Domain Value Code	Domain Value Names	Domain Descriptions
objectid	Object ID	OID					
assetgroup	Asset group	LONG					
assettype	Asset type	SHORT	0	Asset_Type_Sewer_Line_Sewer_Force_Main	0 41 42	Unknown Collector Force Main Interceptor Force Main	
associationstatus	Association status	SHORT	0	Sewer_6_AssociationStatus	0 1 2 4 5 6 8 9 12 13 16 17 18 24 25 32 36 40 44 48 56	None Container Structure Content Content and Container Content and Structure Attachment Attachment and Container Attachment and Content Attachment and Content and Container Visible Content Visible Content and Container Visible Content and Structure Visible Content and Attachment Visible Content and Attachment and Container Connectivity Connectivity and Content Connectivity and Attachment Connectivity and Attachment and Content Connectivity and Visible Content Connectivity and Visible Content and Attachment	Indicates how the feature participates in associations.
isconnected	Is connected	SHORT	2	Sewer_6_IsConnected	0 1 2	False True Unknown	Indicates if the feature is connected to a subnetwork controller.
fromdeviceterminal	From device terminal	SHORT	0	Sewer_6_TerminalNames	0 1 2 3 4 5 6 7 8 9 10 11 12 13 14 15 16 17	None Single Terminal High Pressure In Low Pressure Out Low Pressure In High Pressure Out Inlet Port Outlet Port Port One Port Two Terminal One Terminal Two Terminal Three Terminal Four Terminal Five Terminal Six Terminal Seven Terminal Eight	The terminal names in the utility network.
todeviceterminal	To device terminal	SHORT	0	Sewer_6_TerminalNames	0 1 2 3 4 5 6 7 8 9 10 11 12 13 14 15 16 17	None Single Terminal High Pressure In Low Pressure Out Low Pressure In High Pressure Out Inlet Port Outlet Port Port One Port Two Terminal One Terminal Two Terminal Three Terminal Four Terminal Five Terminal Six Terminal Seven Terminal Eight	The terminal names in the utility network.
creationdate	Creation date	DATE					
creator	Creator	TEXT (255)					
lastupdate	Last update	DATE					
updatedby	Updated by	TEXT (255)					
shape	Shape	GEOMETRY					
globalid	Global ID	GUID					
cpsubnetworkname	cpsubnetworkname	TEXT (2000)	Unknown				
systemsubnetworkname	systemsubnetworkname	TEXT (2000)	Unknown				
sewershedsubnetworkname	sewershedsubnetworkname	TEXT (2000)	Unknown				
diameter	Diameter	DOUBLE	0	Sewer_Main_Diameter	0 0.5 0.75 1 1.25 1.5 2 2.5 3 4 6 8 10 12 14 15 16 18 20 24 30 36 40 42 48 54	Unknown 1/2" 3/4" 1" 1 1/4" 1 1/2" 2" 2 1/2" 3" 4" 6" 8" 10" 12" 14" 15" 16" 18" 20" 24" 30" 36" 40" 42" 48" 54"	The diameter of sewer interceptor mains.
designtype	Main Shape	SHORT	0	Sewer_Main_Shape	0 1 2 3 4 5 6	Unknown Circular Horseshoe Oblong Rectangular Trapezoidal Triangular	The shape of sewer collector mains.

linertype	Liner Type	SHORT	0	Sewer_Main_Liner	0 1 2 3 4 5 6 7 8 9 10 11 12 100	Unknown Cured-In-Place Pipe - CIP Fold and Form or Deform/Reform - FF Formed-In-Place Liner - FP Grout-In-Place Liner - GP Glass Reinforced Cement - GRC None - N Continuous Slip Liner - SC Sectional Slip Liner - SE Spray Liner - SL Segmented Panel - SN Segmented Pipe - SP Spiral Wound - SW Other - ZZ	The lining method of sewer collector mains.
downelev	Downstream Elevation	DOUBLE					
upelev	Upstream Elevation	DOUBLE					
slope	Slope	DOUBLE					
lifecyclestatus	Life Cycle Status	SHORT	8	Lifecycle_Status	0 1 2 4 8 16 32 64 128 256	Unknown Proposed Approved Under Construction In Service To Be Retired Abandoned Retired Removed Out of Service	Valid lifecycle states for the assets.
installdate	Install Date	DATE					
assetid	Asset ID	TEXT (64)					
ownedby	Owned By	SHORT	1	Sewer_Asset_Owner	1 2 3 4 5 6 7 100	Pike County WSA City of Zebulon City of Molena City of Concord City of Williamson City of Meansville Private Other	The owner of the asset.
maintby	Maintained By	SHORT	1	Sewer_Asset_Manager	1 2 3 4 5 6 7 100	Pike County WSA City of Zebulon City of Molena City of Concord City of Williamson City of Meansville Private Other	The manager of the asset.
tracerwire	Tracer Wire	SHORT	0	Yes_No	0 1 2	Unknown Yes No	Valid Yes, No values
measuredlength	Measured Length	DOUBLE					
notes	Notes	TEXT (2000)					
spatialsource	Spatial Source	SHORT	0	Spatial_Source	0 1 2 3 4 5	Unknown As-Built CAD Digitized GPS/GNSS Field Sketch	Source of the data
spatialconfidence	Spatial Confidence	SHORT	0	Spatial_Confidence	0 1 2 3	Unknown High Medium Low	Confidence values for the data
cptraceability	Cathodic Protection Traceability	SHORT	0	Yes_No	0 1 2	Unknown Yes No	Valid Yes, No values
cpoverride	Cathodic Protection Override	SHORT		CP_Traceability	1 2	Traceable Not Traceable	Valid cathodic protection status values
material	Material	SHORT	0	Sewer_Main_Material	0 1 2 3 4 5 6 7 8 9 10 11 12 13 14 15 16 17 18 19 20 21 22 23 24 25	Unknown Acrylonitrile Butadiene Styrene - ABS Asbestos Cement - AC Asphalt - ASP Brick - BR Cast Iron - CAS Clay Tile - CT Concrete Pipe (Non-Reinforced) - CP Concrete Segments (Bolted) - CSB Concrete Segments (Unbolted) - CSU Cured in Place Pipe - CIPP Ductile Iron Pipe - DIP Fiberglass Reinforced Pipe - FRP Galvanized Pipe - GP Glass Reinforced Cement - GRC High Density Polyethylene - HDPE Other - OTH Plastic/Steel Composite - PSC Polyethylene - PE Polypropylene - PP Polyvinyle Chloride - PVC Pre-Stressed Concrete Cylinder Pipe - PCCP Reinforced Concrete Pipe - RCP Reinforced Plastic Pipe (Truss Pipe) - RPM Segmented Block - SB Steel Pipe - SP	The material of sewer mains.
shape_length	shape_Length	DOUBLE					

Wastewater Treatment Discharges: The Discharge asset group in the SewerDevice feature class represents represents the locations effluent wastewater enters a body of water.

Name	Alias	Type	Default Value	Domain	Domain Value Code	Domain Value Names	Domain Descriptions
objectid	Object ID	OID					
assetgroup	Asset group	LONG					
assettype	Asset type	SHORT	0	Asset_Type_Sewer_Device_Discharge	0 221	Unknown Effluent	The Asset Types for the Sewer Device Asset Group Effluent Discharge
associationstatus	Association status	SHORT	0	Sewer_6_AssociationStatus	0 1 2 4 5 6 8 9 12 13 16 17 18 24 25 32 36 40 44 48 56	None Container Structure Content Content and Container Content and Structure Attachment Attachment and Container Attachment and Content Attachment and Content and Container Visible Content Visible Content and Container Visible Content and Structure Visible Content and Attachment Visible Content and Attachment and Container Connectivity Connectivity and Content Connectivity and Attachment Connectivity and Attachment and Content Connectivity and Visible Content Connectivity and Visible Content and Attachment	Indicates how the feature participates in associations.
issubnetworkcontroller	Is subnetwork controller	SHORT	0	Sewer_6_IsSubnetworkController	0 1	False True	Indicates if a device feature is a subnetwork controller.
isconnected	Is connected	SHORT	2	Sewer_6_IsConnected	0 1 2	False True Unknown	Indicates if the feature is connected to a subnetwork controller.
subnetworkcontrollername	Subnetwork controller name	TEXT (2000)	Unknown				
tiername	Tier name	LONG	0	Sewer_6_TierName	0 1 2 3	Unknown Cathodic Protection Collection System Sewershed	The tier names in the utility network.
tierrank	Tier rank	LONG	0				
terminalconfiguration	Terminal path	TEXT (128)	Default				
creationdate	Creation date	DATE					
creator	Creator	TEXT (255)					
lastupdate	Last update	DATE					
updatedby	Updated by	TEXT (255)					
shape	Shape	GEOMETRY					
globalid	Global ID	GUID					
cpsubnetworkname	cpsubnetworkname	TEXT (2000)	Unknown				
systemsubnetworkname	systemsubnetworkname	TEXT (2000)	Unknown				
sewershedsubnetworkname	sewershedsubnetworkname	TEXT (2000)	Unknown				
presentstatus	Present Status	SHORT	3	Pipeline_Device_Status	2 3	Inactive Active	The status of a device
activevol	Activate Volume	SHORT	0	Rainfall_Intensity	0 1 2 3 4 5 6 7 8 9	Unknown Dry Light Rain I Light Rain II Moderate Rain I Moderate Rain II Heavy Rain I Heavy Rain II Violent Rain I Violent Rain II	The current/activate value of a stormwater or sewer device.
currentvol	Current Volume	SHORT	0	Rainfall_Intensity	0 1 2 3 4 5 6 7 8 9	Unknown Dry Light Rain I Light Rain II Moderate Rain I Moderate Rain II Heavy Rain I Heavy Rain II Violent Rain I Violent Rain II	The current/activate value of a stormwater or sewer device.
designtype	Pump Type, Valve Type	SHORT					
diameter	Inlet Diameter	DOUBLE					
secondarydiameter	Discharge Diameter	DOUBLE					
designinfo	Rated Flow	DOUBLE					
pressure	Rated Pressure	DOUBLE					
normalstatus	Normal Status	SHORT	3	Pipe_Device_Status_Combined	0 1 2 3	Closed Open Inactive Active	The status or state of a device.
additionaldetails	Clockwise to Close	SHORT					
operable	Operable	SHORT					
name	Name	TEXT (64)					
lifecyclestatus	Life Cycle Status	SHORT	8	Lifecycle_Status	0 1 2 4 8 16 32 64 128 256	Unknown Proposed Approved Under Construction In Service To Be Retired Abandoned Retired Removed Out of Service	Valid lifecycle states for the assets.
installdate	Install Date	DATE					
assetid	Asset ID	TEXT (64)					
ownedby	Owned By	SHORT	1	Sewer_Asset_Owner	1 2 3 4 5 6 7 100	Pike County WSA City of Zebulon City of Molena City of Concord City of Williamson City of Meansville Private Other	The owner of the asset.
maintby	Maintained By	SHORT	1	Sewer_Asset_Manager	1 2 3 4 5 6 7 100	Pike County WSA City of Zebulon City of Molena City of Concord City of Williamson City of Meansville Private Other	The manager of the asset.
additionaldevice	Has Bypass Valve	SHORT					
symbolrotation	Symbol Rotation	SHORT	0	Sewer_Symbol_Rotation			The rotation of an asset's symbol
notes	Notes	TEXT (2000)					
accountid	Account ID	TEXT (50)					
material	Cleanout Material	SHORT					

spatialsource	Spatial Source	SHORT	0	Spatial_Source	0 1 2 3 4 5	Unknown As-Built CAD Digitized GPS/GNSS Field Sketch	Source of the data
spatialconfidence	Spatial Confidence	SHORT	0	Spatial_Confidence	0 1 2 3	Unknown High Medium Low	Confidence values for the data
cptraceability	Cathodic Protection Traceability	SHORT	0	Yes_No	0 1 2	Unknown Yes No	Valid Yes, No values
cpoverride	Cathodic Protection Override	SHORT		CP_Traceability	1 2	Traceable Not Traceable	Valid cathodic protection status values

APPENDIX C

ISO TRAINING CALCULATOR

Training	Standard	Traning Hours	Frequency	Position	Number of Postions	Total Training Per Position	2016 Score	Max Potential	Available
A - Facilities and Use	NFPA 1001	18	Annual	Firefighter	1	18	0.00	35	35
B - Company Training	NFPA 1001	16	Monthly	Firefighter	1	192	3.13	25	25
C- Classes for Officers	NFPA 1021	12	Annual	Officer	1	12	4.40	12	12
D - New Dirver and Operator Training	NFPA 1002 and 1451	60	Once	Driver/Operator	1	60	1.33	0	5
E - Existing Driver and Operator Traning	NFPA 1002 and 1451	12	Annual	Driver/Operator	1	12	5.00	5	5
F- Training on Hazardous Materials	NFPA 472	6	Once	Firefighter	1	6	0.00	1	1
G- Recruit Training	NFPA 1001	240	Once	Firefighter	1	240	1.25	0	5
H - Pre-Fire Planning Inspections	Not Clear	TBD	Annual	Company Members	1	TBD	0.00	0	12
Total							**15.11**	**78**	**100**
Existing ISO score							**1.36**		**9.00**
Potential ISO score								**7.02**	**9.00**

Frequency	(Multiple Items)

Row Labels	**Positions**
Driver/Operator	12
Firefighter	210
Officer	12
Grand Total	**234**

APPENDIX D

CONSTRUCTION & INSPECTION REQUIREMENT EXAMPLES

Clayton County Water Authority

Carroll County Water Authority

CLAYTON COUNTY Water AUTHORITY

1600 Battle Creek Road, Morrow, Georgia 30260

STANDARD SPECIFICATIONS FOR WATER DISTRIBUTION SYSTEMS AND SANITARY SEWER SYSTEMS

3rd Edition

Program Management and Engineering
Office: (770) 961-2130
Fax: (770) 960-5229

Date: 02 October 2, 2019

TABLE OF CONTENTS

DIVISION I POLICIES AND PROCEDURES

SECTION 1 SCOPE AND INTENT I-1.1
1.01 Purpose I-1.1
1.02 Delegation I-1.1
1.03 Variance I-1.2
1.04 Amendments to the Specifications I-1.2
SECTION 2 DEFINITIONS I-2.1
SECTION 3 DESIGN APPROVAL I-3.1
3.01 General I-3.1
3.02 Technical Review I-3.1
3.03 Plan Processing I-3.2
3.04 Approval by Regulatory Agencies I-3.3
3.05 Period of Plan Approval I-3.4
SECTION 4 EASEMENTS AND DEEDED PROPERTY I-4.1
4.01 General I-4.1
4.02 On-Site Easement I-4.1
4.03 Off-Site Easement I-4.2
4.04 Easement Size I-4.2
4.05 Deeded Property I-4.2
SECTION 5 INSTALLATION I-5.1
5.01 General I-5.1
5.02 Utility Contractor I-5.1
5.03 CCWA Installation I-5.1
5.04 Insurance Requirements I-5.2
5.05 Inspection I-5.2
5.06 Testing I-5.3
SECTION 6 CONNECTING TO CCWA SYSTEMS I-6.1
6.01 General I-6.1
6.02 Connection to Existing Systems I-6.1
SECTION 7 SYSTEM ACCEPTANCE I-7.1
7.01 General I-7.1
7.02 Final Inspection I-7.1
7.03 Warranty I-7.1
7.04 Final Acceptance I-7.1

TABLE OF CONTENTS

DIVISION II DESIGN REQUIREMENTS

SECTION 1 DESIGN AND PLAN PREPARATION II-1.1

1.01 General II-1.1
1.02 Licensed Professionals II-1.1
1.03 Reference Documents and Standards II-1.2
1.04 Plan Requirements II-1.4
1.05 Modifications to Plans II-1.4
1.06 As-Built Drawings II-1.5

SECTION 2 WATER DISTRIBUTION II-2.1

2.01 General II-2.1
2.02 Design Usage Rates and Hydraulics II-2.1
2.03 Water Line Material and Size II-2.2
2.04 Water Line Location II-2.2
2.05 Fire Hydrant Location and Spacing II-2.3
2.06 Valve Size and Location II-2.4
2.07 Water Line Depth II-2.5
2.08 Thrust Restraint II-2.6
2.09 Water Meters and Backflow Prevention II-2.6

SECTION 3 GRAVITY FLOW SEWERS II-3.1

3.01 General II-3.1
3.02 Design Flow Rates II-3.1
3.03 Hydraulics II-3.2
3.04 Sewer Material and Size II-3.3
3.05 Sewer Location II-3.4
3.06 Sewer Depth and Structural Integrity II-3.5
3.07 Manhole Location and Spacing II-3.6

TABLE OF CONTENTS

DIVISION II DESIGN REQUIREMENTS

SECTION 4 FORCE MAINS II-4.1
4.01 General II-4.1
4.02 Hydraulics II-4.1
4.03 Force Main Material and Size II-4.1
4.04 Force Main Location II-4.1
4.05 Force Main Depth II-4.2
4.06 Thrust Restraint II-4.3
4.07 Combination Air Vacuum/Release Valves II-4.3
SECTION 5 AERIAL PIPE II-5.1
5.01 General II-5.1
5.02 Aerial Pipe Material II-5.1
5.03 Aerial Pipe Support II-5.1
SECTION 6 LIFT STATIONS II-6.1
6.01 General II-6.1
6.02 Lift Station Package II-6.1
6.03 Backup Power System II-6.7
6.04 Telemetry II-6.13
6.05 Wet Well II-6.22
6.06 Equipment Pads II-6.23
6.07 General Electrical Requirements II-6.23
6.08 Property and Site Area II-6.25
6.09 Fence and Landscaping II-6.26

TABLE OF CONTENTS

DIVISION III MATERIAL REQUIREMENTS

SECTION 1 DUCTILE IRON PIPE AND FITTINGS III-1.1
1.01 Pipe Classification III-1.1
1.02 Fitting Classification III-1.1
1.03 Gaskets and Bolted Connections III-1.2
1.04 Coatings and Linings III-1.3
1.05 Pipe Marking III-1.4
SECTION 2 STEEL PIPE AND FITTINGS III-2.1
2.01 Pipe Classification III-2.1
2.02 Transition Coupling III-2.1
2.03 Coatings and Linings III-2.1
SECTION 3 COPPER PIPE AND FITTINGS III-3.1
3.01 Pipe Classification III-3.1
3.02 Fittings III-3.1
SECTION 4 PVC PIPE III-4.1
4.01 Casing for Copper Pipe III-4.1
4.02 Sewer Pipe Classification III-4.1
4.03 Sewer Pipe Fitting Classification III-4.1
SECTION 5 VALVES III-5.1
5.01 Gate Valve III-5.1
5.02 Butterfly Valve III-5.3
5.03 Double Check Valve III-5.5
5.04 Corporation Valve III-5.6
5.05 Curb Stop III-5.6
5.06 Plug Valve III-5.7
5.07 Combination Air/Vacuum Release Valve III-5.8
5.08 Valve Box III-5.9
SECTION 6 TAPPING SLEEVES III-6.1
6.01 Tapping Sleeve III-6.1
6.02 Tapping Saddle III-6.1

TABLE OF CONTENTS

DIVISION III MATERIAL REQUIREMENTS

SECTION 7 WATER METERS III-7.1
7.01 Residential and Light Commercial III-7.1
7.02 Commercial and Industrial III-7.3
7.03 Fire Service III-7.6
7.04 Fire/Domestic Combination Service III-7.8
7.05 Water Meter Boxes (Residential and Light Commercial) III-7.8
7.06 Water Meter Vaults (Commercial and Industrial) III-7.9
7.07 Vault Access Hatches III-7.10
SECTION 8 HYDRANTS III-8.1
8.01 Fire Hydrant III-8.1
8.02 Yard Hydrant III-8.2
SECTION 9 MANHOLES AND WET WELLS III-9.1
9.01 General III-9.1
9.02 Pre-cast III-9.1
9.03 Pre-cast “Dog House” III-9.2
9.04 Brick and Mortar III-9.2
9.05 Frames and Covers III-9.3
SECTION 10 CAST - IN - PLACE CONCRETE III-10.1
10.01 Concrete Design III-10.1
10.02 Reinforcement III-10.1
10.03 Formwork III-10.2
10.04 Curing and Sealing Compounds III-10.2
10.05 Epoxy Bonding Agent III-10.2
10.06 Acrylic Latex Bonding Agent III-10.3

TABLE OF CONTENTS

DIVISION III MATERIAL REQUIREMENTS

SECTION 11 MASONRY AND GROUT III-11.1

11.01 Mortar and Grout Materials III-11.1

11.02 Mortar and Grout Proportions III-11.1

11.03 Concrete Masonry Units III-11.2

11.04 Joint Reinforcement III-11.2

SECTION 12 ENVIRONMENTAL COATINGS III-12.1

12.01 Materials Requiring Coatings III-12.1

12.02 Coating Schedule III-12.1

12.03 Manhole and Wet Well Lining III-12.3

SECTION 13 MISCELLANEOUS MATERIALS III-13.1

13.01 Stabilization Stone III-13.1

13.02 Detectable Underground Utility Marking Tape III-13.1

13.03 Other Materials III-13.1

TABLE OF CONTENTS

DIVISION IV CONSTRUCTION STANDARDS

SECTION 1 GENERAL.....IV-1.1
1.01 Contractor License.....IV-1.1
1.02 Utility Notification.....IV-1.1
1.03 Work Commencement.....IV-1.1
1.04 Miscellaneous Standards.....IV-1.2
SECTION 2 MATERIAL DISTRIBUTION.....IV-2.1
2.01 General.....IV-2.1
2.02 Delivery.....IV-2.1
2.03 Handling.....IV-2.1
2.04 Storage.....IV-2.1
2.05 Maintenance and Protection.....IV-2.2
SECTION 3 SITE PREPARATION.....IV-3.1
3.01 Clearing and Grubbing.....IV-3.1
3.02 Topsoil Stockpiling.....IV-3.2
3.03 Removing Pavement.....IV-3.2
SECTION 4 EXCAVATION.....IV-4.1
4.01 Soil Excavation.....IV-4.1
4.02 Rock Excavation.....IV-4.1
4.03 Pipe Trench Excavation.....IV-4.2
SECTION 5 INSTALLATION.....IV-5.1
5.01 Pipe Bedding.....IV-5.1
5.02 Pipe, Fitting, Valve and Fire Hydrant Installation.....IV-5.1
5.03 Thrust Blocking.....IV-5.3
5.04 Manhole and Wet Well Installation.....IV-5.3
5.05 Meter Box and Vault Installation.....IV-5.5
5.06 Borings and Casings.....IV-5.6
5.07 Pipe and Valve Identification.....IV-5.8

TABLE OF CONTENTS

DIVISION IV CONSTRUCTION STANDARDS

SECTION 6 BACKFILL AND COMPACTION IV-6.1
6.01 Backfill IV-6.1
6.02 Compaction IV-6.1
6.03 Compaction Testing IV-6.2
SECTION 7 SITE COMPLETION IV-7.1
7.01 Grading IV-7.1
7.02 Replacing Pavement IV-7.1
SECTION 8 TESTING IV-8.1
8.01 General IV-8.1
8.02 Hydrostatic (Water Main and Force Main) IV-8.1
8.03 Air Pressure (Gravity Flow) IV-8.1
8.04 Televising (Gravity Flow) IV-8.2
8.05 Mandrel (Gravity Flow) IV-8.2
8.06 Static Water Level (Wet Well) IV-8.3
SECTION 9 DISINFECTION IV-9.1
9.01 General IV-9.1
9.02 Initial Flushing IV-9.2
9.03 Chlorination and Flushing IV-9.2
9.04 Disinfection Testing IV-9.3
SECTION 10 CONCRETE IV-10.1
10.01 Formwork IV-10.1
10.02 Steel Reinforcement IV-10.2
10.03 Placement IV-10.3
10.04 Finishing IV-10.4
10.05 Curing IV-10.4
SECTION 11 ENVIRONMENTAL COATINGS IV-11.1

TABLE OF CONTENTS

APPENDICES

Appendix – A: Georgia EPD Letters Approving Specifications
Appendix – B: Georgia EPD Letters Delegating Authority
Appendix – C: Water Distribution/Sanitary Sewer Addition Submittal
Appendix – D: Technical Review Checklist
Appendix – E: Inspection Report
Appendix – F: Testing Forms
Appendix – G: Construction Acceptance Letters
Appendix – H: Final Inspection Reports
Appendix – I: Final Acceptance Letters

LIST OF DETAILS

Detail No. 1.1: Underground Utilities Locations
Detail No. 2.1: Long Side Service
Detail No. 2.2: Pipe Detection
Detail No. 2.3: Pipe Detection
Detail No. 3.1: Typical Fire Hydrant
Detail No. 4.1: Typical Cul-de-sac Fire Hydrant
Detail No. 5.1: Fire Hydrant in Cul-de-sac
Detail No. 6.1: Valve Box
Detail No. 7.1: Pipe Depth at Edge of Pavement
Detail No. 8.1: Typical Ductile Iron Pipe Bedding
Detail No. 9.1: Thrust Block Dimensions
Detail No.10.1: Thrust Restraint at Fitting
Detail No.11.1: Water Meter Box
Detail No.12.1: 3 Inch Meter Assembly
Detail No.13.1: 3 Inch Meter Assembly Vault and Lid
Detail No.14.1: Fire Meter
Detail No.15.1: Fire Meter Vault and Lid
Detail No.16.1: Combination Meter
Detail No.17.1: Combination Meter Vault and Lid
Detail No.18.1: Typical PVC Sewer Pipe Bedding
Detail No.19.1: Lateral Connection
Detail No.20.1: Pipe Collar

TABLE OF CONTENTS

Detail No.21.1: Manhole Sections
Detail No.22.1: Combination Air or Vacuum Release Valve
Detail No.23.1: Pier Dimensions and Section
Detail No.24.1: Lift Station Pumps and Housing
Detail No.25.1: Lift Station Wet Well
Detail No.25.3: SCADA Tower
Detail No.25.5: Electrical Panel Stand
Detail No.25.7: Lift Station Site
Detail No.25.8: Lift Station Site Section
Detail No.26.1: Yard Hydrant
Detail No.27.1: Chain Link Fence
Detail No.28.1: Typical Asphalt Replacement
Detail No.29.1: Typical Asphalt to Curb Replacement

1.01 Purpose

A. The purpose of this document is to set forth the uniform policies, procedures, design requirements, material requirements and construction standards of the Clayton County Water Authority as to comply with all applicable state and federal laws for the installation of water distribution systems and sanitary sewer systems.

B. The State of Georgia, Department of Natural Resources, Environmental Protection Division, Drinking Water Permitting and Engineering Program and Engineering and Technical Support Program have approved the Clayton County Water Authority's *Standard Specifications for Water Distribution Systems and Sanitary Sewer Systems, 3rd Edition*. Copies of the approval notices are included in Appendix A.

1.02 Delegation

A. The Clayton County Water Authority shall review and approve the design and installation of water distribution systems and sanitary sewer systems that will be owned and maintained by the Clayton County Water Authority or that will discharge into said sanitary sewer system.

B. The State of Georgia, Department of Natural Resources, Environmental Protection Division, in letters dated 13 November 2000 and 15 March 2001, delegated to the Clayton County Water Authority the rights to review and approve the design and installation of additions to the existing Clayton County Water Authority water distribution system and sanitary sewer system. Copies of the letters delegating authority are included in Appendix B.

C. The delegation of review and approval to the Clayton County Water Authority is limited to the following.

1. Additions to the existing water distribution system.
2. Gravity flow sanitary sewer system additions up to 36 inches in diameter.
3. Sanitary sewer lift stations up to 700 gallons per minute flow rate.
4. Force mains up to 36 inches in diameter.

1.03 Variance

Under special conditions beyond the control of parties involved, the Clayton County Water Authority may vary from the specifications herein. The General Manager of the Clayton County Water Authority shall authorize any variance in writing. The State of Georgia, Department of Natural Resources, Environmental Protection Division, shall be notified of any variance in writing.

1.04 Amendments to the Specifications

A. The Clayton County Water Authority shall amend the *Standard Specifications for Water Distribution Systems and Sanitary Sewer Systems,* as determined necessary to improve the systems' performance and integrity. The Department Manager of Program Management and Engineering of the Clayton County Water Authority shall approve amendments in writing.

B. The Clayton County Water Authority shall amend the *Standard Specifications for Water Distribution Systems and Sanitary Sewer Systems, 3rd Edition* as required due to changes in applicable regulations. The State of Georgia, Department of Natural Resources, Environmental Protection Division, shall approve regulatory amendments in writing.

The listed words or acronyms shall mean the following:

ACI: American Concrete Institute.

ANSI: American National Standards Institute.

ASTM: American Society for Testing and Materials.

AWWA: American Water Works Association.

CCWA: Clayton County Water Authority.

CCWA Engineer: Clayton County Water Authority, Department Manager of Program Management and Engineering or authorized representative.

Clayton County T & D: Clayton County Transportation and Development Department.

CRSI: Concrete Reinforcing Steel Institute.

Design Engineer: The engineer or surveyor under whose direction the development plans submitted for review were prepared. Design Engineer shall be a Georgia Licensed Professional Engineer or Georgia Licensed Registered Land Surveyor having knowledge of water distribution system and sanitary sewer system design.

Developer: Any person, firm, corporation, association or partnership or any agent thereof who undertakes or proposes to undertake the development of land so as to constitute a residential subdivision, apartment complex, condominium or commercial/industrial/ institutional establishment.

DFT: Dry Film Thickness.

Diameter: Nominal inside diameter of pipe excluding bituminous or epoxy bonded coating thickness.

DIP: Ductile iron pipe.

Easement: Non-profitable interest in land owned by another that entitles its holder to a specific limited use.

Force Main: Piping, valves and other components of a single pressurized line used to convey raw water, potable water or sewage. A force main conveying potable water may have a limited number of service connections.

FMR: Factory Mutual Research.

Georgia EPD: State of Georgia, Department of Natural Resources, Environmental Protection Division.

GFI: Ground Fault Interrupt.

gpm: Gallons per minute.

Gravity Sewer: Piping and other components used to convey sanitary sewage in a non-pressurized system.

Lateral: Pipe extending from a sewer main to a street right-of-way or easement for the purpose of servicing a property (lot). The lateral shall be six (6) inches in diameter, shall not contain a manhole and shall be less than 250 feet in length.

Lift Station: All pumps, valves, wet wells, controls and other components used to pump sanitary sewage into a force main.

NEC: National Electrical Code, latest edition.

NEMA: National Electrical Manufacturers' Association.

No. 57 Stone: Class I embedment or backfill material consisting of manufactured aggregates (crushed stone) in accordance with ASTM D 2321-89 (Reapproved 1995) and ASTM D 2487-00. Percent passing sieve sizes are as follows: 100% passes 1-1/2", < or 10% passes No. 4 and < 5% passes No. 200.

Pavement: Any asphalt, concrete, gravel or dirt surface including curbs and sidewalks used by vehicles and/or pedestrians.

pcf: Pounds per cubic foot.

psi: Pounds per square inch.

PVC: Polyvinyl chloride.

Rock: Solid material being greater than one (1) cubic yard in size which by actual demonstration cannot, in the opinion of the CCWA Engineer, be reasonably excavated with a minimum 135 horsepower backhoe, in good condition and equipped with manufacturer's standard boom and rock points or similar approved equipment; and which must be systematically drilled and blasted or broken by power-operated hammer, hydraulic rock breaker or expansive compounds.

Rock Excavation: Removal of solid material, as the above specifies, and does not necessarily correspond to "rock" as implied by the names of geologic formations.

Sanitary Sewer System: Multiple pipes, manholes and other components that convey sewage and to which storm water, surface water, and ground water are not intentionally admitted.

SCADA: Supervisory Control and Data Acquisition system.

Service Connection: Fitting(s) connecting a service line or lateral from a property (lot) to a water main or sewer main.

Service Line: Pressurized pipe extending from a water main to a water meter or pressurized pipe extending from a water main to a fire hydrant.

Sewage: The combination of water-carried wastes from residential housing, institutional facilities, and commercial and industrial complexes together with such groundwater, surface water, and storm water as may inadvertently be present.

Sewer: A pipe or conduit that conveys sewage.

Sewer Main: Sewer to which one or more laterals are connected.

Sewer Outfall: Sewer to which one or more sewer mains are connected.

Sewer Trunk: Sewer to which one or more sewer mains or sewer outfalls are connected and discharges into a Water Reclamation Facility.

Suitable Soil: Soil that conforms to and as recommended by ASTM D 2321-89 (Reapproved 1995) and ASTM D 2487-00 and that is free of organic and/or deleterious material, expansive clay and rock fragments larger than three (3) inches.

UL: Underwriters Laboratory

Utility Contractor: Georgia Licensed Utility Contractor in accordance with the Official Code of Georgia, Chapter 43.

Water Distribution System: Pressurized pipes, valves and other components that convey potable water.

Water Main: Pressurized pipe used to convey potable water from a force main to a service line.

WRF: Water Reclamation Facility.

WPP: Water Production Plant.

3.01 General

A. The design of water distribution systems and sanitary sewer systems shall conform to the specifications herein.

B. Concurrent with plan submittal, the Design Engineer shall provide a completed Water Distribution/Sanitary Sewer Addition Submittal form. The Water Distribution/Sanitary Sewer Addition Submittal form is included in Appendix C.

3.02 Technical Review

A. Proposed water distribution system and sanitary sewer system plans shall be reviewed by the CCWA under the supervision of a Georgia Licensed Professional Engineer for technical adequacy and conformance to applicable requirements to determine that the systems are suitable for construction.

B. Upon receipt of a proposed development, the CCWA shall perform a feasibility study to determine whether the existing CCWA water distribution system and/or sanitary sewer system has sufficient capacity. The following review shall be completed.

<u>Water Distribution System</u>

1. The latest 12 months of reported production from the supplying WPP shall be examined to determine an average monthly production rate. A proposed development, whose supply requirement would cause the WPP to exceed the Georgia EPD permitted production rate, shall not be connected to the CCWA system.

2. Pressure and flow from the contributing water distribution system shall be examined to determine whether the additional supply requirement will adversely affect the surrounding system. A proposed development, whose supply requirement would adversely affect the surrounding system, shall not be connected to the CCWA system.

Sanitary Sewer System

1. The latest 12 months of reported discharge from the receiving WRF shall be examined to determine an average monthly flow rate. A proposed development, whose discharge would cause the receiving WRF to exceed the Georgia EPD permitted flow rate, shall not be connected to the CCWA system.

2. A capacity study shall be performed to determine whether the discharge from the development would exceed the capacity of the existing receiving sewers. A proposed development, whose discharge would exceed the capacity of the receiving sewers, shall not be connected to the CCWA system.

C. CCWA review comments shall be marked on Technical Review Checklists and noted on development plans in the color red (Red Line Comments). Technical Review Checklists used during the CCWA review are included in Appendix D.

3.03 Plan Processing

A. Water distribution system and/or sanitary sewer system plans shall be submitted to the CCWA. Two (2) separate sets of water distribution system and/or sanitary sewer system plans are required for each submittal during the CCWA review process.

B. The Design Engineer shall address CCWA review comments. Plans containing the original Red Line Comments shall accompany each re-submittal to the CCWA.

C. Four (4) separate sets of water distribution system and/or sanitary sewer system plans shall be required for final CCWA approval.

D. Soil Erosion and Sedimentation Control Plans pertaining to the overall Development shall be reviewed and approved by Clayton County T & D or the local issuing authority. Construction of any kind shall not begin on a project prior to the issuance of a Land Disturbance Activity permit.

E. The CCWA plan processing sequence is shown on the following chart.

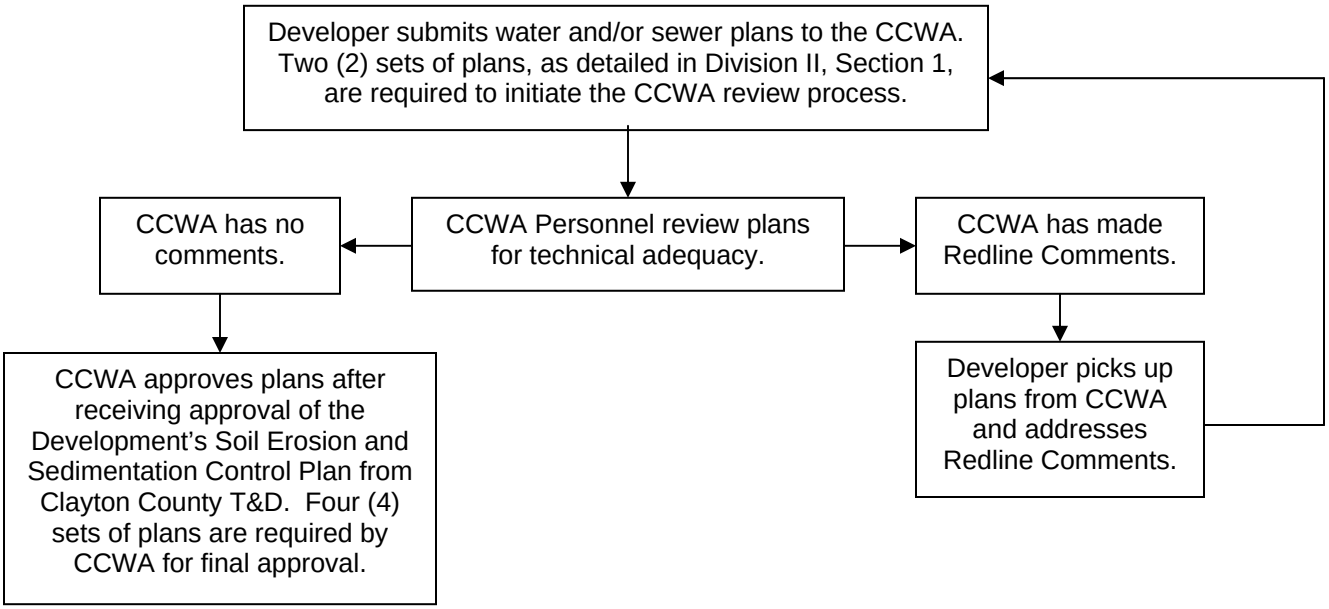

3.04 Approval by Regulatory Agencies

A. The Developer's Engineer shall address all deficiencies and resubmit plans in accordance with Division I, Sections 3.02 and 3.03. Plans shall not be approved until all deficiencies have been addressed to the satisfaction of the CCWA Engineer.

B. Note that plan approval by the CCWA Engineer shall not be construed, in any manner, to relieve the Developer of his responsibility for strict compliance with the specifications herein and any applicable laws and regulations.

C. Installation of water distribution systems and/or sanitary sewer systems shall not commence on any development until the CCWA has granted final approval of water distribution system and/or sanitary sewer plans and Clayton County T&D or the local issuing authority has issued a Land Disturbance Activity permit.

D. Note that other agencies may have regulatory authority and the Developer is responsible for obtaining other agency approval. Other agencies could be, but are not limited to, State of Georgia Department of Natural Resources, State of Georgia Department of Transportation, United States Army Corps of Engineers, United States Environmental Protection Agency, Georgia Power Company and Southern Natural Gas.

3.05 Period of Plan Approval

The approval period of water distribution system and/or sanitary sewer system plans shall be six (6) months. Approved plans that are not initiated or are inactive for a six (6) month period shall become invalid. Should an approved plan be invalidated, the CCWA Engineer shall determine whether the plan is still valid or whether a new system design is required.

4.01 General

A. Components of water distribution systems and sanitary sewer systems, to be owned by the CCWA, should be situated within streets' rights-of-way.

B. The following water distribution system and sanitary sewer system components, to be owned by the CCWA, shall be situated within an easement that is granted to the CCWA, when a street right-of-way is not available.

1. Force main.
2. Water main.
3. Water meter/check valve assembly.
4. Fire hydrant.
5. Sewer main.
6. Sewer outfall.
7. Manhole.
8. Other components required by the CCWA.

C. An easement shall not encroach into a structure's foundation and shall be clear of all obstructions not associated with the water and/or sanitary sewer system including but not limited to construction debris, fencing and trees.

D. Property developed and occupied by a lift station and/or an access road, to be owned by the CCWA, shall be platted and deeded to the CCWA.

4.02 On-Site Easement

A. "On-site" easements are those easements falling within the boundaries of the current phase of the development that are shown on the plat and are recorded through the process of recording the final plat.

B. Developer shall grant to the CCWA, the exclusive right to construct, reconstruct, operate, maintain, repair, replace, improve, alter, remove, relocate and inspect water distribution systems and/or sanitary sewer systems that are situated over, across and under the land wherein the water distribution systems and/or sanitary sewer systems lie on the Developer's property.

4.03 Off-Site Easement

A. "Off-site" easements are those easements falling outside the boundaries of the current phase of the development and shall be provided by the Developer and recorded by the CCWA for each property owner. Easements through property owned by the developer, including water and sewer lines that will be included in later phases of the same project, must be treated as routine off-site easements.

B. Off-site easements shall be negotiated and acquired by the Developer with the property owner.

C. Construction of the off-site water distribution systems and/or sanitary sewer systems shall not begin until all off-site easements for system completion are acquired, recorded and received by the CCWA Engineer.

4.04 Easement Size

A. The minimum width of a permanent on-site/off-site easement associated with water distribution system and sanitary sewer system components shall be 20 feet.

B. The minimum size of an easement associated with a water meter/check valve assembly shall be 20 feet by 30 feet.

C. Easement width or size may be increased or decreased at the discretion of the CCWA Engineer.

4.05 Deeded Property

A. The minimum size of deeded property associated with a lift station shall be 60 feet by 60 feet.

B. The minimum width of deeded property associated with an access road shall be 20 feet.

C. The size or width of deeded property may be increased or decreased at the discretion of the CCWA Engineer.

5.01 General

A. The installation of water distribution systems and sanitary sewer systems shall be in accordance with the approved plans and specifications herein.

B. A set of plans stamped approved by the CCWA shall be present on the job site whenever work is being performed on the water distribution system and/or sanitary sewer system.

5.02 Utility Contractor

A. A licensed Utility Contractor shall install water distribution systems and sanitary sewer systems.

B. Prior to commencing construction activities on a proposed water distribution system and/or sanitary sewer system, the CCWA Engineer shall receive a copy of the Utility Contractor's License.

5.03 CCWA Installation

A. The CCWA shall perform the following system components installation at a cost to the Developer/Owner.

1. Supply materials and labor to install water meter and check valve assemblies from 5/8 inch in diameter through two (2) inches in diameter.

2. Supply labor to tap water main.

3. Supply materials and labor to install a sewer main tap for a private individual.

B. The installation of residential water service lines and meter boxes can be performed by the CCWA at a cost to the Developer or can be performed by the Developer's Utility Contractor with approval by the CCWA.

5.04 Insurance Requirements

A. Utility Contractors performing work on CCWA funded or partially funded projects shall comply with current CCWA insurance and bonding requirements.

B. Companies such as railroads, electric power suppliers, natural gas suppliers, etc. may require Utility Contractors to furnish insurance, in addition to CCWA requirements when crossing their respective easements. The Utility Contractor shall provide such insurance as required.

5.05 Inspection

A. A CCWA Inspector, under the supervision of a Georgia Licensed Professional Engineer, shall inspect water distribution systems and sanitary sewer systems during all phases of construction to ensure the systems are being constructed in accordance with the plans approved by the CCWA and specifications herein.

B. The Developer shall provide the CCWA Engineer a 48-hour notice prior to commencing construction on a water distribution system and/or sanitary sewer system.

C. The Developer/Utility Contractor shall, at all times, permit and facilitate inspection of work by the CCWA. The presence of a CCWA Inspector or CCWA Engineer on the site of work shall not be construed to, in any manner, relieve the Developer/Utility Contractor of their responsibility for strict compliance with the approved plans and specifications herein.

D. The CCWA Inspector shall not change or modify the approved water distribution and/or sanitary sewer system plans or specifications herein without written approval from the CCWA Engineer.

E. The CCWA Inspector shall inform the Developer/Utility Contractor when construction is deficient from the approved plans and specifications herein. Deficiencies shall be addressed in a timely manner as determined by the CCWA Inspector. Construction activities and other pertinent information shall be recorded on an Inspection Report included in Appendix E.

F. The Clayton County Building Department shall perform inspections relating to electric power supply.

G. Deficiencies not addressed in a timely manner shall be justification for the CCWA to stop work on a project. The CCWA Engineer shall issue a Stop Work Order to the Developer/Utility Contractor in writing. Continued work on a project after being issued a Stop Work Order shall be justification to inform the appropriate legal counsel or Clayton County Government Agency for necessary enforcement actions.

5.06 Testing

A. Water distribution systems and sanitary sewer systems shall be subjected to pressure testing, televising and mandrel testing as detailed in Division IV. Testing shall be performed at the expense of the developer.

B. The CCWA shall be given a 48-hour notice prior to any testing. A CCWA Inspector shall witness all testing.

C. Testing for the compressive strength of concrete and density of compacted soil shall be performed at the expense of the Developer by CCWA approved geotechnical and material testing companies. Materials not meeting required specification shall be removed, replaced and retested for compliance at the expense of the Developer.

D. Results of tests performed by testing companies shall be provided to the CCWA Engineer. Testing forms used by the CCWA are included in Appendix F.

6.01 General

A. Provided the Developer has complied with the terms of these Policies and Procedures and the installed water distribution system and/or sanitary sewer system is in accordance with the approved plans and specifications herein, the CCWA shall allow the Developer/Owner to connect the new system(s) into the CCWA system(s). Copies of the CCWA letters approving construction of the Developer's water distribution system and/or sanitary sewer system are included in Appendix G.

B. CCWA cannot authorize the conveyance of wastewater to and/or from an approved or unapproved sanitary sewer system by means of pumping and hauling.

C. The conveyance of wastewater onto the ground or into a receiving stream is prohibited.

6.02 Connection to Existing Systems

A. The CCWA Inspector shall be notified at least 48-hours in advance of connecting to the CCWA systems.

B. A CCWA Inspector shall be present during connection of the Developer’s systems to the CCWA systems. Prior to installation, a CCWA Inspector shall approve all materials supplied by the Developer to be used in making the connection.

C. Upon completing a water distribution and/or sanitary sewer connection, the Developer’s systems shall be valved-off and/or immediately plugged, respectively, until Final Acceptance.

D. Should an unauthorized connection or connection without the presence of the CCWA Inspector be made to the CCWA systems, the Developer shall be subject to a fine and/or refusal of service. Under any circumstance, the Developer shall expose and thoroughly clean all piping and components of the connection for inspection by the CCWA. Noncompliant connections and/or damage to the CCWA system shall be repaired/replaced in conformance with the approved plans and specifications herein at the expense of the Developer.

7.01 General

Acceptance of the Developer's water distribution system and/or sanitary sewer system shall be considered by the CCWA at such time as the Developer has met all terms and conditions of the specifications herein.

7.02 Final Inspection

Prior to final acceptance, a CCWA Inspector shall perform a final inspection of the water distribution system and/or sanitary sewer system after all pavement is installed. The final inspection shall determine the proper installation of valve and meter boxes, the integrity of manholes, and the presence of debris in sewers and curb markings. Results of the inspection shall be recorded on a Final Inspection Report and is included in Appendix H. Deficiencies encountered shall be immediately addressed and an additional final inspection shall be required.

7.03 Warranty

The Developer shall warrant the development's water distribution system and/or sanitary sewer system and hold the CCWA harmless against all costs, expenses and losses, including, without limitation, incidental and consequential damages, resulting from any defects in the Developer's water distribution system and/or sanitary sewer system, including without limitation, defects in material and workmanship, which are discovered or arise within a minimum period of two (2) years beginning on the date of final acceptance by the CCWA. A longer warranty period may be required on certain material requirements and/or construction standards as indicated in the specifications.

7.04 Final Acceptance

A. Final acceptance of the Developer's water distribution system and/or sanitary sewer system by the CCWA shall be when written, signed and dated by the CCWA Engineer. A copy of the CCWA Final Acceptance Letter is included in Appendix I.

B. Upon issuance of Final Acceptance Letter, the Developer's new system(s) may be opened to the CCWA system(s).

1.01 General

The design and plan preparation of water distribution systems and sanitary sewer systems shall conform to the specifications herein.

1.02 Licensed Professionals

A. Water distribution system and/or gravity flow sanitary sewer system design and plan preparation for a residential subdivision or parts thereof on a Developer's property shall be performed by a Georgia Licensed Professional Engineer or Georgia Licensed Registered Land Surveyor who has sufficient knowledge to properly perform the design.

B. Water distribution system and/or gravity flow sanitary sewer system design and plan preparation for property off-site of a Developer's property shall be performed by a Georgia Licensed Professional Engineer who has sufficient knowledge to properly perform the design.

C. Water distribution system and/or gravity flow sanitary sewer system design and plan preparation for commercial/industrial property shall be performed by a Georgia Licensed Professional Engineer who has sufficient knowledge to properly perform the design.

D. Force main and sanitary sewer lift station design and plan preparation shall be performed by a Georgia Licensed Professional Engineer who has sufficient knowledge to properly perform the design.

E. The professional performing the design and preparing the plans shall seal each plan sheet with their stamp and sign their name across the stamp.

1.03 Reference Documents and Standards

General methods of design and construction shall conform to the specifications herein and the following. When standards conflict with one another, the CCWA Engineer shall determine the applicable standard.

A Georgia EPD, Minimum Standards for Public Water Systems, May 2000.

B. Georgia EPD, Rules and Regulations for Water Quality Control, Chapter 391-3-6, latest effective date.

C. Water Environment Federation, Regulation of Sewer Use, WEF Manual of Practice No. 3, latest edition.

D. Mississippi River Board of State Public Health and Environmental Managers, generally referred to as the “Ten (10) States Standards for Sewage Works”.

E. Gravity Sanitary Sewer Design and Construction, American Society of Civil Engineers Manuals and Reports on Engineering Practice No. 60, Water Environment Federal Manual of Practice No. FD-5, revised April 1982.

F. Utility Accommodations Policy and Standards, Georgia Department of Transportation, Office of Utilities, latest edition.

G. American Water Works Association Standards, latest editions.

H. Soil Surveys of Clayton County, Georgia, by the United States Department of Agriculture, Soil Conservation Service.

I. American National Standards Institute Standards, latest editions.

J. American Society for Testing and Materials Standards, latest editions.

K. Occupational Safety and Health Administration regulations, latest editions.

L. Georgia Department of Transportation specifications and regulations, latest editions.

M. American Society of Mechanical Engineers standards, latest editions.

N. National Electrical Manufacturer's Association standards, latest editions.

O. American Concrete Institute standards, latest editions.

1.04 Plan Requirements

A. Water distribution system and/or sanitary sewer system plans shall be comprised of the following sheets as required. Each sheet should be 24 inches by 36 inches in size.

1. Cover Sheet.
2. Site Plan Sheet.
2. Grading Plan Sheet.
3. Storm Water System Plan Sheet.
5. Water Distribution System Plan Sheet.
6. Water Distribution System Details and Construction Notes Sheet.
7. Sanitary Sewer System Plan Sheet.
8. Sanitary Sewer System Profile Sheet.
9. Sanitary Sewer System Details and Construction Notes Sheet.
10. Sanitary Sewer Lift Station Plan and Cross-Section Sheet.
11. Sanitary Sewer Lift Station Details and Construction Notes.
12. Soil Erosion and Sedimentation Control Plan Sheet.
13. Soil Erosion and Sedimentation Control Detail Sheet.

B. Water distribution and/or sanitary sewer system plan sheets shall be prepared and include as a minimum the information detailed on the Technical Review Checklist included in Appendix D.

C. Concurrent with the initial submittal of water distribution system and/or sanitary sewer system plans to the CCWA, a completed Water Distribution/Sanitary Sewer Addition Submittal form shall be submitted. The CCWA plan review process shall not commence until the Water Distribution/Sanitary Sewer Addition Submittal form is received. The Water Distribution/Sanitary Sewer Addition Submittal form is included in Appendix C.

1.05 Modifications to Plans

Water distribution system and/or sanitary sewer system plans approved by the CCWA shall not be modified or deviated from during construction unless the CCWA Engineer approves modifications or deviations in writing.

1.06 As-Built Drawings

A. As-Built Drawings of the installed water distribution system and/or sanitary sewer system shall be prepared and sealed in accordance with Division II, Section 1.01.

B. As-Built Drawings shall be completed upon connecting the development's water distribution system and/or sanitary sewer system to the CCWA system.

C. As-Built Drawings shall show all street names, right-of-way widths, related easements, lot number, location, size and material of all water distribution system and/or sanitary sewer system components.

D. As-Built Drawings shall be prepared using a survey that ties the development's water distribution system and/or sanitary sewer systems horizontally and vertically to the following state plane coordinate system or as amended by the CCWA.

Horizontal Control:	North American Datum 83/94.
Vertical Control:	National Geodetic Vertical Data 88.
Grid Zone:	Georgia West 1002.

E. The following certification shall be included on the As-Built Drawings and signed by the Design Engineer:

"I certify that the water distribution system and/or sanitary sewer system depicted by this As-Built Drawing was constructed in accordance with the plans approved by the CCWA. The information submitted on this As-Built Drawing is to the best of my knowledge and belief, true, accurate and complete."

F. The Developer's water distribution system and/or sanitary sewer system shall not be considered complete until the As-Built Drawings have been reviewed and approved by the CCWA Engineer. Note that one (1) reproducible set of the approved As-Built Drawings shall be submitted to the CCWA Engineer. The approved As-Built Drawings shall also be submitted to the CCWA Engineer in digital format (AUTOCAD Version 14 or newer version).

2.01 General

A. The following section shall be used as a guideline for the design of water mains and service lines that will supply residential, apartment, commercial and industrial complexes.

B. The CCWA may require the above referenced complexes to have multiple connection points to existing force mains or water mains.

C. The following certification shall be made by the Design Engineer and included with Water Distribution System construction notes:

"I certify that the proposed water distribution system has been designed in accordance with the CCWA Specification document titled "Standard Specifications for Water Distribution Systems and Sanitary Sewer Systems", Latest Edition including all amendments.

2.02 Design Usage Rates and Hydraulics

A. Design shall be based on the following average daily domestic usage rates. Daily usage rates may be increased at the discretion of the CCWA Engineer.

1. Residential House: 300 gallons per day per connection.
2. Apartment and Mobile Home: 233 gallons per day per unit.
3. Hotel and Motel: 126 gallon per day per room.
4. Commercial and Industrial: Indicate as required.

B. Indicate on plans whether structures require fire suppression systems. If so, then indicate the required fire suppression system usage rate (gallons per minute).

C. The designed system shall provide for the following fire flow demands in the development.

1. Residential Area: 750 gallons per minute.
2. Commercial/Industrial Area: 1,000 gallons per minute.

D. The following range of supply pressures shall be assumed when sizing system components.

Pressure (min.): 20 psi.
Pressure (max.): 150 psi.

2.03 Water Line Material and Size

A. Water mains and associated fittings shall be ductile iron with a minimum diameter of eight (8) inches.

B. Water main pipe assembly shall be push-on joint unless indicated otherwise.

C. Water main pipe assembly in a bore casing shall be restrained joint unless indicated otherwise.

D. Service line supplying a single fire hydrant within the right-of way shall be ductile iron with a minimum diameter of six (6) inches.

E. Service line serving one (1) residential lot shall be copper with a minimum diameter of three-quarter (¾) inch.

F. Service line serving two (2) residential lots shall be copper with a minimum diameter of one (1) inch. The service line shall be fitted with a copper tee. The tee and service lines, coming from the tee, shall have a minimum diameter of three-quarter (¾) inch.

G. Service line serving commercial/industrial buildings shall be copper with a minimum diameter of three-quarter (3/4) inch and a maximum diameter of three (3) inches or ductile iron sized as necessary for the demand.

2.04 Water Line Location

A. Situate water mains outside of pavement, within street right-of-way when possible, at five (5) feet beyond the back of curb or edge of pavement or at location approved by the CCWA Engineer.

B. Situate water mains on the north and east sides of streets when possible.

C. Water mains shall have a minimum ten (10) foot horizontal separation from any sewer.

D. Water mains constructed parallel to streams shall be located such that the nearest area of disturbed soil is greater than 25 feet from the stream bank.

E. A service line supplying a single lot shall be located nearest a respective property boundary as practical.

F. A service line serving two (2) lots, from the water main to the meter, shall be located in-line with the lots' common property boundary.

G. No water main or service line shall be constructed on solid waste landfills.

H. No water main or service line shall be constructed to serve a structure that is constructed on or to be constructed on a solid waste landfill.

I. Each water main and service line shall be locatable.

J. Use Detail Nos. 1.1, 2.1 and 2.2 when applicable.

2.05 Fire Hydrant Location and Spacing

A. Hydrants shall be situated within the street's right-of-way adjacent to the right-of-way boundary.

B. A hydrant shall be situated at the end of each cul-de-sac or dead end street.

C. Fire hydrants servicing residential areas shall be spaced a maximum of 500 feet as measured along the edge of pavement. No lot shall be greater than 250 feet from a fire hydrant.

D. Fire hydrants servicing commercial and industrial areas shall be spaced a maximum of 300 feet as measured along the edge of pavement.

E. Use Detail Nos. 3.1, 4.1 and 5.1 when applicable.

2.06 Valve Size and Location

A. Valves shall be of the same size as the pipe in which the valve is situated, unless noted otherwise.

B. A corporation valve shall be situated at the tap location into a water main of a three-quarter (3/4) inch or one (1) inch service line.

C. A ball valve shall be situated downstream of tapping saddle or tapping sleeve when tapping into a water main or force main with a 1-1/2 inch or two (2) inch service line. The ball valve shall be situated within a meter vault.

D. Gate valves shall be situated in-line with water mains as follows, unless noted otherwise. The placement of gate valves under pavement shall be allowed, unless noted otherwise.

1. Attach tapping gate valve immediately downstream of tapping saddle or tapping sleeve when tapping into water main or force main with a smaller water main or service line.

2. Situate gate valve immediately downstream of a tee when connecting into a water main.

3. Situate gate valve on each immediate side of a three (3)-way connection or four (4)-way connection.

4. Situate gate valve immediately upstream of a fire hydrant when hydrant is situated within street right-of-way.

5. Situate gate valve within street right-of-way when fire service extends beyond right-of-way.

6. Situate gate valve in water mains at a maximum spacing of 2,000 feet.

7. Gate valve shall be situated outside of vault immediately upstream and downstream of three (3) inch and larger water meter/check valve assemblies.

8. A slip type valve box shall be situated over a gate valve.

E. A curb stop shall be situated inside of meter box immediately upstream of five-eighths (5/8) inch through two (2) inch water meter/check valve assemblies.

F. Use Detail No. 6.1 when applicable.

2.07 Water Line Depth

A. Water mains and service lines to fire hydrants shall have a minimum suitable soil cover of four (4) feet. The depth of four (4) feet from finish grade to top of pipe shall be determined as follows.

1. As measured from edge of pavement (top back-of-curb) when the finish grade elevation of the pipe route is equal to or greater than adjacent pavement elevation.

2. As measured from finish grade elevation of the pipe route when the pipe route elevation is less than the adjacent pavement elevation.

3. Other depth approved by the CCWA Engineer.

B. Water mains crossing under a creek or ditch shall have a minimum suitable soil cover of two (2) feet.

C. Water mains shall have a minimum 18-inch vertical separation from any sewer.

D. Service lines under pavement shall have a minimum suitable soil cover of 2.5 feet as measured from top of curb or top of pavement.

E. Service lines outside of pavement shall have a minimum suitable soil cover of 1.5 feet as measured from the meter.

F. Water mains 18 inches in diameter and larger shall be checked for buoyancy when submerged in groundwater or situated within the 100-year flood zone.

G. Use Detail Nos. 1.1, 7.1 and 8.1 when applicable.

2.08 Thrust Restraint

A. Thrust restraint shall be installed at all fittings, hydrants, valves and other locations deemed necessary by the CCWA Engineer.

B. Thrust restraints at hydrants and valves shall be accomplished by installing a minimum of two (2) eyebolts on the hydrant or valve and tying to an adjacent fitting or concrete tie-back using three-quarter (3/4) inch stainless steel threaded rod.

C. Thrust restraint at fittings shall be accomplished by using one of the following methods.

1. Cast-in-place concrete blocking installed to dimensions as shown on thrust block detail.

2. Restrained joint pipe and fittings installed upon approval by CCWA Engineer.

D. Use Detail Nos. 3.1, 4.1, 9.1 and 10.1 when applicable.

2.09 Water Meters and Backflow Prevention

A. All water usage including fire and irrigation shall be metered and have backflow prevention devices.

B. All water usage shall be metered using a single meter when possible.

C. Meters shall be sized according to the anticipated demand and Division III, Section 7 of this document.

D. Each meter shall have a backflow device consisting of double check valve assembly.

E. Water meters and backflow devices shall be housed in boxes or vaults.

F. Water meters and backflow devices shall be situated within the street right-of-way or in an easement area.

F. Use Detail Nos. 11.1, 12.1, 13.1, 14.1, 15.1, 16.1 and 17.1 when applicable.

3.01 General

A. The following section shall be used as a guideline for the design of gravity flow sanitary sewer systems; pipe diameter not to exceed 36 inches.

B. Sanitary sewer system design shall incorporate the following CCWA Sewer Use Ordinances:

1. Section 98-7 (F) – Grease Management Program.
2. Section 98-7 (G) – Oil/Water and Sand/Grit Interceptors.

C. The following certification shall be made by the Design Engineer and included with Sanitary Sewer System construction notes:

"I certify that the proposed sanitary sewer system has been designed in accordance with the CCWA Specification document titled "Standard Specifications for Water Distribution Systems and Sanitary Sewer Systems", Latest Edition including all amendments.

3.02 Design Flow Rates

A. Design shall be based in the following average daily flow rates for single-family and multi-family residences. Daily flow rates may be increased at the discretion of the CCWA Engineer.

1. Residential House: 300 gallons per day per connection.
2. Apartment and Mobile Home: 233 gallons per day per unit.
3. Hotel and Motel: 126 gallon per day per room.

B. Design of industrial and commercial sanitary sewer flow rates shall be a minimum of 1.5 times that of the design average daily water usage or as approved by the CCWA Engineer.

C. A peaking factor of 3.0 shall be used when determining a "Peak Design Flow". The peaking factor may be changed at the discretion of the CCWA Engineer.

3.03 Hydraulics

A. Gravity sewer pipe should be designed to carry “Peak Design Flow” at one-half full.

B. Gravity sewer pipe shall have straight alignment and consistent grade change between manholes.

C. Sewers shall yield mean velocities of not less than 2.0 feet per second based on the Manning Formula using an "n" value of 0.013.

D. Recommended and absolute minimum pipe slopes for gravity sewer based on the size of pipe to be installed are summarized in the following table.

Slope Requirements

Diameter	Absolute Minimum	Recommended Minimum
6-inch	0.40%	0.70%
8-inch	0.40%	0.70%
10-inch	0.29%	0.50%
12-inch	0.22%	0.40%
14-inch	0.22%	0.40%
15-inch	0.15%	0.30%
16-inch	0.15%	0.30%
18-inch	0.12%	0.24%
20-inch	0.12%	0.24%
21-inch	0.10%	0.20%
24-inch	0.08%	0.16%
27-inch	0.07%	0.14%
30-inch	0.06%	0.12%
36-inch	0.05%	0.10%

E. Sewers with slopes less than the recommended minimum may be accepted on a site by site basis.

F. The over sizing of pipe to meet minimum grade requirements shall be prohibited.

G. A tangent at a terminal manhole shall have a minimum slope of 1.00 %.

H. The maximum slope of a gravity sewer shall be 15.0%. When approved by the CCWA Engineer, slopes between 15.0% and 20.0% may be used with the addition of concrete anchors (dead man). The Developer's Engineer shall determine the size and spacing of anchors. The CCWA Engineer shall approve all anchor designs.

I. When increasing the size of gravity sewer pipe, pipe crowns shall be matched at manholes.

J. Angle formed by alignment of influent and effluent sewer pipe at manhole shall be greater than (>) or equal (=) to 90º and less than (<) or = to 270º.

K. The surcharging of manholes shall be prohibited.

3.04 Sewer Material and Size

A. Sewer outfall, sewer main and lateral pipe and associated fittings shall be ductile iron or PVC.

B. Sewer pipe assembly shall be push-on joint unless indicated otherwise.

C. Transition coupling used to connect pipes of differing material shall be rigid and made of steel and/or ductile iron or other material approved by the CCWA Engineer.

D. Sewer outfalls and sewer mains shall have a minimum diameter of eight (8) inches.

E. Laterals shall have a minimum diameter of six (6) inches.

F. Sewers of PVC shall not exceed eighteen (18) inches in diameter.

G. Sewers eighteen (18) inches in diameter and larger shall be checked for buoyancy when submerged in groundwater or situated within the 100-year flood zone.

3.05 Sewer Location

A. Situate sewer outfalls and mains at the centerline of a right-of-way when possible or at the centerline of an easement.

B. Sewer outfalls and mains shall have a minimum ten (10) foot horizontal separation from any water main.

C. Lateral from the sewer main to the structure being served shall be located nearest the center of the property as practical. A separate lateral shall service each property.

D. When possible, route laterals to manholes rather than direct connection into sewer main and as follows.

   1. Lateral connections into an in-line manhole shall be limited to two (2).

   2. Lateral connections into a terminal manhole shall be limited to three (3).

   3. Invert of a lateral connection at a manhole shall be installed at an elevation not greater than (2) two feet above the invert of the manhole.

E. Sewer outfalls, mains and laterals constructed parallel to streams shall be located such that the nearest area of disturbed soil is greater than 25 feet from the stream bank.

F. Sewers shall not be installed under or over any lake, reservoir or detention pond.

G. No sewer system component shall be constructed on solid waste landfills.

H. No sewer system component shall be constructed to serve a structure that is constructed on or to be constructed on a solid waste landfill.

I. Each sewer outfall, sewer main and lateral shall be locatable by means of mylar tape, wire or other method approved by the CCWA Engineer.

J. Use Detail No. 1.1, 2.2 and 2.3 when applicable.

3.06 Sewer Depth and Structural Integrity

A. Sewer outfalls and mains shall have a minimum suitable soil cover of four (4) feet or other depth approved by the CCWA Engineer.

B. Sewer main shall be situated at a depth as to allow lateral to be constructed at a minimum two (2) percent slope from sewer main to probable structure location on each lot to be served assuming lateral is three (3) feet in depth at probable structure location.

C. Vertical connection of a lateral into a sewer main shall be prohibited.

D. Top of pipe shall be two (2) feet below any stream or ditch when crossed or paralleled.

E. DIP shall be used for the following conditions.

1. Where depth of soil cover is less than four (4) feet before or after sewer installation.

2. Where depth of soil cover is greater than fifteen (15) feet before or after sewer installation.

3. Where sewer crosses over or under a storm drain pipe.

4. Where sewer crosses over or under a water main.

5. Where sewer crosses under a stream or ditch.

6. Other locations deemed necessary by the CCWA Engineer.

F. When a sewer crosses under a stream, a minimum of two (2) cast-in-place concrete collars shall be installed on the pipe, down gradient from the stream.

G. Sewers shall have a minimum 18-inch vertical separation from any water main.

H. Use Detail Nos. 18.1, 19.1 and 20.1 when applicable.

3.07 Manhole Location and Spacing

A. Provide a manhole at each change in grade, pipe size, alignment, intersection and at terminal point of sewer.

B. Space manholes a maximum of 400 feet of continuous run for pipes 16 inches in diameter and smaller.

C. Space manholes a maximum of 500 feet of continuous run for pipes 18 inches in diameter and larger.

D. Manholes situated within the 100-year flood elevation zone shall have top of cover elevations above the 100-year flood elevation or cover shall be with gasket and bolted down.

E. Manholes situated within the 100-year flood elevation zone and/or the groundwater table shall be checked for buoyancy.

F. Manhole inverts shall be constructed to provide a smooth transition between influent and effluent piping.

G. Manholes situated in pavement shall have top of covers level with finished grade.

H. Manholes situated in non-paved areas shall have top of covers a minimum of twelve (12) inches above finished grade.

I. Use Detail No. 21.1 when applicable.

4.01 General

The following section shall be used as a guideline for the design of force mains where the pipe diameter does not exceed 36 inches.

4.02 Hydraulics

A. Force mains shall be sized to allow for a minimum velocity of 2 ft/s and a maximum velocity of 5 ft/s.

B. Sanitary sewer force mains shall not flow down grade into a receiving manhole.

C. Combination air release/vacuum valves shall be installed in force mains at all high points of elevation and spaced along apparent flat routes as determined by the CCWA Engineer.

4.03 Force Main Material and Size

A. Force mains and associated fittings shall be ductile iron with a minimum diameter of four (4) inches.

B. Water main pipe assembly shall be push-on joint unless indicated otherwise.

C. Water main pipe assembly in a bore casing shall be restrained joint unless indicated otherwise.

4.04 Force Main Location

A. Force mains shall be situated outside of pavement within a street right-of-way near the boundary of the right-of-way or centered within an easement.

B. Water distribution and raw water force mains shall be located on the opposite side of pavement from a sewer when possible and/or shall have a minimum ten (10) foot horizontal separation from any sewer.

C. Force mains constructed parallel to streams shall be located such that the nearest area of disturbed soil is greater than 25 feet from the stream bank.

D. No force main shall be constructed on solid waste landfills.

E. No force main shall be constructed to serve a component that is constructed on or to be constructed on a solid waste landfill.

F. Each force main shall be locatable by means of detection tape or wire as approved by the CCWA Engineer.

4.05 Force Main Depth

A. Force mains shall have a minimum suitable soil cover of four (4) feet. Depth from finish grade to top of pipe shall be determined as follows.

1. As measured from edge of pavement when pipe route existing/finish grade elevation is equal to or greater than adjacent pavement elevation.

2. As measured from pipe route existing/finish grade elevation when the route elevation is less than the adjacent pavement.

3. Other depth approved by the CCWA Engineer.

B. Force main crossing under a creek or ditch shall have a minimum suitable soil cover of two (2) feet.

C. Water distribution force mains shall have a minimum eighteen (18) inch vertical separation from any sewer.

D. Force mains eighteen (18) inches in diameter and larger shall be checked for buoyancy when submerged in groundwater or situated within the 100-year flood zone.

E. Use Detail Nos. 7.1 and 8.1 when applicable.

4.06 Thrust Restraint

A. Thrust restraint shall be installed at all fittings and other locations deemed necessary by the CCWA Engineer.

B. Thrust restraint at fittings shall be accomplished by using one of the following methods.

   1. Cast-in-place concrete blocking installed to dimensions as shown on thrust block detail.

   2. Restrained joint pipe and fittings installed upon approval by CCWA Engineer.

C. Use Detail No. 9.1 when applicable.

4.07 Combination Air Vacuum/Release Valves

A. Combination air vacuum/release valves shall be sized according to the manufacturer's recommendations.

B. Valves designated for use with water or sewage shall be used on the respective system.

C. Valve shall be housed in a "dog house" style manhole.

D. Use Detail No. 22.1 when applicable.

5.01 General

A. This section shall be used as a guideline for the design of aerial pipe that pertains to water distribution piping and sanitary sewers.

B. Requirements of Division II, Sections 2, 3 and 4, where applicable, shall apply to the design of aerial piping.

C. A pipe that crosses over a perennial or annual stream must not cause an impedance to navigation or cause water to pool upstream of the pipe.

5.02 Aerial Pipe Material

A. Aerial pipe shall be ductile iron or steel.

B. Aerial pipe assembly shall comply with manufacturers' recommendations.

C. Aerial pipe fittings shall comply with manufacturers' recommendations and specifications herein.

5.03 Aerial Pipe Support

A. Aerial pipe supports shall be situated on suitable soils. Prior to support design, soils beneath proposed aerial pipe route shall be examined by a soils testing company for bearing capacity and suitability for construction. A soils report shall accompany the proposed aerial route.

B. Aerial pipe support spacing shall not exceed 40 feet. Aerial pipe support spacing shall be based on results of the soil's bearing capacity and spacing recommendations of the pipe and fitting manufacturers.

C. Aerial pipe supports shall be comprised of concrete piers set atop concrete spread footings. Spread footing size shall be based on results of the soil's bearing capacity and reactive forces within the aerial pipe.

D. Minimum pier diameters and footing sizes shall be as summarized in Detail No. 23.1.

E. Pipe shall be secured to piers as indicated on Detail No. 23.1.

F. Use Detail No. 23.1 when applicable.

6.01 General

A. This section shall be used as a guideline for the design of lift stations capable of pumping up to 700 gallons per minute.

B. Pumps, motors and associated components that produce a complete lift station shall be furnished as a package by a single manufacture.

C. A backup power system shall be provided for each lift station.

D. Lift stations shall be monitored from remote location via SCADA. A single supplier shall furnish all components of the SCADA system.

E. Material requirements specific to lift stations, stand-by power and SCADA are included in this section.

F. A minimum of two (2) sets of operational and equipment manuals for each component of the lift station, backup power system and SCADA system shall be provided prior to final acceptance.

G. The following information shall be submitted and approved prior to plan approval.
   a) 100-year flood elevation contour; electrical and mechanical components shall be situated above the 100-year flood elevation.
   b) Total Dynamic Head (friction loss through force main, static head, friction loss through pumps and suction piping).
   c) Pump Net Positive Suction Head available and required.
   d) Pump operating system curve plotted onto manufactures' pump curve.
   e) Pump cycle time.
   f) Wet well buoyancy calculation.
   g) Radio communication path survey.

6.02 Lift Station Package

A. Pumps

1. A minimum of two (2) above ground self-priming centrifugal pumps of the same size and capable of passing a three (3) inch diameter sphere shall be provided.

2. Pumps shall be generally as follows.
   a) Pump casing shall be Gray Iron No. 30.
   b) Impeller shall be open type, 2 vanes, 60-40-18 ductile iron.
   c) Impeller shaft shall be 4140 alloy steel.
   d) Wear plate shall be replaceable 1020 steel.
   e) Cover plate (removable), bearing housing, seal plate and flanges (class 125#) shall be Gray Iron No. 30.
   f) Flap valve shall be neoprene.
   g) Bearings shall be open ball with oil lubrication.
   h) O-rings shall be Buna N.
   i) Oil level sight gauge.
   j) Pressure relief valve (brass).
   k) Lifting eye.
   l) Pump casing shall be coated with a prime coat of a zinc based synthetic primer and finish coat be automotive grade acrylic enamel (white color).

3. Pumps shall be sized so that the operational system curve intersects the middle one-third portion of the pump operational curve. Each pump shall have the discharge capacity to overcome the development's peak discharge. Components shall be sized to provide two (2) to five (5) pump cycles per hour at average daily flow conditions.

4. Power shall be transmitted to pump by means of a V-belt drive assembly. Each drive assembly shall have a minimum of two (2) V-belts. Drive assemblies shall be enclosed on all sides by solid or perforated sheet metal.

5. Each pump shall be equipped with an automatic air release valve assembly. Valves shall open automatically during pump priming or re-priming cycle and shall close automatically at pump full flow to eliminate re-circulation of liquid to the wet well.

6. Each pump shall be equipped with suction and discharge pressure gauges mounted on a resilient panel. Pressure gauges shall be as follows.
   a) Four (4) inches in diameter.
   b) Glycerin filled for "no shock".
   c) Graduated from a 0-inch to 70-inch water column.
   d) Equipped with brass shut off valves and fittings.

6. The following list of spare pump parts shall be provided for each lift station.
   a) One (1) cover plate O-ring.
   b) One (1) rotating assembly O-ring.
   c) One (1) mechanical seal.
   d) One (1) set of rotating assembly shims.

Acceptable Manufacture - Model
Gorman-Rupp Company – Super "T" Series.
Other Approved.

B. Electrical

1. Each pump shall be equipped with a motor sized so that the pump operational system curve intersects the middle one-third portion of the pump operational curve. Motor shall not be overloaded at the design condition or at any head in the operational system curve. Each motor shall be generally as follows.
   a) Horizontal, open drip proof, induction type.
   b) Produce a normal starting torque with low starting current characteristics.
   c) Require 3-Phase, AC electric current.
   d) Copper windings.
   e) Housed in NEMA design cast iron frame.
   f) Frame and housing shall be coated with a prime coat of a zinc based synthetic primer and finish coat be automotive grade acrylic enamel (white color).

Acceptable Manufacturer
Toshiba.
Other Approved.

2. Electrical control components shall be housed in a NEMA 3R stainless steel panel enclosure.
   a) Control components shall be mounted to a removable back panel that is secured to the enclosure.
   b) Enclosure door shall be gasketed with neoprene, hinged and equipped with captive closing hardware.

3. A circuit breaker shall be provided for each pump motor.
   a) A padlocking operating mechanism shall be installed on each motor circuit breaker.
   b) Operator handles for the mechanism shall be located on the exterior of the control compartment door, with interlocks which permit the door to be opened only when circuit breakers are in the "Off" position.

4. A NEMA rated magnetic motor starter shall be provided for each pump motor.
   a) Power contacts shall be double-break and made of cadmium oxide silver.
   b) Motor starters shall be equipped to provide under voltage release and overload protection on all three phases.
   c) Motor starter contacts shall be easily replaceable without removing the motor starter from its mounted position.
   d) Motors having a 20-horse power rating or larger shall be equipped with soft start.

5. Motor overload relays shall be provided and have visual trip indication with trip-free operation. Reset buttons shall permit resetting of each motor without opening control panel door.

6. Control circuits shall be protected by a circuit breaker which shall be connected in such a manner as to allow control power to be disconnected from all control circuits.

7. A Hand-Off-Auto switch shall be provided for each pump to permit manual start and stop of each pump individually and to select automatic operation of each pump under control of the level control system.

8. A three position sequence selector shall be provided to select the automatic alternation of the pumps or to select pump number 1 to be the lead pump for each pumping cycle or to select pump number 2 to be the lead pump for each pumping cycle.

9. A run indication light for each pump shall be mounted on the panel enclosure. Light shall indicate that the motor is or should be running.

10. A thermostat shall be mounted on each pump to detect high temperature. Should excessive temperature exist, protection circuitry shall override level control system and turn off pump motors to protect against excessive temperatures. An indicator light shall be located on front of control panel. Pump shall remain locked out until pump motor is manually reset.

11. Elapse time indicator shall be mounted on each motor to indicate total run time in hours and tenths of hours.

C. Liquid Level Control

1. Liquid Level in wet well shall be monitored via "Electronic Pressure Switch 2000" (EPS-2000 controller) and shall include integral components to sense pressure conditions. The controller shall be equipped as follows.
   a) Level control electrical enclosure: NEMA 1 stainless steel.
   b) EMI and RFI suppression.
   c) DC-current power supply and 108 – 132/60/1 AC-current.
   d) Function in temperature range of 0° F through 131° F.
   e) Control range from zero (0) to twelve (12) feet with a repeat capacity of +/- 0.1 feet.
   f) Equipped with pump start delays preset at a fixed time delay of five (5) seconds to prevent simultaneous motor starts.

2. Provide high water alarm visible indicator on control panel. Maintain alarm signal until manual reset.

3. Provide high water alarm audio indicator. Maintain alarm signal until manual reset of silence circuit.

4. Discrete output signal wiring shall be installed on pre-wired terminal blocks for SCADA monitoring. The signal output shall be for wet well high level, pump motor temperature and pump operation status.

5. Provide the following liquid level elevations on design drawings: Lead Pump "On", Lead Pump "Off", Lag Pump "On", Lag Pump "Off", High Water Alarm.

D. Suction and Discharge Piping

1. Piping shall be minimum 4-inch diameter, flanged, ductile iron.

2. The following shall be provided on the suction side of the pumps.

a) Provide a flanged customer connection on each suction line drilled to a standard 125# template.
b) Provide long radius 90º reducing elbow at each pump. Elbow shall be no smaller than 4-inch diameter.
c) Provide long radius 90º reducing elbow at intake of each suction line. Elbow shall be 2-inches in diameter larger than the suction line. The elbow shall be aligned to the center of the wet well.

3. The following shall be provided on the discharge side of the pumps.
   a) Provide a flanged customer connection on discharge side drilled to a standard 125# template.
   b) Provide a stainless steel swing check valve at each pump.
   c) Provide a 3-way non-lubricated, taper type, plug valve providing drip tight shutoff.

4. Provide equivalent sized 2-way plug valve and tee at header pipe to permit emergency access to discharge force main after isolation of pumps.
   a) Valve body shall be cast iron with flanged end connections drilled to a standard 125# template.
   b) Valve shall be of the non-lubricated type, furnished with a drip-tight shutoff plug mounted in stainless steel or Teflon over phenolic bearings and shall have a resilient facing bonded to the sealing surface.
   c) Bypass connection shall be accessible behind the hinged access panel on the wet well side of the station enclosure and shall terminate with a male OPW type quick connect fitting.

E. Equipment Enclosure

1. Equipment Enclosure shall consist of fiberglass reinforced orthophthalic polyester resin, containing no fillers, with a minimum of 30% glass fibers approximately 1-1/4 inch long and a maximum of 70% resin.

2. Fiberglass shall be a minimum of 3/16-inch thick and exterior side coated with “green” pigmented resin. Interior side of fiberglass shall be coated with a polyester-rich resin or gel.

3. Enclosure style shall be one of the following.
   a) Enclosure shall consist of four (4) vertical corner panels, one (1) roof panel and four (4) hinged access panels. Hinged panels shall be secured

by key lockable handle operating a two-point latch. Locks shall be keyed to the standard CCWA configuration.

b) Enclosure shall be of the quanset type with movable cover that slides to right or left for access to enclosure. A separate access door shall be provided for routine maintenance.

4. Enclosure shall be equipped with louvered vent with sliding door for ventilation.

5. Enclosure shall be equipped with a roof or wall mounted ventilation fan, thermostatically controlled to operate above the temperatures of 70°F. Fan motor and control circuit shall be protected by a thermal-magnetic air circuit breaker.

7. Enclosure shall be equipped with a duplex GFI utility receptacle providing 115 volt, AC-current. Receptacle shall be protected by a 15-amp thermal-magnetic circuit breaker.

8. Enclosure shall be equipped with a space heater (1300/1500 watt) AC-current with chord and grounding plug.

9. Enclosure shall be equipped with a 200-watt light. Fixture shall be vapor tight and centrally located to provide light to all components within enclosure. Light circuit shall be protected by a thermal-magnetic air circuit breaker.

F. Use Detail Nos. 24.1 and 25.1 when applicable.

<u>Acceptable Manufacturer for Lift Station Package</u>

1. Gorman – Rupp Company.
2. Other Approved.

6.03 Backup Power System

A. Each lift station shall be equipped with one (1) preassembled (factory built), skid-mounted, weatherproof, backup power system.

1. The backup power system shall monitor the incoming electrical utility and, should power from the utility be interrupted, supply the power required to operate one lift station pump motor and required controllers.

2. Backup power system shall perform using a maximum 85% of its rated capacity to operate two (2) motors in series or four (4) motors in staged series based on the pump motor's calculated load. System shall provide for a 10 to 15 second delay for start-up of the second motor(s); a 20 kw generator is a minimum.

3. Backup power system within 100 feet of an occupied structure shall be equipped with a sound attenuation device to reduce noise levels to less than 80 decibels.

4. A five (5) year warranty shall be provided for the backup power system.

B. The backup power system shall supply three-phase power and be generally equipped as follows.

1. Enclosure; enclosure shall house all components of the backup power system and shall include as a minimum the following.
   a) Seamless fiberglass cowling as follows.
      1) Fiberglass shall have a gel coating of suitable thickness and density to provide durability, abrasion resistance, color fastness, gloss retention and shall be impervious to sewage, grease, oil, diesel or other common chemicals.
      2) Walls and ceiling shall be solid fiberglass having minimum 3/16 inch thickness and constructed in accordance with ASTM D-579.
      3) Enclosure shall be capable of withstanding a wind load of 85 miles per hour. The roof shall be capable of withstanding a minimum loading of 30 psf. All beams and trusses shall be fiberglass.
      4) Exterior color of enclosure shall be white.
      5) Tip-up design equipped with mounted gas cylinders such that operator shall not exert more than 25 pounds of lifting force to tip the enclosure to the full open position.
      6) Enclosure shall be hinged securely at one end to a steel base. Hinges shall be for heavy duty use, cadmium plated and epoxy coated.
   b) Steel base as follows.
      1) Base shall of size to accommodate fiberglass cowling.
      2) Base shall be constructed of steel channel with transverse mid beams supporting a ¼ inch thick steel deck.

3) All steel surfaces shall be prepared to a SSPC –SP6 condition and finished with an epoxy coating system.
4) Steel base shall be fitted with an integral doubled wall fuel tank having such capacity as to supply engine/generator set for a 24-hour continuous operation period. Diesel fuel tank shall be furnished with a bacteria inhibitor to prevent bacteria buildup.

c) Louvers as follows.
1) Engine intake and exhaust louvers sized to provide sufficient air for both cooling and combustion.
2) Louvers shall be 2 inch multi-blade, minimum 12-gauge anodized aluminum, 6063-T5 alloy with removable 5/8 inch aluminum mesh.
3) A duct assembly shall be provided between the engine radiator and the exhaust louver.
4) Louvers and duct assemblies shall be factory installed.

2. Engine/generator; engine/generator set shall be manufactured by Onan/Cummings and include as a minimum the following.
a) Electric starter.
b) Positive displacement full pressure, lubrication oil pump with full flow lubrication oil filters.
c) Engine speed governor.
d) Battery and battery charging alternator with solid state regulator.
e) Fuel system as follows.
1) No.2 diesel fuel.
2) Replaceable dry element air cleaner, air supply, return and vent lines.
3) Fuel filter with replacement element.
4) Engine driven displacement fuel pump.
5) Fuel system piping. Piping shall be black iron.
f) Engine mounted thermostatically controlled water jacket heaters.
g) Engine cooling system as follows.
1) Engine mounted radiator system.
2) Belt driven pusher fan.
3) Coolant liquid and pump.
4) Thermostat temperature control.
5) Radiator with duct adapter flange.

h) Exhaust system as follows.
   1) Spiral type exhaust muffler. Muffler weight shall not be supported by the engine.
   2) Exhaust piping shall be routed through the side wall of the backup power system's base and terminated outside enclosure.
   3) Piping outside enclosure shall be insulated with a minimum 2-inch thick calcium silicate thermal insulation with aluminum shroud.
   4) Provide sound attenuation as required.

i) Engine protective devices to indicate alarm and engine shutdown as follows. Provide as discreet outputs for SCADA monitoring.
   1) Low coolant temperature alarm.
   2) Low coolant level shutdown.
   3) Low lubrication oil pressure alarm and shutdown.
   4) High coolant temperature alarm and shutdown.
   5) Over speed shutdown.
   6) Over crank lockout.
   7) Transfer switch off.
   8) External warning light. (outside cowling).

j) Alternator shall be as follows.
   1) 3-phase, broad range, reconnectable with12 leads.
   2) Single bearing and directly coupled to the drive engine through a flexible coupling for self alignment.
   3) 4-pole, revolving field type with static exciter and magnetic amplifier voltage regulator. Voltage regulation shall be within +/- 5% of the rated voltage. Sustained voltage dip shall be less than 12% of rated voltage when full load and rated power factor is applied. Recovery to stable operation shall occur within two (2) seconds.
   4) Alternator, exciter and voltage regulator shall be manufactured by the same manufacturer as the engine/generator.

k) The following set controls shall be included on a lighted unit mounted control module.
   1) Oil pressure gauge.
   2) Coolant temperature gauge.
   3) Running time meter.
   4) Charge rate ammeter.
   5) Manual reset field circuit breaker.
   6) Manual selector switch (Run-Stop-Remote).

7) Remote two (2) wire start control.
8) Automatic engine shutdown.

l) The following set control indicator lamps shall be on a mounted control module.
1) Run.
2) Fault.
3) Overcrank.
4) Overspeed.
5) Switch Off.
6) Low Engine Temperature.
7) Low Oil Pressure.

3. Automatic transfer switch shall be manufactured by the same engine/generator set manufacture and include as a minimum the following.
a) Switch shall be rated for.
1) Continuous operation over an ambient temperature range of -25º to 125 º Fahrenheit.
2) All classes of load, both inductive and noninductive at 600 volts and tungsten lamp loads at 250 volts.
3) To close on an inrush current up to and including 20 times the continuous rating of the switch without welding or excessive burning of the contacts.
4) To switch loads up to and including its interrupting current capacity.
5) To endure 6,000 cycles of operation at rated current at a rate of 6 cycles per minute without failure; one cycle shall consist of one complete opening and closing of both sets of contacts on an inrush current 10 times the continuous rating of the switch.
b) Switch shall have the following mechanical characteristics.
1) Terminal lugs for either copper or aluminum wire with cadmium oxide contacts.
2) Mechanical and electrical interlocks to prevent simultaneous energizing of both normal and emergency services.
3) Mechanically held on both normal and emergency sides.
4) 3-pole with solid neutral
5) 25-amp rated auxiliary contacts, two (2) on the line side, three (3) on the emergency side.

c) Switch shall have the following control logic.
   1) Signals engine/generator set to start in the event of a power interruption. A solid state time delay start shall be provided adjustable from 0 to 6 seconds.
   2) Monitors each ungrounded line with an adjustable voltage, solid state under voltage sensor to sense a decrease of voltage below a set point or a loss of voltage on any phase of the normal power source.
   3) Retransfers the load to the line after normal power restoration.
   4) Signals engine/generator set to stop after load retransfer to normal source.
   5) Provides a battery float charger to maintain fully charged cranking batteries.
   6) Provides test switch to simulate an interruption of power from the normal source.
   7) Provides an exerciser clock and selector switch (Load/Without Load) to automatically start the engine/generator set at regular intervals and allows it to run for a preset time period with load or without load.

d) Indicating lamps and meters shall be mounted for easy reading without opening doors.
   1) Indicating lamps shall include Green lamp (normal) and Red lamp (emergency) to indicate which source is supplying power to the load.
   2) Meter shall include Charge Meter to monitor battery charger output current.

e) The complete automatic transfer switch shall be mounted in a NEMA 1 rated enclosure, installed within the backup power system enclosure and wired to the engine/generator set at the manufacturer's facility.

<u>Acceptable Manufacturer</u>
1. Precision Systems.
2. Other Approved.

6.04 Telemetry

A. General

1. The lift station shall be equipped with a functioning radio-based telemetry system that is compatible with the existing CCWA Wastewater SCADA system.

2. The central computer system (CS) for the CCWA Wastewater SCADA system is situated at the CCWA facility located at 8890 Roberts Road in Jonesboro, Clayton County.

3. The lift station SCADA system design shall be completed in two (2) phases.

   A. Phase One. A radio survey shall be performed to determine the feasibility and scope of the radio communication path from the CS to the Lift Station site. The radio survey shall be submitted to and approved by the CCWA prior to CCWA approval of the development's proposed sewer system design.

      Acceptable Supplier
      1. Industrial Control Systems, Inc., Sandston, Virginia (804) 737-1700.
      2. Bristol Babcock, Inc., Altamonte Springs, Florida (860) 945-2200.
      3. Whitaker Electric Company, Inc., Appling, Georgia (706) 556-9692.
      4. Other Approved.

   B. Phase Two. One Process Instrumentation and Control System Supplier shall provide a complete SCADA system including but not limited to a remote telemetry unit (RTU), radio communication equipment, and necessary accessories. The system supplier shall provide all necessary hardware modifications and software programming of all computers and RTUs associated with SCADA system including necessary program modifications at the CS.

      Acceptable Supplier
      1. Industrial Control Systems, Inc., Sandston, Virginia (804) 737-1700.
      2. Curry Control Company, Lakeland, Florida (863) 646-5781.
      3. Other Approved.

B. Radio Survey – Phase One

1. Complete a radio survey to determine communication path from central CCWA SCADA system to lift station site. Coordinate site activities with the CCWA.
   a) Record coordinates at each site and identify their specific location on topography mapping software.
   b) Generate terrain and radio path analysis profiles. Profiles shall be used to calculate the line-of-site radio path between the desired locations including projected tower height. Profiles shall then be used to identify potential interference and/or the feasibility of each potential radio path.

2. Transmit controlled radio signals between potential sites of interest and measure the quality and strength of the received signal. Use the specific radio to be used in the actual application using the same power level that will be used under normal operating conditions.

3. Provide results of radio survey and recommendations in the form of a report to the CCWA for review. Include the following items (as a minimum) in the report.
   a) Topographic map showing central CCWA SCADA system site, proposed lift station site and radio path including repeaters (if necessary).
   b) Test Methods.
   c) Site Coordinates.
   d) Test Equipment and Recommendations.
   e) Radio Paths Measured.
   f) Antenna Height Recommendations
   g) System Recommendation

4. The CCWA shall approve the radio survey's results and recommendations prior to proceeding with the design of the lift station SCADA system.

C. Remote Telemetry Unit – Phase Two

1. Remote Telemetry Unit (RTU) shall provide the interface between field signals and the CS. The RTU shall distribute communication, acquire data and control functions for the SCADA system. The following is a minimal list of functions required to be monitored; more functions may be required (i.e. for series staged station) or at the discretion of the CCWA.
   a) Generator Fail: Alarm if the generator is in a failed condition.
   b) Pumps 1 and 2 Run Status: Display the pump ON or OFF status. Calculate the pump elapsed runtime. Allow the runtime to be manually reset at the operator workstation.
   c) Pumps 1 and 2 Remote Run/Stop: Provide for the pump to be remotely started and stopped. The remote start and stop function shall operate only in the pump local selector switch is in the AUTO position.
   d) Pumps 1 and 2 High Temperature: Alarm on pump high temperature.
   e) Pumps 1 and 2 Pressure: Display continuous pump suction and discharge pressures.
   f) Lift Station Level: Display continuous lift station wet well liquid level. Alarm on Low Level in wet well (Less than 4.25mA dc signal).
   g) High Water Level Alarm: Display if the High Water Level switch is activated.
   h) RTU Power Monitoring: Alarm on AC power failure or Low Battery Power.

2. Performance.
   a) RTU shall operate as a subordinate to the CS. RTU shall have all data acquisition, communication and control function necessary to interface with CS.
   b) RTU shall support full or partial scan by the CS.
   c) Data acquisition functions shall include but are not limited to the following.
      1) RTU shall scan all input points at least every second for current value.
      2) Store in buffer memory: currents values of all I/O, pulse input accumulations and filtered values of analog inputs.
      3) RTU response to interrogations shall use the buffer memory contents.
   d) All analog inputs have first order exponential digital filtering with programmable filter constants downloaded from the CS.
      1) Default values for filter constants stored in ROM.

2) Filter constants expressed as time constants, range from 10 to 100 seconds with corresponding sample intervals ranging from 1 to 10 seconds.
3) As a minimum, filter constants individually adjustable by RTU.
4) Individual filter constants not required per analog input point.

e) RTU shall utilize real-time, multitasking firmware to implement system communication protocol, local data acquisition and control functions.
1) Shutdown due to loss of power shall not result in the loss of programs.
2) Startup after restoration of power shall not require manual or CS intervention.
3) Upon startup, RTU shall configure itself for its connected inputs and outputs and use default values for all initializations. RTU shall indicate its power reset condition to the CS in its reply to the first scan after reset. The CS shall then download all revised initialization constants. Firmware design utilizes a watchdog timer to monitor proper operation.

f) All integrated circuits are second sourced.

3. Interfaces
a) Types
1) With communication circuits to the CS.
2) With lift station input and output signals.
3) With power source.

b) RTU shall use a radio communication link utilizing a modem suitable for interface with the radio. Radio shall operate at a 9,600 baud with characteristics to match limitations of the radio channel. The RTU communicates with the CS at 9,600 baud in a asynchronous or synchronous format in a half-duplex mode over a party line channel.

c) Input/Output
1) All Input/Output (I/O) points shall be in accordance with ANSI C37.90.
2) Discrete Inputs (DI) shall be external with normally open or normally closed contacts. RTU impresses a dc voltage on the contact to read their status. Internal RTU logic optically isolated from external contacts. Provide means to limit read current to 100 mA maximum.

Noise filters or other techniques shall be utilized to reject short time constant noise, contact bounce and 60-Hz pickup.

3) Analog Inputs (AI) shall be 4 to 20 mA dc signals in accordance with ISA S50.1 and be fully isolated with a maximum impedance of 250 ohms. Accuracy shall be +/- 0.25% of full scale under all operating temperature conditions. Common mode rejection is at a 100 dB minimum. Normal mode noise rejection is at a 40 dB minimum for frequencies of 60Hz and above.
4) Discrete Outputs (DO) shall have interposing relays with SPDT contact. Relays shall have a 5-amp rating and suited for 100,000 operations at 25º C. DO shall be Latch Type or Momentary Type. Latch Type Output shall not change state on loss of power by RTU. Momentary Type Output shall be single pulse with an adjustable duration ranging from 0.2 to 2 seconds.
5) Analog Outputs (AO) shall be 4 to 20 mA dc signals in accordance with ISA S50.1, Type 2, Class L and be fully isolated. Accuracy shall be +/- 0.25% of full scale under all operating temperature conditions. Resolution shall be 0.1% of full scale or better.

d) Power
1) RTU shall operate on 117-volt rms. The RTU shall have internal power On/Off switch and an On status LED.
2) Power supply shall have an ac/dc converter, a battery charger and dc/dc converters. Power supply shall trickle charge battery when ac power is On and fail over to battery when ac power is Off.
3) Provide batteries sufficient to power RTU for a minimum of four (4) hours after loss of 117-volt ac power. Battery shall be of the sealed lead acid/calcium gelled electrolyte maintenance free type with rated trickle charge life in excess of two (2) years.
4) RTU shall have an ac power fail detection circuit relay. A Discrete Input shall be created upon detection of an ac power failure.

<u>Acceptable Manufacturer – Product</u>

1. Allen Bradley – Micrologix 1500.
2. Other Approved.

D. Panel Fabrication – Phase Two

1. Panel including all components (i.e. instruments, wiring and enclosure) shall be fabricated at the Process Instrumentation and Control System Supplier's factory.
2. Provide temperature control as follows.
   a) Panel shall be sized to adequately dissipate heat from components mounted inside panel or in panel face.
   b) Panel shall have thermostatically controlled space heater to maintain internal panel temperature above dew point.
3. Provide electrical as follows.
   a) Feeder circuits.
      1) One or more 120V ac, 60Hz.
      2) Provide for feeder circuit conduit entry.
      3) Provide terminal board for termination of wires.
   b) Panel Power.
      1) Provide main circuit breaker and a circuit breaker on each individual branch circuit distributed from panel.
      2) Branch circuit shall blow only branch breaker and not trip main breaker.
      3) Breakers shall be located to provide clear view and accessibility when panel door is opened.
   c) Circuit Wiring.
      1) A maximum of 20 devices shall be on a single circuit.
      2) Multiple units shall perform parallel operations.
      3) Provide for panel lighting and service duplex outlet on separate 15-amp 120V ac branch circuit.
   d) Signal Distribution.
      1) 4 to 20 mA dc signals may be distributed as 1 to 5V dc within panel.
      2) 4 to 20 mA dc signals shall be isolated outside panel.
      3) Signal wiring shall be twisted, shielded pairs.
   e) Signal Switching.
      1) Use dry circuit type relays or switches.
      2) 4 to 20 mA loops shall not be interrupted during switching.
   f) Relays.
      1) General: Plug-in type socket to rail mounting.
      2) General: Provide dust cover and hold-down clips with relay enclosure.

3) Signal switch relay with gold or silver contact material having an expected mechanical life of 10,000,000 operations and expected electrical life at rated load of 100,000 operations with an LED or neon indicator lamp.
4) Control circuit switch relay (non-latching) with silver cadmium oxide alloy contact having an expected mechanical life of 10,000,000 operations and expected electrical life at rated load of 100,000 operations with an LED or neon indicator lamp and push-to-test button.
5) Control circuit switch relay (latching) with silver cadmium oxide alloy contact having an expected mechanical life of 500,000 operations and expected electrical life at rated load of 50,000 operations with an LED or neon indicator lamp.
6) Control circuit switch relay (time delay) with silver cadmium oxide alloy contact having time delay set point and mode of operation with an integral potentiometer adjustment with knob external to dust cover.

Acceptable Manufacturer
1. Potter and Brumfield.
2. Allen Bradley.
3. Other Approved.

g) Power supply.
   1) Provide as required to power instruments requiring external dc power including two-wire transmitters and dc relays.
   2) Convert 120V ac, 60Hz power to dc power of appropriate voltage so that instruments will operate within required tolerances.
   3) Provide output over voltage and over current protection devices.
   4) Enclosure shall be NEMA 1 rated.
   5) dc supply line to each individual two-wire transmitted shall be fitted with an indicating type fuse mounted for easy replacement.
h) Internal Light and Service Outlet.
   1) Provide 100-watt incandescent light operated by switch.
   2) Mount inside and in the top of back of panel.
   3) Provide protective metal shield for light.
   4) Provide three-wire, 120V, 15 amp duplex receptacle.

i) Use following table for standard pushbutton colors and inscriptions. Use black colored lettering on white and yellow buttons. Use white colored lettering on black, red and green buttons.

Tag Function	Inscription	Color
O/O	On/Off	Red/Green
O/C	Open/Close	Red/Green
O/C/A	Open/Close/Auto	Red/Green/White
O/O/A	On/Off/Auto	Red/Green/White
M/A	Manual/Auto	Yellow/White
S/S	Start/Stop	Red/Green
Reset	Reset	Red
Emergency Stop	Emergency Stop	Red

j) Use following table for standard light colors and inscriptions. Use black colored lettering on white and amber lenses. Use white colored lettering on red and green lenses.

Tag Function	Inscription	Color
On	On	Red
Off	Off	Green
Open	Open	Red
Closed	Closed	Green
Low	Low	Green
Fail	Fail	Amber
High	High	Red
Auto	Auto	White
Manual	Manual	Amber
Local	Local	White
Remote	Remote	Amber

4. Panel enclosure shall be as follows.
   a) NEMA 4X rated and constructed of a minimum 14-gauge Type 316 stainless steel. Size shall be 36”H x 36”W x 12”D.

b) Enclosure shall have a rubber-gasketed door with a continuous hinge. Door shall be secured to enclosure with stainless steel lockable quick-release clamps.

Acceptable Manufacturer
1. Hoffman Engineering Co.
2. Other Approved.

E. Radio Communication Equipment – Phase Two

1. Transceiver
   a) Transceiver shall contain FM transmitter and FM receiver suitable for operation in the 902 – 928 MHz spread spectrum band.
   b) Transceiver shall operate from power provided by the RTU; provide solid-state circuitry throughout.
   c) Designate transmitter emission in accordance with FCC Rules and Regulations.

   Acceptable Manufacturer – Product
   1. Microwave Data Systems – Model 9810, 902-928 MHz Spread Spectrum.
   2. Other Approved.

2. Transmission Cable
   a) Cable shall have performance characteristics suited for overall system functional requirements.
   b) Cable shall have a minimum bend radius of 10 inches
   c) Cable shall have a dielectric jacket and be suited for direct burial and other outdoor design environments.

   Acceptable Manufacturer – Product
   1. Heliax – Model LDF.
   2. Other Approved.

3) Antenna
   a) Antenna shall be suited for outdoor environments.
   b) Antenna shall provide a low resistance dc path to ground for lightning protection.

   Acceptable Manufacturer – Product
   1. Omni (Decibel Products) – Model DB586, 6dB Omnidirectional Antenna.
   2. Yagi (MaxRad) – Model MYG303-ED, 6dB Yagi Antenna.
   3. Other Approved.

4) Tower and Mast
   a) Tower and mast shall support antenna at an elevation to achieve functional requirements.
   b) Tower shall be self-supporting (without guide wires).
   c) Lightning arrestors shall be provided and connected to ground rods by cable.
   d) Use Detail No. 25.3 when applicable. Provide “as required” dimensions.

   Acceptable Manufacturer
   1. Pirod / Valmont.
   2. Rohn Industries.
   3. Other Approved.

6.05 Wet Well

A. A wet well shall be provided with each lift station. Wet well shall have a minimum 6-foot inside diameter (or equivalent rectangular area).

B. Wet well shall be sized in conjunction with pump level control to provide 2 to 5 pump cycles per hour at average daily flow conditions.

   1. Wet well shall resist floatation during construction.

   2. Access to the wet well shall be provided via a 2-foot diameter manhole ring and light weight cover situated two (2) feet centered from inside edge of wet well.

C. Use Detail No. 25.1 when applicable.

6.06 Equipment Pads

A. Lift station shall be secured by expansion or cast-in anchors to a monolithically poured steel reinforced concrete slab. The slab shall have a minimum depth of eight (8) inches. The slab shall extend a minimum of two (2) feet beyond the outside edges of the wet well and a minimum of three (3) feet beyond the edges of the lift station enclosure.

B. Backup power system shall be secured by expansion or cast-in anchors to a monolithically poured steel reinforced concrete slab. The slab shall have a minimum depth of eight (8) inches. The slab shall extend a minimum of six (6) inches beyond all sides of enclosure.

6.07 General Electrical Requirements

A. Electrical service to lift station site area shall be 3-phase, AC current.

B. Service Entrance, main disconnect, mini-power center and SCADA panel shall be secured to a fabricated steel (galvanized) stand.

C. Service entrance shall meet the requirements of the local electric utility.

D. Main Disconnect and mini-power center shall be sized to meet NEC code.

E. Service wire to all components shall be stranded copper cable sized to meet NEC code and placed in conduit. Service wire within fenced site area shall be underground except where entering equipment.

1. Below grade conduit shall be rigid, schedule 40, PVC meeting requirements of NEMA TC-3 and UL 651. Joints shall be slip-on and glued in accordance with manufacturers instructions.

2. At-grade, above-grade and/or concrete encased conduit shall be rigid galvanized steel meeting the requirements of ANSI C80.1 and UL 6. Joints

shall be threaded with galvanized fittings meeting the requirements of UL 514B. Set screw and threadless compression fittings shall not be permitted.

3. At-grade or above-grade conduit shall not have horizontal runs greater than 12 inches. Horizontal runs of conduit shall be supported by a minimum of two concrete anchored uni-strut (galvanized).

F. Area security light shall consist of a photocell having a minimum 150 watt metal halide fixture. The light shall be installed at a minimum height of 15 feet above finished grade. The light pole shall be tubular steel and factory finished with a dark bronze color coating. The light pole shall be anchored in accordance with the manufacturer's recommendations.

G. All components shall be grounded to copper grounding rods in accordance with NEC code.

1. Ground rods shall be copper-clad having minimum diameter of 5/8-inch with a length of 10 feet.

2. Ground conductors shall be stranded copper.

3. Ground connections shall be of the exothermic weld type suitable for exposure to elements or direct burial.

H. Provide electrical site plan with design submittal.

I. Use Detail No. 25.5 when applicable.

6.08 Property and Site Area

A. A minimum 60-foot by 60-foot area of property, to be donated to the CCWA, shall be provided for each lift station. The lift station and associated components shall be situated within 40-foot by 40-foot site area; a larger property/site area may be required.

B. A 12 (twelve) foot wide access drive situated within a 20 foot wide strip of property, to be donated to the CCWA, shall be provided for each lift station. The access drive shall intersect a public right-of-way. Road material may be changed as approved by the CCWA Engineer.

C. The property boundary shall be situated no closer than fifty (50) feet from the nearest structure.

D. Corners of lift station site area shall be at same elevation.

E. Lift station site area shall be sloped away from slab covering the wet well at a minimum 1.0% slope.

F. Potable water and a non-freeze yard hydrant shall be provided at each lift station.

G. Provide plug valve in force main at a maximum distance of 20 feet from lift station.

H. Site area (minimum 40-foot by 40-foot) shall be fenced.

I. That portion of the lift station site area not in concrete shall be covered with stone (size R2) at a minimum depth of six (6) inches. Stone shall be placed atop a geotextile fabric liner.

J. Property area outside fenced area shall be landscaped.

K. Use Detail Nos. 25.7 and 25.8 when applicable.

6.09 Fence and Landscaping

A. A minimum 5-foot clearance shall be provided from fence to major components (i.e. lift station, generator, SCADA tower, electrical stand)

B. Fence shall have height of six (6) feet with three (3) stands of galvanized barbed wire atop posts.

1. Fence mesh shall be 9-gauge wire (galvanized).

2. Top rail shall be 1-5/8 inch diameter schedule SS40.

3. Intermediate post shall be 2-inch diameter schedule SS40.

4. Corner and gate posts shall be 3-inch minimum diameter schedule SS40.

5. Gate shall have a width of twelve (12) feet, two 6-foot swing gates positioned in location approved by the CCWA.

6. Gate shall be secured by the CCWA with a keyed lock conforming to the CCWA standard; and

7. “No Trespassing” signs to include lift station name, address and emergency phone numbers shall be installed on all fenced sides by the CCWA conforming to the CCWA standard.

C. Property outside of the fenced area shall be landscaped.

1. Install weed barrier fabric over all areas to receive landscaping.

2. Install evergreen shrubbery spaced not greater than five (5) feet apart around the fenced area. Shrubbery shall have a minimum height of three (3) feet at the time of planting and shall have a mature height of at least six (6) feet. Prepare soil in accordance with shrubbery planting instructions.

3. Install wood mulch, clean of dirt, around shrubbery and to the edge of the easement area. Mulch shall have a depth of three (3) inches.

D. Use Detail Nos. 26.1 and 27.1 when applicable.

1.01 Pipe Classification

A. Ductile iron (push-on) pipe four (4) inches and six (6) inches in diameter shall be Class 51 in accordance with ANSI/AWWA C151/A21.51, latest revisions.

B. Ductile iron (push-on) pipe eight (8) inches in diameter and larger shall be Class 50, unless noted otherwise, in accordance with ANSI/AWWA C151/A21.51, latest revisions.

C. Ductile iron flanged pipe shall have a minimum pressure rating of 250 psi in accordance with ANSI/AWWA C110/A21.10 and C115/A21.15, latest revisions.

D. Ductile iron restrained-joint pipe shall be of the flex-ring type having a welded bead lock ring having a minimum pressure rating of 250 psi in accordance with ANSI/AWWA C110/A21.10 and C151/A21.51, latest revisions.

1.02 Fitting Classification

A. Ductile iron fittings for use with push-on joint pipe shall be standard mechanical, compact series, with a minimum pressure rating of 250 psi in accordance with ANSI/AWWA C110/A21.10 and C153/A21.53, latest revisions.

B. Ductile iron flanged fittings shall be in accordance with ANSI/AWWA C110/A21.10, latest revision. Flanged fittings up to twelve (12) inches in size shall have a minimum pressure rating of 350 psi. Flanged fittings over twelve (12) inches in size shall have a minimum pressure rating of 250 psi.

C. Ductile iron restrained-joint fittings shall be of the flex-ring type having a minimum pressure rating of 250 psi in accordance with ANSI/AWWA C110/A21.10 and C153/A21.53, latest revisions.

1.03 Gaskets and Bolted Connections

A. Gaskets shall be as follows.

1. Gaskets for push-on and standard mechanical joints shall be plain rubber (Styrene Butadiene Copolymer) in accordance with ANSI/AWWA C111/A21.11, latest revisions.

2. Gaskets (FIELD LOK®) and (MJ FIELD LOK®) used to restrain push-on joint pipe and/or standard mechanical joint fittings, respectively, shall be plain rubber (Styrene Butadiene Copolymer) modified with stainless steel teeth in accordance with ANSI/AWWA C111/A21.11, latest revisions.

3. Gaskets for restrained joint pipe of the flex-ring type and restrained joint fittings of the flex-ring type shall be plain rubber (Styrene Butadiene Copolymer) modified with ductile iron segments in accordance with ANSI/AWWA C111/A21.11, latest revisions.

4. Gaskets for flanged joints shall be 1/8-inch thick, full-faced, clothed reinforced rubber in accordance with ANSI/AWWA C110/A21.10 and C115/A21.15, latest revisions.

B. Retaining glands and adapter coupling shall be as follows.

1. Retaining gland for use with standard mechanical joint fitting where joint restraint is not required shall be in accordance with ANSI/AWWA C110/A21.10 through C153/A21.53, latest revisions.

2. Retaining gland (MEGALUG®) for use with standard mechanical joint fitting, where the gland acts as the restraining mechanism, shall include gripping wedges with torque limiting twist-off nuts and shall be in accordance with ANSI/AWWA C110/A21.10 through C153/A21.53, latest revisions.

3. Retaining gland (MJ FIELD LOK®) for use with standard mechanical joint fitting, where the gasket acts as the restraining mechanism, shall be in accordance with ANSI/AWWA C110/A21.10 through C153/A21.53, latest revisions.

4. Adapter coupling (Foster Adapter®) shall be a bolt-through positive restraining connector between two standard mechanical joints. Adapter coupling shall be in accordance with ANSI/AWWA C153/A21.53, latest revisions.

C. Bolts shall be as follows.

1. Bolts and nuts used for standard mechanical connections shall be tee head type with heavy hex nut conforming to ASTM A563 in accordance with AWWA C111.

2. Bolts and nuts used for flanged connections shall be hex type of low carbon steel, cadmium plated or zinc plated conforming to ASTM A307 in accordance with AWWA C110 and C115.

1.04 Coatings and Linings

A. Ductile iron pipe and fittings placed on or beneath the ground surface shall have an exterior coating of asphalt (one mil) in accordance with ANSI/AWWA C151/A21.10, latest revisions.

B. Ductile iron pipe and fittings placed above the ground surface shall have an exterior manufacturer applied universal phenolic primer (one mil) capable of accepting an epoxy coating. Finish coat shall be in accordance with Division III, Section 12.

C. Ductile iron pipe that crosses or runs parallel to a gas transmission main, which is or may be catholically protected, shall be encased in polyethylene tubing, eight (8) mil minimum thickness, and taped in accordance with ANSI/AWWA C105/A21.5.

D. Ductile iron pipe and fittings used in the distribution of potable water shall be cement lined in accordance with ANSI/AWWA C104/A21.4, latest revisions.

E. Ductile iron pipe and fittings used in sanitary sewer systems shall be cement lined in accordance with ANSI/AWWA C104/A21.4, latest revision and cement lining sealed with asphalt in accordance with ANSI 21.10, latest revision and AWWA C110, C115, C151 or C153, latest revisions.

F. Ductile iron fittings in lieu of an asphalt coating and cement lining may be coated and lined with five (5) to eight (8) mils of fusion bonded epoxy in accordance with AWWA/ANSI C550 and C121/A21.16. Fittings shall be listed by a certifying agency that the coating complies with ANSI/NSF 61.

1.05 Pipe Marking

The following information shall be cast in or stamped on each pipe.

A. Weight, class or nominal thickness.
B. Casting period.
C. Manufacturer's identifying mark.
D. Year the pipe was manufactured.
E. The letters "DI" or "DUCTILE".

<u>Acceptable Manufacturers - Product</u>
Ductile iron pipe and fittings shall be domestically manufactured.

1. American Cast Iron Pipe Company – pipe and fittings.
2. U.S. Pipe Company – pipe and fittings.
3. S&B Technical Products - FIELD LOK® and MJ FIELD LOK® gasket.
4. EBAA Iron Sales, Inc. - MEGALUG® gland.
5. U.S. Pipe Company, Tyler/Union - MJ FIELD LOK® gland.
6. Infact Corporation - Foster Adapter®.
7. Other Approved.

2.01 Pipe Classification.

A. Steel pipe shall have a minimum wall thickness of 0.25 inches and be in accordance with ASI standards.

B. Wall thickness shall be increased as necessary to minimize deflection and deformation.

2.02 Transition Coupling

Coupling used to connect pipes of differing material shall be as follows.

A. Middle ring shall be carbon steel in accordance with ASTM A513, ASTM A635 or ASME SA675 GR60.

B. Followers shall be ductile iron.

C. Bolts and nuts shall be carbon steel in accordance with ANSI/AWWA C111/A21.11.

D. Gaskets shall be Buna (S blend).

2.03 Coatings and Linings

A. Steel pipe used for water distribution and sewer shall be coated and lined in accordance with Division III, Section 12.

B. Steel pipe used as casing shall not require a coating or lining unless otherwise indicated.

<u>Acceptable Manufacturers - Product</u>
Steel pipe and fittings shall be domestically manufactured.

1. As approved – pipe.
2. Dresser – Transition Coupling.
3. Smith Blair – Transition Coupling.
4. Other Approved.

3.01 Pipe Classification

A. Buried service three-quarter (¾) inches in diameter to one (1) inch in diameter shall be seamless, annealed copper tube conforming to the requirements of ASTM B-88, Type "K".

B. Buried service greater than one (1) inch in diameter shall be hard-drawn copper tube conforming to the requirements of ASTM B-88, Type "L".

C. All exposed or above-ground service shall be hard-drawn copper tube conforming to the requirements of ASTM B-88, Type "L".

3.02 Fittings

A. Fittings for annealed copper tube, Type "K", shall be brass flared type conforming to ASTM B-16 or B-124.

B. Fittings for hard-drawn copper tube, Type "L", shall be wrought copper conforming to ASTM B-75 and ANSI B16.22 for silver brazed joints. Lead free solder and flux shall be used in making connections.

C. Meter couplings and tail pieces shall be cast brass threaded type.

<u>Acceptable Manufacturers</u>
Copper components shall be domestically manufactured.
1. As Approved.

4.01 Casing for Copper Pipe

A. PVC pipe shall be used as a casing for copper water service lines that are to be installed under pavement.

B. PVC pipe used as a casing shall be a minimum of Schedule 40, Class 200.

C. PVC casing pipe shall have a minimum diameter of two (2) inches.

4.02 Sewer Pipe Classification

A. PVC pipe used as sewer shall be SDR 26 push-on joint type with O-rings in accordance with ASTM 3034.

B. Gaskets shall be plain rubber.

4.03 Sewer Pipe Fitting Classification

PVC fittings shall be in accordance with ASTM 3034.

<u>Acceptable Manufacturers</u>
PVC pipe shall be domestically manufactured.
1. As Approved.

5.01 Gate Valve

A. Gate valves three (3) inches in diameter and smaller shall be as follows.

1. Valves shall be all brass or bronze construction.

2. Valves shall have solid wedge gate, rising stem, and threaded bonnet.

3. Valve end connections shall be compatible with pipe material in which valve is installed.

B. Gate valves four (4) inches in diameter and larger shall be as follows.

1. Water supply service shall be in accordance with AWWA 509 for resilient seated valves.

2. Water supply service shall be in accordance with AWWA 515 for reduced wall thickness resilient seated valves.

3. Valve body shall be ductile iron with all exterior surfaces coated with a fusion-bonded epoxy coating.

4. Valves shall be bronze mounted, beveled geared, with a non-rising stem and O-ring stem seals.

5. All exposed fasteners, nuts and bolts shall be stainless steel.

6. Valves shall open in a counter-clockwise direction.

7. Valve end connections shall be flanged or standard mechanical.

8. Buried valves shall be nut operated; non-buried valves shall have hand-wheel operators.

C. Gate valves used in conjunction with a tapping saddle shall be as follows:

1. Offset type that allows the tapping device to mount to the pipe and pass through the opened valve.

2. End connection to the tapping sleeve shall be flanged. End connection to accept pipe shall be mechanical joint.

D. Gate valves four (4) inches and larger shall be coated with six (6) to eight (8) mils of fusion bonded epoxy in accordance with AWWA/ANSI C550 and C121/A21.16. Fittings shall be listed by a certifying agency that the coating complies with ANSI/NSF 61.

E. The following information shall be cast in or stamped on each gate valve.

1. Manufacturer's identifying mark.
2. Pressure Class.
3. The letters "DI" or DUCTILE.
4. Place of Manufacturing.

<u>Acceptable Manufacturers</u>
Valves shall be by a domestic manufacturer that produces only ductile iron bodied valves.

1. American Darling.
2. U.S. Pipe Company.
3. Mueller Company - Ductile Iron Valves only.
4. M&H Valve Company - Ductile Iron Valves only.

5.02 Butterfly Valve

A. Valves shall be in accordance with AWWA C504.

B. Materials used in the fabrication of the valve shall meet all related requirements of ASTM.

C. Valve bodies shall be ductile iron with integrally cast flanged ends or standard mechanical ends. Flange drilling shall be in accordance with ANSI B16.1. Two trunnions for shaft bearings shall be integrally cast with valve body.

D. Valves shall be bubble tight at rated pressures with flow in either direction and shall be capable of throttling service.

E. Valve disc shall rotate 90º from full open position to tight shut position.

F. Valves shall be tight closing, rubber seated with seats applied to the body or disc. Valve seats on 30 inch and larger diameter valves shall be field adjustable and replaceable without dismounting operator, disc or shaft and without removing valve from pipe. Mating seat shall be stainless steel or Monel.

G. Valves shall be fitted with sleeve type bearings contained in hubs of valve body. Bearings shall be corrosion resistant and self-lubricating.

H. Valve operators shall hold valve in any intermediate position between full open and full close without creeping or fluttering.

   1. Manual operators shall be worm gear or traveling nut type and shall be fully enclosed.

   2. Valves for buried service shall be furnished with a ground level valve position indicator unless otherwise approved by the CCWA Engineer.

   3. Valves for above ground service shall be furnished with a valve position indicator arrow to give valve position at any point from full open to full close.

4. Valves shall open when turning operator in a counter-clockwise direction.

I. Valves shall be coated as follows.

1. Valve placed on or beneath the ground surface shall have an exterior coating of asphalt (one mil) in accordance with ANSI/AWWA C151/A21.10, latest revisions.

2. Valve in lieu of an asphalt coating may be coated with six (6) to eight (8) mils of fusion bonded epoxy in accordance with AWWA/ANSI C550 and C121/A21.16.

3. Valve placed above the ground surface shall have an exterior manufacturer applied universal phenolic primer (one mil) capable of accepting an epoxy coating. Finish coat shall be in accordance with Division III, Section 12.

<u>Acceptable Manufacturers</u>

1. M&H.
2. Pratt
3. Other Approved.

5.03 Double Check Valve

A. Double check valves shall be in accordance with AWWA 506, ASSE 1013 and USC-FCCC. Check valves shall be UL listed and approved by FMR.

B. Double check valves ¾ inch in diameter through two (2) inches in diameter shall be bronze bodied having corrosion resistant moving parts with bronze threaded unions on both sides of the device.

C. Double check valves 2-1/2 inch in diameter and larger shall be bronze, cast iron or ductile iron bodied having corrosion resistant moving parts with flanged end connections.

D. Double check valves with reduced pressure zone assemblies shall have a sufficient air gap at the relief port and discharge shall drain away from the assembly.

E. Double check valve assemblies shall be equipped as standard with four (4) test cocks and two (2) resilient seated shut off valves.

F. Valve may be coated with six (6) to eight (8) mils of fusion bonded epoxy in accordance with AWWA/ANSI C550 and C121/A21.16.

G. Valve may have an exterior manufacturer applied universal phenolic primer (one mil) capable of accepting an epoxy coating. Finish coat shall be in accordance with Division III, Section 12.

<u>Acceptable Manufacturers – Product</u>

1. Watts - Double Check (3/4” to 2”): U007QT.
2. Watts - Double Check (3” to 10”): 709 or 757 w/OSY Valves.
3. Wilkins - Double Check (3” to 10”): 350A or 950 w/OSY Valves.
4. Conbraco/Apollo – Double Check (3/4” to 2”): 40-100 T Series.
5. Conbraco/Apollo – Double Check (3” to 10”): 4S DC Series w/OSY Valves.
6. Conbraco/Apollo – Double Check (3” to 10”): 4D-100 Defender w/OSY Valves.
7. Watts - Reduced Pressure Zone Check Valve (3/4” to 2”): 909S-QT.
8. Watts - Reduced Pressure Zone Check Valve (3” to 6”): 909 w/OSY Valves.
9. Wilkins - Reduced Pressure Zone Check Valve (3” to 6”): 375 or 975 w/OSY Valves.
10. Conbraco/Apollo – Reduced Pressure Zone (3/4” to 2”): 40-200 T Series.
11. Conbraco/Apollo – Reduced Pressure Zone (3” to 4”): 40-200 w/OSY Valves.
12. Conbraco/Apollo – Reduced Pressure Zone (6” to 10”): 4S-RP w/OSY Valves.
13. Other Approved.

5.04 Corporation Valve

A. Corporation valves shall be of the ball valve type and manufactured of bronze in conformance with ASTM B61, ASTM B62 and NSF 61.

B. Corporation valves shall withstand a working pressure of 150 psi.

C. Corporation valves shall have crosscut threading, for direct tap into pipe, and a flared copper outlet.

D. Corporation valves shall be ¾ inch or one (1) inch in size as required by the service.

Acceptable Manufacturers
Corporation valves shall be domestically manufactured.
1. Ford Meter Box Co.
2. Mueller Brass.
3. A.Y. McDonald Mfg.
4. Other Approved.

5.05 Curb Stop

A. Curb stops shall be of the ball valve type and manufactured of bronze in conformance with ASTM B61, ASTM B62 and NSF 61.

B. Curb stops shall withstand a working pressure of 150 psi.

C. The internal ball shall be manufactured of low carbon steel coated with brass.

D. Internal O-rings and seats shall be of Buna-N.

E. Curb stops shall be fitted with iron pipe threads on the influent side and flared copper on the discharge side.

F. Curb stops shall be fitted with wing locks suitable to accept a keyed padlock.

G. Curb stops shall be ¾ inch, one (1) inch or two (2) inches in size as required by the service.

Acceptable Manufacturers

Curb stops shall be domestically manufactured.

1. Ford Meter Box Co. for ¾ inch and 1 inch sizes.
2. Mueller Brass.
3. A.Y. McDonald Mfg.
4. Other Approved.

5.06 Plug Valve

A. Plug shall be as follows.

1. Eccentric plug (non-lubricated) having a standard port design.

2. Plug shall be cast iron in accordance with ASTM A126.

3. Plug shall have a resilient facing of carboxylic acrylonitrile butadiene or chloropene.

B. Valve shall be generally comprised as follows.

1. Body shall be cast iron, Class B, in accordance with ASTM A126.

2. Seat shall be nickel, raised and welded to the body.

3. Bearings shall be oil impregnated permanently lubricated stainless steel Type 316 in accordance with ASTM A743 Grade CF-8M.

4. Packing shall be acrylonitrile butadiene V-type.

C. End connections shall be as follows:

1. Non-buried service shall have flanged ends having an ANSI 125/150 pound rating standard face and drilled.

2. Buried service shall have standard mechanical joint ends in accordance with AWWA C111-64 with retaining gland that acts as a restraining mechanism.

D. Actuator type shall be as follows:

1. Non-buried service shall have G-series worm gear with 8-inch diameter hand wheel actuator input, clockwise to close.

2. Buried service shall have G-series worm gear for buried service, with 2-inch square nut actuator input, clockwise to close.

E. Valve interior and exterior surfaces shall have one (1) coat, 4 to 5 mils of TNEMEC 140 Pota-Pox Plus epoxy paint, surface preparation of SSPC-SP10.

Acceptable Manufacturers

1. Dezurik.
2. Other Approved.

5.07 Combination Air/Vacuum Release Valve

A. Valve shall automatically release large quantities of air during pipeline filling and automatically allow air to reenter the pipeline when internal pressure of the pipeline approaches a negative value (vacuum). Valve shall automatically release small quantities of air from the pipeline while under normal pressure conditions.

B. Valve shall be suitable for the respective service (water or sanitary sewer) having a working pressure of 150 psi and a test pressure of 225 psi.

C. Valve inlet and outlet shall be sized as required. Where the option permits, ANSI 125 lb. flanged connections shall be utilized.

D. Valve body, cover and baffle shall be cast iron, Class B in accordance with ASTM A126.

E. Seat and orifice button shall be Buna-N.

F. All internal components shall be stainless steel T304 in accordance with ASTM A240, A269, A276 and PH 15-7 MO.

Acceptable Manufacturers
Combination Air/Vacuum Release Valve shall be domestically manufactured.

1. Val-Matic Valve and Manufacturing Corp.
2. Other Approved.

5.08 Valve Box

A. Valve boxes shall be of the two-piece type and manufactured of cast iron.

B. Valve boxes shall have an internal diameter of 5.25 inches.

C. Valve boxes shall be fitted with a cast iron cover with the word “WATER” or “SEWER” integrally cast in the cover depending on the service.

Acceptable Manufacturers
1. Bingham-Taylor.
2. Other Approved.

6.01 Tapping Sleeve

A. Tapping sleeves shall be of the split type and manufactured of ductile iron or stainless steel (preferred). Stainless steel sleeve shall be used when tapping cast iron pipe. Ductile iron shall conform with ANSI/AWWA standards. Stainless Steel shall be type 304 (18-8).

B. Gaskets shall be virgin nitrile (Buna-N, NBR).

C. Sleeve outlet shall be flanged or mechanical joint in accordance with ANSI/AWWA C110/A21.1.

<u>Acceptable Manufacturers – Product</u>

1. U.S. Pipe – T28 on ductile iron main only.
2. Power Seal– Part No. 3490 (stainless steel) on cast iron and ductile iron mains.
3. Smith Blair – Part No. 663 or 665 (stainless steel) on cast iron and ductile iron mains.
4. Ford Meter Box– FTSS (stainless steel).
5. Romac for 1-1/2 inch and 2 inch taps.
6. Other Approved.

6.02 Tapping Saddle

A. Tapping saddles shall be stainless steel. Ductile iron shall conform with ANSI/AWWA standards. Stainless Steel shall be type 304 (18-8).

B. Stainless steel saddles shall be used when tapping for 1-1/2 inch or 2 inch service lines.

C. Tapping saddles shall seal with pipe by an O-ring gasket virgin nitrile (Buna-N, NBR).

D. Saddle outlet to pipe shall be flanged or tapped with pipe threads.

Acceptable Manufacturers - Product

1. Smith Blair - 313 with 015 stainless steel bales (4” to 16”) for 2” iron pipe threads.
2. Smith Blair - 366 with 015 stainless steel straps (18” to 40”) for 2” iron pipe threads.
3. Smith Blair – 372 for pipe diameters 4 inches through 12 inches.
4. Powerseal – 3412AS for pipe diameters 3 inches through 12 inches.
5. Powerseal – 3416AS for pipe diameters 14 inches through 36 inches.
6. Ford Meter Box– FS 303.
7. Romac - 306 for pipe diameters 3 inches through 12 inches.
8. Romac - 305 for pipe diameters 14 inches through 24 inches.
9. Other Approved.

7.01 Residential and Light Commercial

A. Water meters shall be positive displacement type with oscillating piston or rotating disk having a magnetic drive conforming to AWWA C-700 and a sealed register conforming to AWWA C-707.

B. Meters shall be capable of operating up to a working pressure of 150 psi and have an operating flow range shown on the following table.

SIZE (in)	OPERATING FLOW RANGE (gpm)	LOW FLOW REGISTRATION
5/8	0.25 to 25	98.5% at ¼ gpm
¾	0.75 to 35	97% at 3/8 gpm
1	1.25 to 70	95% at ¾ gpm
1-1/2	2.5 to 120	95% at 1-1/4 gpm
2	2.5 to 170	95% at 2 1/2 gpm

C. Meter outer case shall be constructed of Water Works bronze (minimum 75% copper content) and shall be split case. External fasteners shall be corrosion resistant.

D. The size of the meter and a flow direction arrow shall be cast in raised figures on the outer casing. The manufacturer's serial number shall be permanently affixed to the outer case and shall be visible from the topside.

E. The sealed register shall be of the straight reading type and have a full test dial on the face. The register shall be fitted with an external or internal locking device so that the register can only be removed with specialized tools.

F. Meters shall have a corrosion resistant strainer that is easily removed without the meter itself being disconnected from the service line.

G. The register shall measure flow in gallons and shall be read by visual inspection and remote data relay. The electronic register shall be provided to function with reading devices as manufactured by Itron, Inc.

H. Meter connections to 5/8 inch and one (1) inch service lines shall be with a meter spud. Meter connections to 1-1/2 inch and two (2) inch service lines shall be with a two (2) bolt flange.

Acceptable Manufacturers

1. Badger Meter, Inc.
2. Other Approved.

7.02 Commercial and Industrial

A. Water meters shall be Class I or II turbine type with magnetic drive, reduction gearing and straightening vanes conforming to AWWA C-700 and the register shall be permanently hermetically sealed conforming to AWWA C-707.

B. Meters shall be capable of operating up to a working pressure of 150 psi and have an operating flow range shown on the following table.

SIZE (in)	OPERATING FLOW RANGE (gpm)	LOW FLOW REGISTRATION
* 1-1/2	4 to 200	98.5% at 2.5 gpm
* 2	4 to 310	95% at 2.5 gpm
3	5 to 550	95% at 4 gpm
4	4 to 1,250	95% at 2.5 gpm
6	4 to 2,500	95% at 2.5 gpm
8	4 to 4,500	95% at 2.5 gpm
10	4 to 7,000	95% at 2.5 gpm

* For fire service in building and irrigation service only.

C. Meter outer case shall be constructed of Water Works bronze (minimum 75% copper content) and shall be split case. External fasteners shall be corrosion resistant.

D. The size and model of the meter and a flow direction arrow shall be cast in raised figures on both sides of the outer casing. The manufacturers serial number shall be permanently affixed to the outer case and shall be visible from the topside.

E. Meters shall have a separate measuring chamber that shall be easily removable from the outer case. The measuring chamber shall be constructed of Water Works bronze (minimum 85% copper content).

F. The register shall be of the straight reading type and have a full test dial on the face. The register shall be fitted with an external or internal locking device so that the register can only be removed with specialized tools.

G. The register shall measure flow in gallons and shall be read by visual inspection and remote data relay. The electronic register shall be provided to function with reading devices as manufactured by Itron, Inc.

H. The meter shall have internal straightening vanes installed on the meters inlet. The straightening vanes shall be easily removable. The straightening vanes shall not be cast as part of the main case or molded as part of the measuring chamber.

I. The meter shall be equipped with either an internal or external strainer as shown in the following table and detailed in items “K” and “L”.

METER STRAINER SIZE (in)	STRAINER CONFIGURATION
1-1/2 to 4	Internal with Test Port
1-1/2 to 4	External Bronze
6 to 10	External Ductile Iron/Cast Iron

J. Where meters are equipped with an internal strainer, the strainer shall be cast as part of the meter’s main case. The internal strainer screen and cover plate shall be located at the meter’s inlet between the inlet flange and measuring chamber. The internal strainer screen shall be of the V-shape design and externally accessible without disturbing the meter’s pipeline setting or measuring chamber assembly. A test port of adequate capacity shall be located on the meter’s main case adjacent to the outlet flange. The strainer shall be listed by UL and approved by FMR.

K. Where meters are equipped with an external strainer, the strainer and cover plate shall be located at the meter's inlet between the inlet flange and measuring chamber. The strainer screen shall be of the V-shape design and accessible without disturbing the meter's pipeline setting or measuring chamber assembly. The strainer shall be listed by UL and approved by FMR.

L. Meter connection to the service line shall be flanged, Class 125# and conform to ANSI 16.1 for diameter, drilling pattern and thickness. Where companion flanges are required, flanges shall be cast iron and tapped with American Standard internal taper pipe threads. Bolts, nuts and gaskets associated with companion flanges shall be provided for connection to the meter only.

Acceptable Manufacturers

1. Badger Meter, Inc.
2. Other Approved.

7.03 Fire Service

A. Water meters shall be Class II turbine type with magnetic drive, reduction gearing and straightening vanes conforming to AWWA C-703 and the register shall be permanently hermetically sealed conforming to AWWA C-707.

B. Meters shall be capable of operating up to a working pressure of 150 psi and have an operating flow range shown on the following table.

SIZE (in)	OPERATING FLOW RANGE (gpm)	LOW FLOW REGISTRATION
4	10 to 1,250	95% at 6 gpm
6	20 to 2,500	95% at 15 gpm
8	30 to 4,500	95% at 20 gpm
10	50 to 7,000	95% at 30 gpm

C. Meter outer case shall be constructed of Water Works bronze (minimum 75% copper content) and shall be split case. External fasteners shall be corrosion resistant.

D. The size and model of the meter and a flow direction arrow shall be cast in raised figures on both sides of the outer casing. The manufacturers serial number shall be permanently affixed to the outer case and shall be visible from the topside.

E. Meters shall have a separate measuring chamber that shall be easily removable from the outer case. The measuring chamber shall be constructed of Water Works bronze (minimum 85% copper content).

F. The register shall be of the straight reading type and have a full test dial on the face. The register shall be secured by means of a locking device located in the interior of the outer case so that the register can only be removed with specialized tools.

G. The register shall measure flow in gallons and shall be read by visual inspection and remote data relay. The electronic register shall be provided to function with reading devices as manufactured by Itron, Inc.

H. The meter shall have internal straightening vanes installed on the meters inlet. The straightening vanes shall be easily removable. The straightening vanes shall not be cast as part of the main case or molded as part of the measuring chamber.

I. The meter shall be equipped with an external strainer as listed by UL and approved by FMR. The strainer assembly shall be ductile iron and located upstream of the meter's inlet flange. The strainer screen shall be stainless steel and V-shape design. The strainer screen shall have a net open area at least four (4) times that of the pipe opening. The strainer screen shall be accessible without disturbing the meter's pipeline setting or measuring chamber assembly.

J. Meter connection to the service line shall be flanged, Class 125# and conform to ANSI 16.1 for diameter, drilling pattern and thickness. Where companion flanges are required, flanges shall be cast iron and tapped with American Standard internal taper pipe threads. Bolts, nuts and gaskets associated with companion flanges shall be provided for connection to the meter only.

Acceptable Manufacturers

1. Badger Meter, Inc.
2. Other Approved.

7.04 Fire/Domestic Combination Service

A. The fire portion of the combination service shall comply with Division III, Section 7.03.

B. The domestic portion of the combination service shall comply with Division III, Section 7.01 and be accomplished via by-pass piping. By-pass piping shall be brass with threaded connections. Domestic service piping shall be 1-1/2 inches in diameter for a four (4) inch fire service. Domestic service piping shall be two (2) inches in diameter for a six (6) inch and larger fire service.

C. The by-pass assembly shall be fitted with a bronze bodied check valve situated immediately downstream of the meter. The check valve shall be UL listed and approved by FMR. The use of electronic switching devices or spring loaded check valves shall be prohibited.

D. The by-pass assembly shall be fitted with two (2) lockable bronze bodied ball valves; one (1) situated upstream of the meter and one (1) situated downstream of the check valve.

7.05 Water Meter Boxes (Residential and Light Commercial)

A. Meter assemblies ranging in size from 5/8 inch to two (2) inches shall be housed in meter boxes manufactured from high-density polyethylene or fiber reinforced plastic.

B. Meter box lids shall be fiber reinforced plastic. Minimum outside dimensions of the lid shall be 16-5/8 inches by 11-7/16 inches. Down legs on each corner shall be a minimum of 1-1/2 inches long.

<u>Acceptable Manufacturers</u>

1. D/FW Plastics.
2. CDR – 24 inches by 60 inches for 1-1/2 inch and 2 inch meter assemblies.
3. Other Approved.

7.06 Water Meter Vaults (Commercial and Industrial)

A. Vaults shall be constructed of concrete block, pre-cast concrete or cast-in-place concrete (preferred).

B. Vaults shall be designed to withstand a minimum H-10 Line Load. Additional design strength may be required.

C. Vaults for 3-inch through 6-inch meter/back flow assemblies shall be sized to the following inside dimensions: 8 ft x 8 ft x 6 ft (min.) depth and 12 ft x 8 ft x 6 ft (min.) depth. Vaults for meter/back flow assemblies larger than 6-inch shall be sized accordingly while maintaining minimum clearances as shown on applicable details.

D. Meter vaults shall have a minimum six (6) inch thick concrete reinforced base slab. A 12 in x 12 in drain opening shall be cast in the slab. The drain shall be serviced by a 12 inch bed No. 57 stone wrapped with geofabric. The bed of No. 57 stone shall extend to the edges of the excavation.

E. Where vaults are constructed of concrete block, the block shall be 8”x12”x16” in size. Each block wall cell shall be reinforced vertically to a minimum with a No. 5 bar, tied to the slab reinforcing. Block cells shall be filled with a minimum 3,000 psi grout. Longitudinal joints between blocks shall be reinforced with wire.

F. Where vaults are constructed of pre-cast or cast-in-place concrete, the walls shall be a minimum of six (6) inches thick and steel reinforced. Wall reinforcing shall be tied to the slab reinforcing.

G. Vaults shall be covered with a removable pre-cast concrete cover. The cover shall be a minimum of six (6) inches thick and steel reinforced. Cover shall be sealed to top of walls using neoprene gasket material.

H. Where two (2) pre-cast vaults are situated together to form one (1) larger vault, each of the two (2) vaults shall have their separate cover.

I. An aluminum access hatch, minimum 48 inches by 72 inches in size shall be cast in the cover slab. The access hatch shall be situated as shown on details.

J. Bottom side of the meter assembly shall have a minimum twelve (12) inch clearance from the top of the floor slab.

K. Meter assembly shall be supported at a minimum of two (2) points by galvanized pipe saddles. Backflow assembly shall be supported at a minimum of one (1) point by galvanized pipe saddles. Pipe saddles shall be capable of carrying the weight of the assembly. Pipe saddle height shall be adjustable via screw jack. Pipe saddle shall have a minimum four (4) inch square base, one-quarter (1/4) inch thick.

L. Pipe penetrations (annulus between concrete and outside face of pipe) shall be sealed with a mechanical type rubber modular seal or seal approved by the CCWA Engineer.

M. Vault cover shall extend three (3) inches above finished grade.

Acceptable Manufacturers
1. As Approved.

7.07 Vault Access Hatches

A. Vault access shall be via aluminum double hatch having a minimum clear opening of 48 inches by 72 inches. Clear opening dimensions may be increased.

B. Access shall be rated to withstand a minimum H-10 Line Load. Design strength of access hatch may be increased.

C. Access hatch shall have a manual locking arm device to prevent hatch lids from closing.

D. Access hatch shall be capable of being secured using a keyed lock.

Acceptable Manufacturers
1. As Approved.

8.01 Fire Hydrant

A. Fire hydrants shall be of the compression type, closing with line pressure, complying with AWWA C502 for 150 psi working pressure and NFPA, 1993 edition.

B. Hydrants shall have a 4-1/2 inch main valve and a non-freeze design with an automatic drain that closes fully when main valve is opened.

C. Hydrants shall be furnished having factory burying depths of 4'-6" or 5'-0". Deeper burying depths shall be accomplished using extension kits provided by same manufacturer. Break-away device shall be situated +/- 3 inches from finished grade.

D. Hydrant standpipe, fittings and upper barrel shall be ductile iron. Parts designed to break away may be cast iron.

E. Hydrant bolts below ground level shall be stainless steel.

F. Hydrant lead to main line connection shall be mechanical joint.

G. The means of attaching the barrel to the standpipe shall permit 360º rotation of the barrel.

H. Hydrant barrel shall break away from the standpipe at an elevation above ground level without causing damage to the standpipe and stem. When barrel is broken away, internal valve shall function and repairs shall be permitted without excavating or turning off water supply.

I. Hydrants shall be bronze mounted and all internal working parts shall be bronze. Valve seat shall screw into retainer.

J. Internal working parts shall be removable without disturbing the barrel.

K. The operating nut situated atop the hydrant shall be hexagonal and constructed of ductile iron or cast iron and open in a counter clockwise direction. The threads shall be enclosed in an operating chamber separated from the hydrant barrel by a rubber O-ring stem seal lubricated by a grease or oil reservoir.

L. Hydrant shall be equipped with two 2-1/2 inch threaded (7.5 threads per inch) hose connections and one 4-1/2 inch threaded (4 threads per inch) hose connection. Hose and pump connections shall be threaded and pinned to seal the connection to the barrel. Threads shall comply with National Standard Threads. Each connection shall be equipped with a cap and chain.

Acceptable Manufacturers – Product
Approved manufacturers must produce only ductile iron fire hydrants.
1. American - Darling M73.
2. U.S. Pipe - M94.
3. Mueller Company - A421: Ductile Iron Hydrant
4. M&H Valve Company - 129: Ductile Iron Hydrant

8.02 Yard Hydrant

A. Yard hydrant shall be self-draining, non-freeze and operated by lever handle. Lever handle shall be capable of being secured with a keyed lock.

B. Yard hydrant shall be fitted for a standard three-quarter (¾) inch hose connection.

C. Exterior casing shall be schedule 40 galvanized steel and internal operating parts shall be of bronze and the plunger shall be neoprene.

Acceptable Manufacturer - Product
1. Iowa – No. 34.
2. Other Approved.

9.01 General

A. Manholes and wet wells shall be cylindrical and constructed of steel reinforced pre-cast concrete or other concrete structure approved by the CCWA Engineer.

B. Manholes shall have a minimum inside diameter of four (4) feet and be fitted at grade with a cast iron ring and cover.

C. Wet wells shall have a minimum inside diameter of six (6) feet and be accessed via a lightweight cast iron ring and cover.

D. An existing or newly installed manhole intersected by a sanitary sewer force main and the next downstream manhole shall be lined in accordance with Division III, Section 12 "Environmental Coatings".

E. A newly installed lift station wet well and underside of slab over wet well shall be lined in accordance with Division III, section 12 "Environmental Coatings".

9.02 Pre-cast

A. Pre-cast sections shall be manufactured, tested and marked in accordance with ASTM C478.

B. Minimum compressive 28-day strength of concrete in all sections shall be 4,000 psi.

C. Maximum allowable absorption of moisture by concrete shall not exceed 8% of dry weight.

D. Pre-cast sections shall consist of a base section, riser section and eccentric cone top or flat slab top section, as conditions require. Top cone section of manhole housing an air release valve shall be concentric. The sections shall form a continuous uniform assembly.

E. Joints between each section shall be tongue and groove type sealed with a preformed gasket meeting requirements of Federal Specification SS-S-00210, “Sealing Compound, Preformed Plastic for Pipe.

F. Each section shall have not more than two (2) holes for purposes of handling. The holes used for handling shall be tapered and shall be plugged with rubber stoppers or grout after installation.

G. Pipe openings in sections shall be fitted with an integrally cast flexible rubber boot or other approved flexible joint connector. A manufacturer supplied stainless steel band shall be used to seal boot to pipe.

H. Manhole sections shall be fitted with solid cast iron steps of standard pattern conforming to ASTM A-48 or polypropylene plastic coated steel steps conforming to ASTM A615 and ASTM D-4101 and shall be integrally cast into manhole sections. Steps shall be twelve (12) inches wide and spaced at 1'0" on center.

I. Wet well sections shall not be fitted with steps.

J. Manhole base section's invert shall be constructed of cast-in-place concrete or brick and mortar. Invert shall have a "U" shaped channel that matches inverts of the influent and effluent pipes. Invert shelf above "U" shaped channel shall have a minimum 12:1 slope.

9.03 Pre-cast "Dog House"

A. Pre-cast "Dog House" Manholes shall comply with this section.

B. Dog house opening shall be pre-cast by the manufacturer. Field cutting-in dog house opening shall be prohibited.

C. Size of dog house opening shall be as recommended by the manhole manufacturer.

D. Annulus between pipe and opening shall be grouted water tight with non-shrink grout.

9.04 Brick and Mortar

A. Brick used as part of manhole construction shall be either solid or cored, medium hard or better, Grade MA conforming to ASTM C-32 for sewer and manhole brick.

B. Mortar used as part of manhole construction shall be comprised of one (1) part Portland cement to two (2) parts clean sand. The sand shall conform to ASTM C-144.

C. Water shall be clean, potable and free from deleterious amounts of alkalis, acids and organic matter.

9.05 Frames and Covers

A. Manhole rims, toe pockets, frames and covers shall be cast iron conforming to ASTM A-48 for Class 30 Gray Iron Castings.

B. Manhole frames and covers shall be a nominal twenty-four (24) inches in diameter and weigh not less than 340 pounds.

C. Manhole covers shall have the word “WATER” or “SEWER”, according to the service, cast on top in letters two (2) inches high.

D. Manhole frames and covers shall be thoroughly cleaned and painted or coated with a bituminous paint. Defective castings that have been plugged or otherwise treated shall not be used.

E. Manhole covers required to be bolt-down shall be secured with not less than four (4) stainless steel bolts as provided by the manufacturer.

F. Covers situated in paved areas shall be raised to finished grade using no more than five (5) courses of brick and mortar.

G. Covers situated in non-paved areas shall be integrally cast in the top cone section.

<u>Acceptable Manufacturers</u>

1. As Approved.

10.01 Concrete Design

A. Concrete mix design shall be in accordance with ACI 318-89.

1. 28-Day Strength: 4,000 psi, unless otherwise noted.
2. Type: Normal Weight.
3. Slump Range: 3 inch to 5 inch.
4. Weight: 135 pcf to 160 pcf.
5. Air Content: 5% to 7%.
6. Water-Cement Ratio: 0.45 Maximum.
7. Fly Ash: Do Not Use.
8. Chlorides: Do Not Use
9. The use of admixtures shall require the approval of the CCWA Engineer.

B. Concrete materials shall be in accordance with applicable ASTM standards.

1. Portland Cement: Meeting ASTM C150, Type I, natural color, domestic manufacturer. Use only one brand of cement throughout project.
2. Fine Aggregates: Meeting ASTM C33-86.
3. Coarse Aggregates: Meeting ASTM C33-86, No. 57 Stone.
4. Water: Clean, potable and free from deleterious amounts of alkalis, acids and organic matter.

10.02 Reinforcement

A. Reinforcement bars shall be in accordance with ASTM A615, Grade 60, deformed.

B. Welded wire fabric shall be in accordance with ASTM A185. Use size as indicated on drawings.

C. Bar supports, chairs and spacers shall comply with the CRSI Manual for Placing Reinforcing Bars.

D. Reinforcement shall be secured in proper position using No. 16-1/2 or No. 16 gauge black soft-annealed wire.

10.03 Formwork

A. Forms shall be as follows.

1. Pre-engineered steel.
2. Pre-engineered reinforced fiberglass.
3. Lumber: No. 2 Southern Yellow Pine.
4. Plywood for exposed finish: HDO-EXT-APA overlay plywood or B-B Plyform-EXT-APA.
5. Plywood for unexposed finish: C-C EXT-APA.
6. Earth, provided earth is dry, level and stable.

B. Form ties shall be break-back type with 5/8 inch removable vinyl sleeve or one (1) inch diameter break-back cone type.

10.04 Curing and Sealing Compounds

A. Moisture retaining cover shall meet ASTM C171-69 (1980): Waterproof paper, polyethylene film or burlap.

B. Curing and sealing compound shall meet ASTM C309-81, Type 1, Class B: Clear acrylic base.

10.05 Epoxy Bonding Agent

A. The use of an epoxy, bonding agent shall require the approval of the CCWA Engineer.

B. A bonding agent shall be used during the placement of reinforcing steel into existing concrete and shall be of a two (2) component, 100% epoxy resin adhesive system.

10.06 Acrylic Latex Bonding Agent

A. The use of an acrylic, latex, bonding agent shall require the approval of the CCWA Engineer.

B. A bonding agent shall be used as an aid in applying a concrete surface patch or finish to existing concrete and shall be an acrylic polymer emulsion base chemical bonding system.

Acceptable Manufacturers
1. As Approved.

11.01 Mortar and Grout Materials

A. Portland Cement shall meet ASTM C150, Type I, natural color, domestic manufacturer. Use only one brand of cement throughout project.

B. Masonry Cement shall meet ASTM C91-89, non-staining, 22% maximum air content by volume.

C. Hydrated Lime shall meet ASTM C207-79 (1988), Type S.

D. Aggregates for mortar shall meet ASTM C144-87 and ASTM C404-87, size 2 natural and shall be clean, hard and washed sand.

E. Aggregates for cement grout shall meet ASTM C404-87, fine aggregate, size 1.

F. Water reducing and plasticizing admixtures are acceptable.

G. Admixtures containing calcium chloride shall be prohibited.

H. Water shall be clean, potable and free from deleterious amounts of alkalis, acids and organic matter.

I. Non-shrink Grout: Submit products for approval by CCWA Engineer.

11.02 Mortar and Grout Proportions

Proportion materials by volume in accordance with ASTM C270-88a or as follows.

A. Mortar: One (1) part Masonry cement to ½ part Portland cement to aggregate proportioned at not less than 2-1/4 nor more than three (3) times the volume of cementious material used.

B. Grout: One (1) part Portland cement and ¼ to ½ parts hydrated lime to aggregate, proportioned at not less than three (3) times the combined volume cement and lime used.

11.03 Concrete Masonry Units

A. Concrete masonry units shall be in accordance with ASTM C90-85, light weight, Grade N, Type 1.

B. Concrete masonry units shall have a nominal face dimension of 8”x 8”x16” or 8”x12”x16”.

C. Concrete masonry units shall have a minimum compressive strength of 2,500 psi, based on net area.

D. Concrete masonry units damaged in any manner shall not be used.

11.04 Joint Reinforcement

Horizontal joints between concrete masonry units shall be reinforced as follows.

A. Use cold drawn wire meeting ASTM A82-88.

B. Longitudinal rods shall be nine (9) gauge galvanized deformed wires with nine (9) gauge galvanized cross wires welded to form triangular style pattern.

C. Width of reinforcement shall be two (2) inches less than the total wall thickness.

D. Provide reinforcement in ten (10) foot lengths with prefabricated corners and tees at intersecting walls of same design and finish.

<u>Acceptable Manufacturers</u>
1. As Approved.

12.01 Materials Requiring Coatings

A. Materials for buried surface shall be coated as indicated in their respective section.

B. The following materials shall have exterior coatings manufacturer applied or field applied.
   1. Piping and appurtenances
   2. Supports
   3. Pumps
   4. Valves
   5. Equipment and appurtenances

C. The following materials shall be lined by the manufacturer or field applied:

   1. Manhole intersected by a sanitary sewer force main and next downstream manhole.
   2. Lift station wet well and slab area above wet well.

12.02 Coating Schedule

A. Non-Submerged Ferrous Metal
   Minimum Surface Preparation: SSPC – SP6
   Generic System Type: Aliphatic Polyurethane

Coat No.	Induron		Tnemec	
	DFT	Product	DFT	Product
1	3.0	P-14	2.0	#69
2	3.0	Armorgaurd	2.0	#69
3	2.0	5500	2.0	#74

B. Submerged Ferrous Metal
Minimum Surface Preparation: SSPC – SP10
Generic System Type: Polyamide Epoxy

Coat No.	Induron		Tnemec	
	DFT	Product	DFT	Product
1	5.0	PE-54	5.0	#20 P-Pox
2	5.0	PE-54	5.0	#20 P-Pox

C. Non-Submerged Non-Ferrous and Galvanized Metal
Minimum Surface Preparation: SSPC – SP6 (non-ferrous); SP1 (galvanized)
Generic System Type: Aliphatic Polyurethane

Coat No.	Induron		Tnemec	
	DFT	Product	DFT	Product
1	0.5	VW Prime	5.0	#69
2	2.0	5500	2.0	#74

D. Submerged Non-Ferrous and Galvanized Metal
Minimum Surface Preparation: SSPC – SP10 (non-ferrous); galvanized per coating manufacturer. Generic System Type: Polyamide Epoxy

Coat No.	Induron		Tnemec	
	DFT	Product	DFT	Product
1	0.5	VW Prime	5.0	#69-1211
2	5.0	PE-54	5.0	#69

<u>Acceptable Manufacturers</u>

1. Induron.
2. Tnemec.
3. As Approved.

12.03 Manhole and Wet Well Lining

A. Line existing concrete manhole with a modified aliphatic amine epoxy mortar or aggregate filled epoxy coating system or other coating system approved by the CCWA Engineer.

B. Materials required for concrete surface preparation/restoration, lining and finishing shall be supplied by the same manufacturer.

C. Line new manhole, wet well and underside of slab over wet well with an integrally cast polyvinyl chloride or high density polyethylene liner.

<u>Acceptable Manufacturers - Product</u>

1. Tnemec - Chembloc H2S (existing manhole coating system0.
2. Sauereisen - Sewergard 210, 210S, 210RS (existing manhole coating system).
3. A-LOK Products, Inc. - Duraplate 100 (new manhole, wet well, slab integrally cast liner).
4. Agru America - AGRU Sure Grip (new manhole, wet well, slab integrally cast liner).
5. As approved.

13.01 Stabilization Stone

A. Stabilization stone shall be No. 57 size and conform to ASTM C33-78 unless noted otherwise.

B. Maximum stone size shall be 1-1/2 inches unless noted otherwise.

C. Stone shall be clean, tough, uniform quality, durable fragments of crushed rock, free from flat, elongated, soft or disintegrated pieces, or other objectionable matter occurring either free or as coating on stone.

13.02 Detectable Underground Utility Marking Tape

A. Tape shall have a minimum overall thickness of 5 mils in accordance with ASTM D2103 and a width as follows.

1. 2-inch width for pipes up to 12 inches in diameter.

2. 3-inch width for pipes 14 to 24 inches in diameter.

3. 6-inch width for pipes 30 and 36 inches in diameter.

B. Tape shall have a 0.35 mil solid aluminum foil core with a reverse print laminate to the aluminum foil.

C. Tape shall have a tensile strength of 35 pounds per inch in accordance with ASTM D882.

D. Tape shall be color-coded in accordance with the American Public Works Association as follows.

1. “Blue” for potable water and associated lines.

2. “Green” for sanitary sewer and associated lines.

<u>Acceptable Manufacturers</u>
As Approved.

13.03 Other Materials

Materials not covered in Division III, Material Requirements, shall be in accordance with the approved plans.

1.01 Contractor License

A. A licensed Utility Contractor shall install any underground utility or component thereof.

B. Prior to commencing construction activities on a CCWA approved project, the CCWA Engineer shall receive a copy of the Utility Contractor's License.

1.02 Utility Notification

A. The Official Code of Georgia, Title 25, Chapter 9 requires that utilities be located in the proposed work area prior to commencing any clearing, grading or excavation activity.

B. The Utilities Protection Center can be reached at (770) 623-4344 or 1-800-282-7411.

C. The Utilities Protection Center shall be notified at least three (3) business days prior to commencing work.

1.03 Work Commencement

A. Clearing and grubbing activities shall not commence on any project until Clayton County T & D has issued a Land Disturbance Activity Permit.

B. Work on a water distribution system and/or sanitary sewer system shall not begin until the CCWA approves the development plans.

C. The CCWA Engineer shall receive a 48-hour notice prior to commencing construction activities on a water distribution system and/or sanitary sewer system.

D. A set of plans stamped approved by the CCWA shall be present on the job site during all phases of construction of the water distribution system and/or the sanitary sewer system.

E. The installation of water distribution piping shall not begin until curb and gutter has been installed.

1.04 Miscellaneous Standards

Construction standards not covered in Division IV, Construction Standards, shall be in accordance with the approved plans. Construction should comply with the Department of Labor, Occupational Safety and Health Administration, 29 Code of Federal Regulations Part 1926, Subpart P, revised July 1, 1995.

2.01 General

A. Work covered by this section shall include all labor, equipment and accessories required to distribute material.

B. All materials installed as part of an extension to the existing water distribution system and sanitary sewer system shall be new.

2.02 Delivery

Equipment and facilities shall be furnished for unloading and distributing pipe, equipment and materials.

2.03 Handling

A. Pipe shall be handled by use of forklift or excavator using choker straps or cable.

B. Any pipe, equipment or material dropped or dumped during handling procedures shall be subject to rejection by the CCWA without further justification.

2.04 Storage

A. Pipe shall not be strung more than 1,000 feet beyond the point where pipe is being laid.

B. Drainage ditches shall not be obstructed.

C. Necessary arrangements shall be made to store pipe, fittings, valves and accessories that cannot be distributed along the route.

2.05 Maintenance and Protection

A. The contractor shall be responsible for maintenance and protection of all pipe, equipment and material.

A. All equipment shall be boxed, crated or otherwise completely enclosed and protected during transportation, handling and storage.

C. Equipment shall be stored above ground level and adequately supported on wood blocking or other approved support material.

D. All equipment shall be protected from exposure to elements and shall be kept dry at all times.

E. Pumps, motors, valves, control panels, instrumentation, electrical equipment and other equipment having anti-friction or sleeve bearings shall be stored in a weather-tight enclosure which is maintained at a minimum air temperature of 60°F.

F. Any pipe, equipment or material damaged by impact, vibration, abrasion, discoloration or other damage shall be repaired in accordance to manufacturer instructions or replaced at the discretion of the CCWA.

3.01 Clearing and Grubbing

A. Prior to commencing clearing activities, areas designated by the plans to be cleared shall be demarcated using survey ribbon, stakes or other suitable means.

B. In areas to be cleared, all trees, stumps, buried logs, brush, grass and other unsatisfactory materials shall be removed.

C. Trees to remain in or near work area shall be protected from clearing activities.

D. All damaged trees over three (3) inches in diameter shall be repaired by an experienced nursery expert.

E. Tap roots and other projections exceeding 1-inch in diameter shall be grubbed out to a depth of at least 18 inches.

F. All holes remaining after grubbing activities shall be filled with suitable material and properly compacted in layers to density required for in-place backfill.

G. All materials cleared and grubbed shall be disposed of off-site in accordance with applicable local, state and federal regulations.

H. Burning of any material or debris shall not be permitted on CCWA property.

I. Prior to and upon completion of clearing and grubbing activities, install erosion control and sedimentation measures as identified on the Erosion Control and Sedimentation Plan prepared by the Design Engineer.

J. Prior to commencing any other job site activity, installed erosion control and sedimentation measures shall be inspected and approved by Clayton County T & D.

3.02 Topsoil Stockpiling

A. Remove topsoil to full depth encountered in areas to be graded and stockpile soil and install erosion control devices as indicated on drawings.

B. Soil shall be placed such that the integrity of an excavation or proposed excavation is not jeopardized.

C. Soil shall not be stockpiled against tree trunks.

D. Stockpile shall be shaped to drain.

3.03 Removing Pavement

A. Removal of pavement shall be performed so as not to endanger roadway activity. Work shall be coordinated and be in compliance with the appropriate road and highway agencies.

B. Pavement shall be marked squarely and neatly to size of excavation.

C. Pavement shall be scored and broke along the marked lines using a rotary saw and jackhammer. Pavement shall not be machine pulled for initial brake.

D. Upon removal, pavement shall be loaded and disposed of off-site.

E. Adjacent pavement damaged during construction shall be removed as described above.

F. Driveways and sidewalks shall be removed to their full width from the edge of curb or road pavement to the nearest construction/control joint.

G. Curbs shall be removed for the entire length from control joint to control joint.

4.01 Soil Excavation

A. Excavation shall include those measures necessary to establish grades indicated on drawings for utilities, structures and appurtenances.

B. Excavated soil shall be placed in a location such that the integrity of the excavation is not jeopardized.

C. Excavation walls shall be sloped or stepped in accordance with recognized industry standards.

D. The Contractor shall assume the responsibility for design and construction of excavation shoring and bracing capable of supporting excavations and construction loads.

E. The excavation shall provide space for foundation work and inspection.

F. Excavations shall be covered in accordance with applicable regulations and/or barricaded and roped-off with identifying tape during work progress.

4.02 Rock Excavation

A. Excavation shall include those measures necessary to establish grades indicated on drawings for utilities, structures and appurtenances.

B. Rock shall be excavated to a minimum depth of six (6) inches below grades indicated on drawings.

C. The Contractor shall be responsible for determining methods required for removal of rock or hard materials.

D. Perform blasting only after receiving written approval from the CCWA Engineer and regulatory agencies.

E. A licensed explosive contractor shall perform blasting operations.

F. Blasting operations shall be conducted in accordance with all local, state and federal regulations.

G. Excavated rock shall not be used as backfill in the pipe trench.

4.03 Pipe Trench Excavation

A. Pipe trenching shall comply with excavation and rock excavation specifications.

B. Trench should be excavated to natural undisturbed soil.

C. Where unsuitable material is encountered, over excavate through unsuitable material and backfill to required grade with No. 57 stone. The CCWA Inspector shall determine depth of over excavation.

D. Where encountered, remove rock to a minimum of six (6) inches below required bottom of trench elevation and backfill to required grade with No. 57 stone.

E. Bottom of trenches shall be prepared so that the entire length of the pipe barrel is supported.

F. Maintain trenches dry at all times using pumps, well points or other dewatering means.

G. Limit trenching to not greater than 300 feet ahead of completely backfilled work.

H. In populated areas, cover or barricade open trenches until completely backfilled.

I. Open trenches shall be made safe at all times.

5.01 Pipe Bedding

A. PVC sewer shall be laid atop a minimum of four (4) inches of No. 57 stone. No. 57 stone shall be extended to the top of pipe. Stone shall be shovel sliced from beneath the pipe up to one-half (½) the pipe diameter.

B. DIP may be laid atop undisturbed suitable soil.

C. Valves shall be laid atop a minimum of eight (8) inches of No. 57 stone. No. 57 stone shall be extended up to one-third (1/3) the valve diameter. Stone shall extend twelve (12) inches in all directions of valve. Stone shall be shovel sliced.

D. Fire hydrants shall be set atop a minimum of eighteen (18) inches of No. 57 stone. Stone shall extend up six (6) inches above drain holes. Stone shall extend eighteen (18) inches to the sides of the hydrant.

E. Yard hydrants shall be set atop a minimum of six (6) inches of No. 57 stone. Stone shall extend up six (6) inches above drain hole. Stone shall extend twelve (12) inches to the sides of the hydrant.

5.02 Pipe, Fitting, Valve and Fire Hydrant Installation

A. Prior to placement, the interior of pipes, fittings and valves shall be cleaned free of dirt and debris.

B. Pipe, fittings, valves and accessories shall not be laid or jointed in water.

C. Pipe, fittings, valves and accessories shall be lowered into their respective positions using an excavator with choker straps or cables. A slight hole shall be dug where pipes are to be jointed to relieve pipe bell of any load. Pipe barrel shall be supported for its entire length.

D. Gravity flow pipe shall be laid to the consistent grade change as indicated on drawings and aligned straight using pipe laser or transit.

E. Pressure flow pipe shall be aligned to follow route. Pipe alignment shall not be deflected greater than 75% of the manufacturer's recommended maximum deflection.

F. Install compression type gaskets in accordance with manufacturer's instructions to ensure proper joint sealing.

G. Pipe shall be jointed in accordance with manufacturer's instructions. The mating ends (bell and spigot) shall be thoroughly cleaned and soaped before jointing. The mating ends shall be aligned and shoved together using a steady force.

H. Connections of fittings, valves and fire hydrants shall be with bolts and nuts as supplied with the component. Upon tightening, a minimum of two (2) bolt threads shall be exposed to ensure proper thread engagement.

I. Retaining gland of mechanical joint shall be evenly spaced from the fitting or valve for its entire circumference upon installation.

J. After jointing pipe, repair any damage to pipe's protective coating in accordance with manufacturer's instructions or replace pipe.

K. Prior to jointing consecutive pipe, backfill previously jointed pipe with sufficient material to prevent movement.

L. Place a plug in the open end of uncompleted laid piping at the end of each day.

M. Any component of a piping system disturbed after installation may be required to be taken up and reinstalled.

5.03 Thrust Blocking

A. Thrust blocking shall be installed at all bends, tees, valves, fire hydrants and points where thrust may develop in pressurized piping.

B. Thrust blocking shall consist of cast-in-place concrete, tie rods, combinations thereof or other method approved by the CCWA Engineer.

C. Cast-in-place concrete blocking shall be formed to the required dimensions and installed against undisturbed earth. Blocking size may be increased based on soil bearing capacity.

D. Concrete shall have a minimum 3,000 psi compressive strength at 28 days.

E. Bolts and nuts shall be protected from concrete coverage.

5.04 Manhole and Wet Well Installation

A. Manholes and Wet Wells shall be set atop a twelve (12) inch bed of No. 57 stone that extends a minimum of twelve (12) inches beyond all exterior sides.

B. The bedding of No. 57 stone may be replaced with a six (6) inch layer of steel reinforced cast-in-place concrete.

C. The bed shall be prepared so that the manhole is set level.

D. Manhole sections shall be handled with lifting straps or hooked cables using a minimum of two (2) of the manufactured manhole lifting holes.

E. Manhole sections shall be positioned such that influent and effluent piping enter the center of their respective opening not pinching the rubber boot seal. Pipe shall not rest on invert of opening.

F. Stainless steel boot clamps shall be tightened in accordance with the manufacturer's instructions.

G. Annulus between pipe and rubber boot shall be grouted with non-shrink grout prior to commencing backfill operations.

H. An invert shall be built in each manhole to transition flow from the influent pipe to the effluent pipe.

I. The built invert shall be shaped as a “U” channel and match the inverts of the influent and effluent pipes.

J. Inverts shall be built of cast-in-place concrete or brick and mortar. Note that brick and mortar inverts shall be finished on top with a ½-inch layer of mortar.

K. Prior to jointing consecutive sections, tongue-and-grooved ends shall be cleaned free of dirt and debris.

L. Tongue-and-grooved ends shall be fitted with preformed gasket sealing compound.

M. Manhole sections shall be stacked level and plumb at all times.

N. Manhole sections shall be stacked such that interior steps are vertically aligned.

O. Manhole lifting holes shall be sealed using non-shrink grout throughout the entire depth of hole.

P. Upon bringing manhole to finished grade with brick and mortar (if applicable), set ring and cover with non-shrink grout.

Q. Manholes shall be kept free of dirt and debris.

5.05 Meter Box and Vault Installation

A. Meter boxes shall be installed as follows.

1. Meter box shall be set atop undisturbed or compacted soil. Backfill around box shall be compacted using a hand tamp.

2. Top of meter box shall be set flush with finished grade. Meter box shall not be set in a depression.

3. Soil level within meter box shall be to the bottom of the meter assembly and free of debris.

B. Meter vaults shall be installed as follows.

1. Meter vault shall be bedded atop undisturbed or compacted soil. Backfill around vault shall be compacted in accordance with Division IV, Section 6.

2. Vaults shall be set atop a minimum 12 inch layer of No. 57 stone that extends a minimum of twelve (12) inches beyond the outside face of all walls.

3. The bedding of No. 57 stone may be replaced with a six (6) inch layer of steel reinforced cast-in-place concrete.

4. The stone filled sump beneath vault drain shall be fully encased in a geo-fabric membrane.

5. The bed shall be prepared so that vault is set level.

6. Annulus between pipe and wall openings shall have a flexible water tight seal installed prior to commencing backfill operations.

7. Prior to installing vault cover, abutting ends shall be cleaned free of dirt and debris.

8. Abutting ends of vault and cover shall be fitted with preformed gasket sealing compound.

9. Vault lid lifting holes shall be sealed using non-shrink grout throughout the entire depth of hole.

10. Vault shall be kept free of dirt and debris.

11. Top of vault lid shall be set three (3) inches above finished grade. Vault shall not be set in a depression.

5.06 Borings and Casings

A. Construction shall be performed so as not to interfere with, interrupt or endanger roadway and railway surface and activity thereon, and minimize movement of the surface, structures and utilities above and in the vicinity of the casing.

B. Work shall be coordinated and be in compliance with the appropriate highway and railroad agencies and their policies.

C. Contractor shall monitor ground movement during construction. Contractor shall be responsible for all settlement or up heave resulting from casing operations and shall repair and restore moved or damaged property to its original condition.

D. Work shall not interfere with storm water drainage devices. Storm water and/or groundwater shall be controlled and shall not enter any excavation or boring.

E. Boring and jacking operations shall be performed from an excavation located at one end of the section to be bored. The excavation shall be kept dry at all times.

F. Boring and jacking of casings shall be completed by dry auger boring without jetting, sluicing or wet boring. Free boring (boring without casing) shall be prohibited. The boring diameter shall be essentially the same as the outside diameter of the casing.

G. Boring may be advanced slightly ahead of jacked casing in a manner that will prevent voids forming in the earth around the perimeter of the casing. Horizontal and vertical alignment of the casing shall be frequently checked.

H. When rock is encountered, the Utility Contractor at his option may continue to install the casing by removing the rock through the casing. Should the CCWA or other governing agencies determine the rock cannot be removed through the casing then an alternate means of crossing shall be determined.

I. Casings damaged during installation shall be repaired. Should the damaged casing prevent the installation of the pipe, then that boring and casing shall be abandoned.

J. Casing lengths shall be as long as practical. Jointing shall be accomplished by single grooved butt welding for the entire circumference of the pipe.

K. Casing shall be cleaned free of dirt and debris prior to installing pipe.

L. After casing installation is complete, the proposed pipe can be installed. The pipe shall be installed to proper grade and alignment according to the contract documents.

M. Pipe shall be supported within casing to limit radial movement to a maximum of one (1) inch.

N. A minimum of one (1) spacer shall be provided for each nominal section of pipe. Casing spacers shall be attached to the pipe at a maximum of 18 to 20 foot intervals.

O. The annulus between the pipe and casing, at each end, shall be sealed using brick and mortar.

5.07 Pipe and Valve Identification

A. The marking of utilities immediately after installation is required as detailed in the Official Code of Georgia, Code 25-9 "Georgia Utility Facility Protection Act".

B. Install mylar detection tape and/or other detectable wire, during backfill operations, above nonferrous pipe or any pipe having more than six (6) feet of cover. Detection tape or wire shall be installed centered, approximately 12 to 18 inches above the pipe.

C. Service lines and valves shall be locatable via marked curbing or other CCWA approved method. Adjacent street curb to service line and valves shall be marked via saw-cut as follows. Curb markings shall be a minimum of four (4) inches in height.

1. "W" for water service location.
2. "V" for water valve location.
3. "S" for sewer service location.

6.01 Backfill

A. Excavations shall be backfilled using suitable material.

B. Place no backfill until any poured concrete has developed design compressive strength.

C. Place backfill against below grade walls in uniform level lifts to prevent wedging action.

D. Backfill shall not be placed on surfaces that are saturated, frozen or containing frost or ice.

E. Place backfill in excavations as follows.

1. Backfill in loose lifts not exceeding 6 inches when compacting using manual tamping devices (jumping jack).

2. Backfill in loose lifts not exceeding 12 inches when compacting using vibrating/ramming devices (sheep-foot vibratory roller).

F. Any settlement shall be filled and compacted to conform with adjacent surfaces.

G. Material remaining after completion of backfill operations shall be disposed off-site.

6.02 Compaction

A. Backfill shall be compacted using manual tamping devices or vibrating/ramming devices.

B. Use manual tamping devices as follows.

1. When area is inaccessible to vibrating devices and within 5 feet of below grade walls (includes manholes).

2. From bottom of pipe trench to twelve (12) inches above the top of pipe.

C. Compaction requirements are as follows.

1. Backfill, beneath and within 10 feet of the building line of any structure, proposed structure or other area determined by the CCWA, shall be compacted for the entire depth to a minimum of 100% of the maximum dry density as determined by a Standard Proctor Analysis.

2. Backfill, beneath any road, walk, proposed improvement or area determined by the CCWA shall be compacted for the entire depth to a minimum of 100% of the maximum dry density as determined by a Standard Proctor Analysis.

3. Backfill in road right-of-way and not described above shall be compacted the entire depth to a minimum of 95% of the maximum dry density as determined by a Standard Proctor Analysis.

4. Backfill not described above shall be compacted for the entire depth to a minimum of 90% of the maximum dry density as determined by a Standard Proctor Analysis.

6.03 Compaction Testing

A. Soil samples from the proposed construction area shall be analyzed for maximum dry density in accordance with ASTM 698 – Method C.

B. The extent of testing required shall be dependent upon soil conditions, Contractor's methods of construction and regulatory requirements.

C. Minimum compaction testing shall be as follows.

1. Backfill in excavations shall be tested at 2-foot lift intervals per 1,000 square feet of fill or as deemed necessary by the CCWA Inspector.

2. Backfill in trench excavations shall be tested at 2-foot intervals per 400 linear feet of fill or as deemed necessary by the CCWA Inspector.

7.01 Grading

A. Grade areas to lines and elevations indicated on drawings or to surrounding surface grades.

B. Graded areas shall be within 0.10 foot of required subgrade elevation and shall not permit the ponding of water.

C. In areas to receive grassing, redistribute stockpiled topsoil over graded areas to a minimum depth of four (4) inches. Provide additional topsoil to achieve required depth.

D. Where finish grade meets or abuts curbs, walks or pavement, uphill grades shall be slightly higher than curb or pavement to permit drainage.

E. Excess soil and debris shall be removed from the jobsite.

F. Stabilize site in accordance with the approved soil erosion and sedimentation control plan.

7.02 Replacing Pavement

A. Existing pavement shall be replaced in accordance to the standards required by Clayton County T & D and/or the Georgia Department of Transportation.

B. Construction shall be performed so as not to endanger roadway activity. Work shall be coordinated and be in compliance with the appropriate road and highway agencies.

C. Pavement shall be reinstalled immediately after completing backfill operations and compaction requirements.

D. Driveways and sidewalks shall be replaced to their full width from the edge of curb or road pavement to the nearest construction/control joint.

E. Curbs shall be replaced for the entire length from control joint to control joint.

F. Removed pavement shall be disposed offsite.

G. Use Detail Nos. 28.1 and 29.1 when applicable.

8.01 General

A. The following tests shall be performed as indicated at the expense of the Developer/Utility Contractor.

B. Water distribution systems and/or sanitary sewer systems failing the required tests shall be repaired at the expense of the Developer/Utility Contractor.

8.02 Hydrostatic (Water Main and Force Main)

A. Water distribution piping and force mains shall be subjected to a hydrostatic pressure test in accordance with AWWA Standard C600, latest revision.

B. Combination air/vacuum release valves, corporations and curb stops and fire hydrant shall be installed at the high point of elevation in the pipe line system to release air.

C. Pipe shall be filled with potable water to a pressure of 250 psi and pipe pressure allowed to stabilize.

D. Pressure shall be maintained, without the addition of water, for a minimum period of two (2) hours.

E. Test shall be considered acceptable when a water pressure of 250 psi is maintained for a period of two (2) hours.

8.03 Air Pressure (Gravity Flow)

A. All gravity sewer pipe shall be subjected to a low air pressure test in accordance with Unibell UNI-B-6-90.

B. Pipe shall be free of dirt and debris.

C. During testing, personnel shall not be permitted in manholes connected to pipe being testing.

D. The internal air pressure of the pipe shall be raised to approximately four (4) psi.

E. The test shall begin when the stabilized pressure is at a minimum of 3.5 psi.

F. Test shall be considered acceptable when an air pressure equivalent to the stabilized pressure is maintained for a period of 10 minutes.

8.04 Televising (Gravity Flow)

A. Sanitary sewers shall be televised to ensure integrity.

B. Pipe shall be free of dirt and debris.

C. Televising cable attached to a video monitor shall be directed through pipe to view for the following deficiencies.

1. Cracks in pipe and liner material.
2. Rolled gaskets.
3. Leaking joints.
4. Deviations from line and grade – Sewer pipe shall be viewed from one manhole to the next adjacent illuminated manhole. Pipeline shall show more than three-quarters (3/4) of the opening at the opposite end of the pipeline.
5. Pipe deformations.
6. Other deficiencies.

D. Test shall be considered acceptable when the televised pipe does not reveal the deficiencies indicated in Item C.

8.05 Mandrel (Gravity Flow)

A. Sanitary sewers shall be tested for deformation using a mandrel in accordance with ASTM D 3034.

B. Pipe shall be tested when backfill and compaction are complete.

C. Pipe shall be free of dirt and debris.

D. Chords shall be attached to each end of the mandrel. One chord shall be passed through the section of pipe being tested. One chord shall be used to retrieve the mandrel should the pipe not allow passage.

E. The mandrel shall be sized such that its outside dimension is 5% less than the actual inside diameter of the pipe.

F. Test shall be considered acceptable when mandrel passes freely through pipe.

8.06 Static Water Level (Wet Well)

A. Test wet well for infiltration/exfiltration after receiving field approval of wet well lining installation.

B. Visually inspected wet well for infiltration.

C. Fill wet well with potable water to a level equal to the high water alarm elevation and mark that elevation.

D. Test shall be considered acceptable when a water level drop of less than one-quarter (<1/4) inch is measured after a 24 hour period.

E. Wet well sections exhibiting infiltration/exfiltration shall be replaced.

9.01 General

A. All newly installed water distribution piping and piping affected during construction shall be disinfected in accordance with AWWA C651.

B. All disinfection procedures shall be coordinated with the CCWA inspector.

C. CCWA personnel shall operate existing valves during disinfection procedures.

D. The CCWA shall be involved in disinfecting the following in-place piping.

1. Water mains.
2. Service connections up to and including water meters and back flow prevention devices.

E. The CCWA shall supply an appropriate chlorine solution and complete disinfection procedures.

F. Water for disinfection shall be provided by the CCWA at no expense to the contractor. Excessive use of water during disinfection procedures, as determined by the CCWA, may be reason for charges to be levied against the contractor.

G. Collection and testing of water samples shall be performed by the CCWA.

H. No water piping system shall be placed in service until written approval is received from the CCWA Engineer.

I. The Contractor shall be responsible for preventing soil erosion associated with disinfecting procedures.

9.02 Initial Flushing

A. Prior to disinfection, the Contractor shall flush piping system with sufficient water to create a minimum velocity in the pipe of 2.5 ft/s.

B. Flushing shall be performed by pushing water through a laid section of pipe with one end of section open to the atmosphere above existing grade.

C. Piping shall be flushed until water sampled from the piping yields a turbidity measurement of 0.5 NTUs or less.

D. All piping and components associated with service connections shall be thoroughly flushed with fresh potable water prior to installation.

E. Upon completion of flushing, laid pipe with one end open to atmosphere shall be re-laid to depth indicated in Construction Drawings.

9.03 Chlorination and Flushing

A. The CCWA shall introduce a chlorine solution having a concentration of 50 to 100 milligrams per liter (mg/l) into the water main.

B. Upon introducing the chlorine solution, all valves associated with the water main shall be fully operated to ensure complete disinfection.

C. All piping and components associated with service connections shall be thoroughly flushed with a 200 mg/l chlorine solution.

D. Water main shall have a minimum 25 mg/l chlorine residual after a 24-hour retention period.

E. After the 24-hour retention period, flush heavy chlorinated water from system through fire hydrants. When necessary, the Contractor shall provide sodium thiosulfate to neutralize the chlorine residual. Contractor shall apply sodium thiosulfate in accordance with manufacturer's recommendations.

F. Flushing shall continue until water in main has a residual chlorine concentration of 1 mg/l.

9.04 Disinfection Testing

A. After chlorination and flushing is complete, the CCWA shall collect water samples from the system and perform 24-hour analyses in accordance with the Georgia Rules for Safe Drinking Water.

B. After the initial 24-hour analysis is complete and acceptable, a volume of water determined by the CCWA Inspector shall be flushed from the water system and water samples shall be collected for a second 24-hour analysis.

C. After the second 24-hour analysis is complete and acceptable, the water main may be put into service.

D. Disinfection of the water main shall be repeated until testing is acceptable.

E. Laboratory analyses shall be performed and certified by the CCWA.

10.01 Formwork

A. Formwork shall comply with ACI 347R-94.

B. Contractor shall be responsible for design and construction of concrete formwork capable of supporting construction loads. Forms shall be as follows.

1. Pre-engineered steel.
2. Pre-engineered reinforced fiberglass.
3. Wood.
4. Earth.

C. Construct formwork to lines and elevations as shown on drawings.

D. Construct forms to be removed without hammering or prying against concrete.

E. Plug holes in existing forms to prevent leakage of cement.

F. Clean forms of dirt and debris prior to each use.

G. Form ties shall be as follows.

a. Break-back type with 5/8-inch removable sleeve or 1-inch cone type.

b. For retaining walls and walls below liquid level, provide ties with positive water stop projection at center of wall.

H. Prior to placement of reinforcing steel, apply form release agent to formwork. Release agent shall be evenly applied and compatible with type form being used.

I. Construct bulkheads with shear keys at separation of pours.

J. Shear key width shall be 1/3 of the wall or slab thickness.

K. Removal of formwork shall take place only after concrete has developed sufficient strength to support itself and resist damage during removal.

L. Forms used below grade shall be removed prior to backfill.

10.02 Steel Reinforcement

A. Shop fabricate reinforcement to shape and dimensions as indicated on drawings.

B. Use no bars or wire mesh with kinks or bends not shown on the drawings.

C. Secure reinforcement in forms in accordance with the drawings, ACI 315, ACI 318 and CRSI "Recommended Practice for Placing Reinforcing Bars".

D. Steel reinforcement shall set atop concrete bricks and/or be spaced using steel highchairs. When highchairs are used as a form spacer, the highchair feet shall be plastic dipped.

E. Concrete coverage over reinforcing shall be as follows.

1. Concrete cast against earth .....3 inches.
2. Formed concrete exposed to earth or weather .....2 inches.
3. Slabs and walls exposed to wet conditions.....2 inches.
4 Interior slabs and walls .....¾ inch.

F. Splice reinforcement a minimum of 48 times (x) bar diameter. Mechanical splices shall be prohibited.

G. Steel reinforcement, at the time cement is placed, shall be free of dirt, rust and debris. Reinforcement with flaking rust shall not be used.

H. Conduits and pipes shall have same concrete coverage as reinforcing steel.

I. Tie wire shall be used to secure reinforcing.

J. Joints in wire mesh shall be lapped one wire spacing plus 2 inches. Wire mesh shall have one (1) inch of concrete cover at forms.

10.03 Placement

A. Place concrete in accordance with ACI 301-89, Chapter 8.

B. Place no concrete until all embedded items and reinforcement have been placed in accordance with the plans.

C. A CCWA Inspector shall approve formwork layout and placement of steel reinforcement prior to placing concrete. Provide 24-hour notice prior to placing concrete.

D. Concrete shall not be placed on loose, saturated or frozen soil.

E. Concrete shall not be placed in water unless approved by the CCWA Engineer.

F. Concrete shall be placed only when ambient temperature is at 40º F and rising or place concrete in accordance with ACI 306-R88.

G. During hot weather (>80°F), place concrete in accordance with ACI 305-R89.

H. Saw control joints as soon as concrete can be traveled by foot without leaving impressions. Saw joint depth shall be ¼ of the slab depth.

I. Consolidate all placed concrete with vibrator of suitable vibrations per minute.

J. Do not pull or push concrete with vibrator.

K. Do not drop concrete more than four (4) vertical feet.

10.04 Finishing

A. Screed floor slabs or tops of walls by use of straight edge or screed board.

B. Concrete shall be finished as follows.

1. Interior slab to receive setting bed.....float finish.
2. Interior slab exposed .....trowel finish.
3. Exterior slab exposed .....broom finish.
4. Exterior wall/column exposed .....rubbed finish.
5. Unexposed concrete.....form finish.

10.05 Curing

A. Prevent freshly placed concrete from premature drying and protect from excessive hot or cold temperatures.

B. Maintain freshly placed concrete, without drying, at a relatively constant temperature.

C. Begin curing after placement and finishing of concrete as soon as free water has disappeared from concrete surface.

D. Curing methods shall be by the continuous application of water or by applying a liquid membrane forming curing-sealing compound to the fresh concrete surface.

1. Curing by the continuous application of water shall occur for a period of not less than 72 hours.

2. After application of liquid membrane forming curing-sealing compound, maintain continuity of coating and recoat areas damaged during curing period. Curing period shall be not less than 72 hours.

E. Do not apply liquid curing sealing compound to concrete that is to be finished with a coating material such as paint, flooring material, etc.

A. Priming, painting and special coating of all surfaces shall include but are not limited to the following.

1. Piping and appurtenances.
2. Supports.
3. Pumps.
4. Valves.
5. Equipment and appurtenances.
6. Concrete and masonry.
7. Structural and miscellaneous metals.

B. Priming, painting and special coating of all surfaces shall be in accordance with the coating manufacturer's recommendations.

C. A manufacture's representative of the approved coating system shall field approve all surface preparation and coating application when lining manholes and wet wells.

Appendix A Georgia EPD Sanitary Sewer Approval Letter

Georgia Department of Natural Resources
Environmental Protection Division, Watershed Protection Branch
4220 International Parkway, Suite 101, Atlanta, Georgia 30354
404/675-6232

Reply to:
Engineering & Technical Support Program
Phone: 404/675-6233; Fax 404/675-6246

January 3, 2006

Mr. Clifford W. Beroset, P.E.
Clayton County Water Authority
1600 Battle Creek Road
Morrow, Georgia 30260

RE: Clayton County Water Authority
Standard Construction Specifications
Clayton County
EPD Project No. 25-541

Dear Mr. Beroset:

The Georgia Environmental Protection Division has completed its review of the revised Clayton County Water Authority Standard Construction Specifications. All of our comments have now been satisfactorily addressed. We are returning one copy of the approved standard construction specifications for your use and are retaining an additional copy for our files.

If you have any questions or concerns please feel free to contact me at (404) 675-1656 or via email reginald_williamson@dnr.state.ga.us.

Sincerely,

Reginald Williamson

Reginald Williamson, Engineer
Engineering & Technical Support Program

cc: M. Wade Brannan, General Manager, Clayton County Water Authority
Terray R. Hicks, Deputy Manager, Clayton Water Authority

Appendix A *Georgia EPD Water Distribution Approval Letter*

Georgia Department of Natural Resources

2 Martin Luther King Jr. Drive, S.E., Atlanta, Georgia 30334
Lonice C. Barrett, Commissioner
Harold F. Reheis, Director
Environmental Protection Division

Reply To:
Drinking Water Permitting & Engineering Program
2 Martin Luther King Jr. Dr., S.E., Suite 1362 East
Atlanta, Georgia 30334

April 5, 2006

Clifford Beroset
Clayton County Water Authority
1600 Battle Creek Road
Morrow, Georgia 30260

RE: **Standard Specification Approval**
Clayton County Water Authority
Clayton County, Georgia
WSID# 0630000

Dear Mr. Beroset:

The standard specifications for the Clayton County Water Authority have been reviewed and are hereby approved by the Drinking Water Permitting and Engineering Program of the Environmental Protection Division.

Reminder, following installation, all new and repaired water lines and appurtenances shall be flushed, pressure tested and disinfected. Samples shall be collected and tested for satisfactory microbiological quality of the water, prior to placing the lines into service.

All materials used and come into contact with drinking water during its distribution shall not adversely affect drinking water quality and public health and must be certified for conformance with American National Standards Institute/National Sanitation Foundation Standard 61 (ANSI/NSF Standard 61).

Any pipe, solder, or flux which is used in the installation or repair of the public water distribution system shall be lead free with not more than 8.0% lead in pipes and fittings and not more than 0.2% lead in solders and flux.

When applicable, a land disturbing activity permit must be obtained (either from local government or EPD, as applicable) prior to the start of any construction. If applicable to your site, you must file a Notice of Intent (NOI), with the Environmental Protection Division, to be covered under the General Permit for Stormwater Discharge Associated with Construction.

One set of the approved standard specifications are being returned herewith and one set is being retained for our files.

Sincerely,

Sheila Pippin
Environmental Engineer
Drinking Water Permitting & Engineering Program
Phone:(404) 657-8283

DELEGATION AGREEMENT FOR
REVIEW AND APPROVAL OF
SEWER SYSTEM EXTENSIONS

1.0 PURPOSE

Pursuant to Rules and Regulations for Water Quality Control Chapter 391-3-6 paragraph .02, the Environmental Protection Division (EPD) can delegate the review and approval of certain types of sewer system extensions to local governments that have demonstrated the capability for such review and approval. This delegation of responsibilities to local governments means the local governments are authorized by the Division to review and approve the sewer extensions for construction. Sewer systems include: new systems, extensions to new areas and replacement sanitary sewers. Types of sewer systems are limited to: gravity sewers, force mains and pumping stations.

The Division hereby delegates the review the approval of all sewer systems within and tributary to the Clayton County Water Authority system with the following exclusions:

- Sewers greater than 36 inches in diameter.
- Pump stations with capacity greater than 700 gallons per minute.
- Sewer force mains greater than 36 inches in diameter.

2.0 PROCEDURES

In order to fulfill the terms of this agreement, the Clayton County Water Authority hereby agrees to enact procedures which will accomplish the following:

2.1 Determine that the water pollution control plant (WPCP) to which the proposed sewer extension will be tributary is capable of accepting the project wastewater for treatment.

2.2 Determine that the submain, principal sewer and interceptor to which the proposed sewers are tributary are capable of transporting the project wastewater to the WPCP for treatment.

2.3 Determine that the sewers are not constructed on or serving structures constructed or proposed to be constructed on solid waste landfills.

2.4 Determine that the proposed sewers have been designed by registered professionals in accordance with acceptable provisions of recognized design referenced in general use. References include: WEF Manual(s) of Practice, ASCE Manuals and Reports on Engineering Practice, Recommended Standards for Sewage Works, latest Edition, Great Lakes Upper Mississippi River Board of State Sanitary Engineers (10-State Standards), Environmental Protection Agency (EPA) Publications, WEF Journals and other technical publications widely recognized in establishing design standards.

2.5 Review and approve completed plans and specifications for technical adequacy and conformance to applicable requirements and determine that they are suitable for bid and construction purposes. Plans and specifications must be prepared by registered professionals in accordance with Code 4-3-15-2 of the Official Code of Georgia Annotated relating to the regulation and certification of professional engineers and land surveyors and in accordance with Georgia Rules and Regulations for Water Quality Control 391-3-6-.02. Construction specifications must be approved by the EPD prior to adopting as the Clayton County Water Authority's Standard Construction Specifications.

2.6 Ensure the reviews are performed under the supervision of a professional engineer registered in the State of Georgia.

2.7 Conduct construction inspections during construction to ensure that the construction is done in accordance with the approved plans and specifications and the Erosion and Sedimentation Act 12-7-1 et. seq. and all other related Acts and ordinances.

2.8 Ensure the construction inspections are performed under the supervision of a professional engineer registered in the State of Georgia.

2.9 Determine that the construction is done in accordance with approved plans and specifications prior to project acceptance.

2.10 Own and maintain the sewer system after project acceptance.

2.11 Maintain in a responsible manner, records and documentation of approved projects for EPD's overview.

2.12 Maintain an up-to-date set of sewer maps.

3.0 OVERVIEW

In order to ensure compliance with this agreement, the Clayton County Water Authority agrees to cooperate with the EPD in a joint overview effort to be conducted at annual intervals.

4.0 DISSOLUTION OF AGREEMENT

This agreement may be canceled without prior notice by the action of either party giving written notice of intent to cancel.

For the Georgia Environmental Protection Division

Date: 3/15/01

Harold F. Reheis, P.E.
Director

For the Clayton County Water Authority

Date: 3/13/01

M. Wade Brannan
General Manager

GEORGIA DEPARTMENT OF NATURAL RESOURCES

4220 International Parkway, Atlanta, Georgia 30354
Lonice C. Barrett, Commissioner
Harold F. Raheis, Director
David Word, Assistant Director
Environmental Protection Division
404/656-4713

Reply To:
Engineering & Technical Support Program
Suite 101
404/675-6233

March 15, 2001

Mr. Mike Thomas
Clayton County Water Authority
1600 Battle Creek Road
Morrow, Georgia 30260

RE: EPD Project No. 21139
Clayton County Water Authority
Sewer Review Delegation Agreement
Clayton County

Dear Mr. Thomas:

Enclosed is a copy of the executed sewer review delegation agreement for your files. We have retained the original for our files.

The delegation agreement requires an annual overview of the Clayton County Water Authority's performance in complying with the delegation. We will contact your staff to schedule the first overview in approximately one year.

If you should have any questions, please do not hesitate to contact this office.

Sincerely,
Mark Beebe

Mark Beebe, Engineer
Engineering & Technical Support Program

MB
h:/2001/21139
Enclosure

cc: EPD-Northwest Regional Office
ATTN: Mr. Jim Sommerville

G. Upon completion of construction, the water system owner must own and maintain the water lines.

H. All pertinent records and documentation of the approved projects must be maintained for EPD's overview, along with an up-to-date set of water system distribution maps.

I. The system owner's engineer must evaluate and determine the capability of the system's wastewater treatment facilities to support each water using facility that is added to the water system.

J. The system owner or the engineer must submit a yearly report to EPD each January, listing each addition approved during the previous year and the number of service connections within each addition.

Please notify this office of any changes in your engineer's status and/or in the submitted standard construction specifications. Should you have any questions, please contact this office at (404) 657-8283

Sincerely,

Sheila D. Pippin
Environmental Engineer
Drinking Water Permitting & Engineering Program

DELEGATION OF REVIEW AND APPROVAL FOR LIMITED WATER SYSTEM ADDITIONS

WATER SYSTEM NAME : Clayton County Water Authority COUNTY: Clayton
* Water System ID No. : 0630000

a) Does the water system has its own water supply sources: YES NO (circle one)
* b) Does the water system purchase water from another system(s): YES NO (circle one)
If YES, name the water suppliers: City of Atlanta, Dekalb Co., Fayette County
* High Demand Times Only

WATER SYSTEM'S ENGINEER/CONSULTANT:
Name: Capstone Engineering, Neal Spradlin, PE
Georgia PE Registration No: 23386
Address : 45 Little Road
Sharpsburg, GA 30277

Phone: 770-502-9748 Fax: 770-502-9748

TO EPD:

Enclosed is a copy of the Standard Construction and Material Specifications for the Georgia Environmental Protection Divisions's (EPD) review and approval. I request that the above named permitted public water supply system be granted permission for its engineer(s) to review and approve the construction of "limited" water system projects (subdivisions, apartment complexes and shopping centers, only) as additions to its existing permitted public water distribution system. These water system addition projects, which includes the water lines to connect these facilities to the existing permitted system's distribution lines are considered routine in nature. In the event that a proposed water system addition project has the potential for significant environmental impact or which generates substantial public concern, EPD still reserves the right to review that project. I understand that annual reporting of the approved projects is required.

During the review, approval and construction of the water system projects, steps will be taken to ensure that no part of the water mains, service lines, and the structures that they are going to be connected to these water lines are being located on or in close proximity to an abandoned landfill site or any other site used for waste disposal.

This delegation for review and approval of limited water system additions may be canceled without prior notice by the either party giving a written notice of intent to cancel.

FOR THE PUBLIC WATER SUPPLY SYSTEM (Authorized Representative)
Name (please print): M. Wade Branham Title: General Manager
Signature : M Wade Branham Date: 10/26/00

FOR THE DRINKING WATER PERMITTING & ENGINEERING PROGRAM, EPD
Name (please print): Sheila D Pippin Title: Environmental Engineer
Signature : Sheila D Pippin Date: 11-13-00

Appendix C Water Distribution / Sanitary Sewer Addition Submittal

The Developer/Owner or authorized representative shall provide the following information.

General Information

1. Project/Development name:_____

2. Developer's/Owner's name:_____

3. Developer's Engineer or Surveyor:_____

   Georgia P.E. No.:_____ Expiration Date:_____

   Georgia R.L.S. No.:_____ Expiration Date:_____

4. Proposed service area (acres): Immediate:_____Ultimate:_____

5. Type of Development (Check those that apply):

   Residential:_____ Commercial:_____ Industrial:_____ Other:_____

   (If other, explain)_____

6. List population to be served:_____ density/acre:_____

Water Distribution Information

1. List design water use for Development (gallons/day):_____

   (Provide Detail)_____

   _____

2. List pipe diameters, pipe material and pipe lengths:

   _____

   _____

3. List number of fire hydrants:_____

4. List number of valves:_____

5. List type, number and size of meters:_____

   _____

Appendix C Water Distribution / Sanitary Sewer Addition Submittal

Sanitary Sewer Information

1. Does or will the Development contain any of the following services (Check those that apply): Food Service:_____ Automotive Service:_____ Carwash Service:_____

   For checked services, provide proposed capacity of oil/grease interceptor and/or

   sand/grit interceptor to be installed (gallons):_____

   Existing and proposed Developments shall comply with the CCWA Grease Management Program, Sewer Use Ordinance Sections 98-7(F) and 98-7(G).

2. List average daily sewer usage rate (gallons/day):_____

   (Provide Detail)_____

   _____

3. If producing industrial wastewater, describe waste characteristics:

   _____

   Gallons/day produced:_____ Describe pretreatment received:_____

   _____

4. List sewer design flow (gallons/day): Average:_____Peak:_____

5. Design biochemical oxygen demand (BOD) (lbs/day): Average:_____

6. List pipe diameters, pipe material and pipe lengths:_____

   _____

   _____

7. List number of manholes:_____

8. List number and size of service connections:_____

   _____

   _____

Appendix C Water Distribution / Sanitary Sewer Addition Submittal

Lift Station Information

1. List number and size (Hp) of motors/pumps:_____

2. List pump operating duty point flow rate (gallons/minute):_____

3. List inside diameter of wet well (ft):_____

Force Main Information

1. List pipe diameter, pipe material and pipe length:_____

2. List flow velocity (feet/second):_____

3. List number and type of combination air/vacuum release valve(s):_____

   _____

Appendix C Water Distribution / Sanitary Sewer Addition Submittal

The Clayton County Water Authority shall provide the following information.

General Information

The CCWA shall certify the following statement.

"I certify that no component of a water distribution system or sanitary sewer system will be constructed on a solid waste landfill. In addition, no component of a water distribution system or sanitary sewer system will be constructed to serve structures that are constructed or proposed to be constructed on a solid waste landfill."

_____
(Signature)

Water Distribution Information

1. List the Water Production Plant (WPP) that will supply the development:_____

   _____

2. List the WPP's production capacity (gallons/day):_____

   Georgia EPD Permitted production capacity (gallons/day):_____

   List the latest twelve (12) month average production (gallons/day): _____

   _____

   _____

3. List known pressure and flow problems in proposed Development's immediate area:

   _____

4. Does the WPP have the capacity to supply the proposed development?
   Yes:_____ No:_____

Appendix C Water Distribution / Sanitary Sewer Addition Submittal

Sanitary Sewer Information

1. List the Water Reclamation Facility (WRF) that will service the development:

   _____

2. List the WRF's treatment capacity (gallons/day):_____

   Georgia EPD Permitted treatment capacity (gallons/day):_____

   List, by month, the average daily flow (MGD) and effluent concentrations (mg/l) for biochemical oxygen demands (BOD_5) and suspended solids (SS) for the immediately preceding 12 months for the wastewater (on discharge monitoring reports).

Month	Flow	BOD_5	SS	Month	Flow	BOD_5	SS	Month	Flow	BOD_5	SS

3. Does the listed WRF have the treatment capacity to service the proposed Development? Yes_____ No_____

4. Sewer Capacity

   List diameter (inches) of existing sewer main to receive development:_____

   List pipe material:_____

   List date pipe was installed:_____

   List maximum pipe flow capacity (gallons/day):_____

   List current pipe flow (gallons/day):_____

   List current I/I in pipe (gallons/day):_____

5. Does the existing sewer have the capacity to service the proposed development? Yes_____ No_____

Appendix D Technical Review Checklist

General Submittal Information

1. Development Name:_____

2. Water Distribution / Sanitary Sewer Addition Submittal form received: Yes_____ No_____
   (Plan review shall not begin until the submittal form is received.)

3. Have copies of DOT / Utility rights-of-way permits and drawings been received:
   Yes _____ No _____ NA_____
   (Plans shall not be approved until all DOT / Utility rights-of-way permits and drawings are received.)

4. Have all off-site easements been received: Yes _____ No _____ NA_____
   (Plans shall not be approved until all off-site easements are received.)

5. Has a copy of the Soil and Water Technical review been received from Clayton County T & D or the Georgia Soil and Water Conservation Commission: Yes_____ No_____ NA_____
   (Plans shall not be approved until a copy of the Soil and Water Technical review is received.)

Notes to Design Engineer

1. Two (2) sets of plans are required to initiate the plan review process.

2. Four (4) sets of plans are required for plan approval.

3. Items marked “No” shall be submitted and/or corrected as indicated on checklist.

4. Items marked (redlined) on the plans shall be submitted and/or corrected as indicated.

5. Items marked “Yes” or “NA” (Not Applicable) require no further action.

6. Return redlined plans with each re-submittal.

7. As-built drawing shall be provided in digital format (Autocad 14 or as amended by the CCWA) and one (1) reproducible hard copy.

_____ _____
Review by Engineering Date

_____ _____
Review by Maintenance & Construction Date

_____ _____
Review by General Services Date

Comments_____

_____

_____

Appendix D Technical Review Checklist

General Plan Set Submittal Requirements

1. Yes____ No____: Two (2) sets of plans submitted.
2. Yes____ No____: Plans submitted with Cover Sheet.
3. Yes____ No____: Utility Locate Note on every sheet including the cover sheet.
4. Yes____ No____: Site Plan submitted showing the overall Development including all phases.
5. Yes____ No____ NA____: Grading Plan submitted.
6. Yes____ No____ NA____: Storm Water System Plan submitted.
7. Yes____ No____ NA____: Water Distribution System Plan submitted.
8. Yes____ No____ NA____: Water Distribution System Details and construction notes on separate sheet.
9. Yes____ No____ NA____: Sanitary Gravity Sewer System Plan submitted.
10. Yes____ No____ NA____: Sanitary Gravity Sewer System Profile submitted.
11. Yes____ No____ NA____: Sanitary Gravity Sewer System Details and construction notes submitted on separate sheet.
12. Yes____ No____ NA____: Lift Station Site Plan submitted.
13. Yes____ No____ NA____: Lift Station Electrical Site Plan submitted.
14. Yes____ No____ NA____: Lift Station Details and construction notes submitted.
15. Yes____ No____ NA____: Force Main Plan and Profile submitted
16. Yes____ No____ NA____: Force Main Details and construction notes submitted
17. Yes____ No____ NA____: Soil Erosion and Sedimentation Control Plan submitted.
18. Yes____ No____ NA____: Soil Erosion and Sedimentation Control Details and construction notes submitted.
19. Yes____ No____: Design Engineer/Surveyor seal with their signature across seal on every sheet including detail sheets. Note: Surveyor for residential on-site work only.

Comments_____

_____

_____

Appendix D Technical Review Checklist

Cover Sheet Requirements

1. Yes____ No____: Project Title shown.
2. Yes____ No____: Developer/Owner name, address, telephone and fax number shown.
3. Yes____ No____: Design Engineer name, address, telephone and fax number shown.
4. Yes____ No____: Name and telephone number of 24-hour Contact Person shown.
5. Yes____ No____: Source of Project Funding, agency name and project number shown.
6. Yes____ No____: Detailed Project Site Location Map with street names and North Arrow shown.
7. Yes____ No____: Drawing Sheet Index shown.
8. Yes____ No____ NA____: Symbol Legend shown.
9. Yes____ No____: Land Lot(s), District and County shown.

Site Plan Sheet Requirements

1. Yes____ No____: North Arrow shown.
2. Yes____ No____ NA____: Symbol legend shown.
3. Yes____ No____: Drawing scale shown.
4. Yes____ No____: Drawing to scale as shown.
5. Yes____ No____: Property owners' names adjacent to Development shown.
6. Yes____ No____: Number of lots or development units shown.

Comments_____

_____

_____

Appendix D Technical Review Checklist

Water Distribution System Plan Sheet Requirements

1. Yes____ No____ NA____: Following statement included in water distribution system and/or sanitary sewer system notes: "The water distribution system and/or sanitary sewer system shall be installed in accordance with the approved plans and specifications contained within the CCWA document titled, *Standard Specifications for Water Distribution Systems and Sanitary Sewer Systems*, Latest Edition.

2. Yes____ No____ NA____: Plans indicated prepared using the following state plane coordinate system. Horizontal: NAD 83/94, Vertical: NGVD 88, Grid Zone: GA West 1002.

3. Yes____ No____: North Arrow shown.

4. Yes____ No____: Drawing scale shown.

5. Yes____ No____: Drawing to scale as shown.

6. Yes____ No____ NA____: Symbol legend shown.

7. Yes____ No____ NA____: Grading Plan shown in gray scale.

8. Yes____ No____ NA____: Storm Water System Plan shown in gray scale.

9. Yes____ No____: Street(s) right(s)-of-way shown.

10. Yes____ No____ NA____: 100-year flood plain contour and associated elevation shown.

11. Yes____ No____ NA____: 25-foot State Waters Buffer shown.

12. Yes____ No____ NA____: 50-foot State Water Quality Critical Area shown.

13. Yes____ No____ NA____: Wetlands area shown.

14. Yes____ No____ NA____: The proposed system is not situated on a legally or illegally established landfill.

15. Yes____ No____ NA____: The proposed system will not service a structure situated over a legally or illegally established landfill.

.

Comments_____

_____

_____

Appendix D Technical Review Checklist

Water Distribution System Requirements

1. Yes____ No____: Existing water main route shown and correct.

2. Yes____ No____: Existing water main pipe size shown and correct.

3. Yes____ No____ NA____: Proposed water main/distribution system route shown.

4. Yes____ No____ NA____: Proposed water design usage rate indicated for each connection.

5. Yes____ No____ NA____: Structures requiring fire sprinkler systems are indicated.

6. Yes____ No____ NA____: Fire sprinkler system design usage rate indicated.

7. Yes____ No____ NA____: Connecting location of Development's proposed water main to existing water main shown and correct.

8. Yes____ No____ NA____: Connecting location of Development's proposed single service connection to existing water main shown and correct.

9. Yes____ No____ NA____: Note stating "Tapping saddle and tapping gate valve for connection to existing water main to be provided and installed by Developer. CCWA to core tap for a fee of $325.00." shown.

10. Yes____ No____ NA____: Proposed bore location(s) shown and correct.

11. Yes____ No____ NA____: Proposed bore casing type, size, thickness and length shown and correct.

12. Yes____ No____ NA____: Proposed water main located on north and/or east side(s) of street(s) and inside right(s)-of-way.

13. Yes____ No____ NA____: Proposed water main pipe size, pipe material and pipe class shown and correct.

14. Yes____ No____ NA____: Proposed water main depth indicated and correct.

15. Yes____ No____ NA____: Proposed water main separated from sanitary sewer as follows. Horizontal separation: 10 foot min. Vertical separation: 18 inch min.

16. Yes____ No____ NA____: Total length of pipe indicated and correct.

Comments_____

_____

_____

Appendix D Technical Review Checklist

17. Yes____ No____ NA____: Total number of fire hydrants indicated and correct.

18. Yes____ No____ NA____: Note stating "Water main pipe shall not be installed until curb and gutter is installed." shown.

19. Yes____ No____ NA____: Proposed water meter/backflow assembly and associated easement for single service shown and correct. 20 ft by 30 ft minimum easement if assembly not within street right-of-way.

20. Yes____ No____ NA____: Proposed fire meter/backflow assembly and associated easement for single service shown and correct. 20 ft by 30 ft minimum easement if assembly not within street right-of-way.

21. Yes____ No____: Structure(s) not within proposed easement(s). Structures shall not be located in any easement.

22. Yes____ No____ NA____: Proposed service connection(s) location(s) to proposed water main shown and correct.

23. Yes____ No____ NA____: Note indicating "Water service connections to water main and service lines to be installed by the Developer".

24. Yes____ No____ NA____: Existing fire hydrant(s) shown and location(s) correct.

25. Yes____ No____ NA____: Proposed fire hydrant(s) shown and location(s) correct.

26. Yes____ No____ NA____: Proposed fire hydrant(s) spacing correct as measured along edge of pavement and as follows. Residential maximum spacing: 500 feet, Commercial maximum spacing: 300 feet.

27. Yes____ No____ NA____: Proposed fire hydrant in cul-de-sac shown and location correct.

28. Yes____ No____ NA____: Gate valves shown and valve size correct at proposed fire hydrants.

29. Yes____ No____ NA____: Proper hydrant lead pipe size, pipe material and pipe class from water main.

30. Yes____ No____ NA____: Proper location and number of valves at proposed main intersections shown.

31. Yes____ No____ NA____: Underground Utilities Locations Detail shown and conforms to CCWA requirements.

32. Yes____ No____ NA____: Long Side Service Detail shown and conforms to CCWA requirements.

Comments_____

_____

_____

Appendix D Technical Review Checklist

33. Yes____ No____ NA____: Fire Hydrant Detail shown and conforms to CCWA requirements.

34. Yes____ No____ NA____: Fire Hydrant in Cul-de-sac Detail shown and conforms to CCWA requirements.

35. Yes____ No____ NA____: Valve Box Detail shown and conforms to CCWA requirements.

36. Yes____ No____ NA____: Pipe Depth at Edge of Pavement Detail shown and conforms to CCWA requirements.

37. Yes____ No____ NA____: Pipe Bedding Detail shown and conforms to CCWA requirements.

38. Yes____ No____ NA____: Thrust Block Dimensions Detail shown and conforms to CCWA requirements.

39. Yes____ No____ NA____: Thrust Restraint at Fitting Detail shown and conforms to CCWA requirements.

40. Yes____ No____ NA____: Residential Water Meter and Meter Box Detail shown and conforms to CCWA requirements.

41. Yes____ No____ NA____: Commercial Domestic Water Meter Detail shown and conforms to CCWA requirements.

42. Yes____ No____ NA____: Fire Meter Detail shown and conforms to CCWA requirements.

43. Yes____ No____ NA____: Combination Domestic/Fire Water Meter Detail shown and conforms to CCWA requirements.

44. Yes____ No____ NA____: Water Meter Vault Detail shown and conforms to CCWA requirements.

Comments_____

_____

_____

Appendix D Technical Review Checklist

Sanitary Gravity Sewer System Plan Sheet Requirements

1. Yes____ No____ NA____: Following statement included in water distribution system and/or sanitary sewer system notes: "The water distribution system and/or sanitary sewer system shall be installed in accordance with the approved plans and specifications contained within the CCWA document titled, *Standard Specifications for Water Distribution Systems and Sanitary Sewer Systems*, Latest Edition.
2. Yes____ No____ NA____: Plans indicated prepared using the following state plane coordinate system. Horizontal: NAD 83/94, Vertical: NGVD 88, Grid Zone: GA West 1002.
3. Yes____ No____: North Arrow shown.
4. Yes____ No____: Drawing scale shown.
5. Yes____ No____: Drawing to scale as shown.
6. Yes____ No____ NA____: Symbol legend shown.
7. Yes____ No____ NA____: Grading Plan shown in gray scale.
8. Yes____ No____ NA____: Storm Water System Plan shown in gray scale.
9. Yes____ No____ NA____: Street(s) right(s)-of-way shown.
10. Yes____ No____ NA____: Existing easement(s) shown.
11. Yes____ No____ NA____: Proposed easement(s) shown.
12. Yes____ No____ NA____: 100-year flood plain contour and associated elevation shown.
13. Yes____ No____ NA____: 25-foot State Waters Buffer shown.
14. Yes____ No____ NA____: 50-foot State Water Quality Critical Area shown.
15. Yes____ No____ NA____: Wetlands area shown.
16. Yes____ No____ NA____: The proposed system is not situated on a legally or illegally established landfill.
17. Yes____ No____ NA____: The proposed system will not service a structure situated over a legally or illegally established landfill.

Comments_____

_____

_____

Appendix D Technical Review Checklist

Sanitary Gravity Sewer System Requirements

1. Yes____ No____: Existing sanitary gravity sewer system route shown and correct.

2. Yes____ No____: Existing sanitary sewer gravity main size shown and correct.

3. Yes____ No____ NA____: Proposed Development with food service facility, car wash, and/or auto repair facility shown with grease/grit/oil interceptor. If yes or no, plans are to be reviewed by CCWA Environmental Compliance.

4. Yes____ No____ NA____: Proposed sanitary sewer gravity main route shown.

5. Yes____ No____ NA____: Connecting location of Development's proposed sanitary gravity sewer main to existing sanitary sewer manhole shown and correct.

6. Yes____ No____ NA____: Connecting location of Development's proposed sanitary gravity sewer main to existing sanitary gravity sewer main via "dog house" manhole shown and correct.

7. Yes____ No____ NA____: Connecting location of Development's proposed sanitary single service lateral connection (< 250 ft) to existing sanitary sewer manhole shown and correct.

8. Yes____ No____ NA____: Connecting location of Development's proposed sanitary single service lateral connection to existing sanitary gravity sewer main via tapping saddle shown and correct.

9. Yes____ No____ NA____: Proposed bore location(s) shown and correct.

10. Yes____ No____ NA____: Proposed bore casing type, size and length shown and correct.

11. Yes____ No____ NA____: Proposed sanitary single service lateral routes shown and less than 250 ft.

12. Yes____ No____ NA____: Proposed sanitary gravity sewer main located at the centerline of the street(s) right(s)-of-way and/or easement(s).

13. Yes____ No____ NA____: Proposed sanitary gravity sewer main pipe size, pipe material and pipe class shown and correct.

14. Yes____ No____: Structure(s) not within proposed easement(s). Structures shall not be located in any easement.

Comments_____

_____

_____

Appendix D Technical Review Checklist

15. Yes____ No____: Proposed sanitary sewer does not cross a lake, reservoir, pond or detention pond.

16. Yes____ No____: Proposed sanitary sewer does not cross over a water distribution main.

17. Yes____ No____ NA____: Proposed dumpster pad drain does not discharge to sanitary sewer system.

18. Yes____ No____ NA____: Slope of sewers between manholes shown and are calculated correctly.

19. Yes____ No____ NA____: Slopes of sewers are within minimum and maximum CCWA specifications.

20. Yes____ No____ NA____: Ending sewer tangent(s) slopes are = or > 1.00%.

21. Yes____ No____ NA____: Angle between influent and effluent sewers at manhole = or > 90º.

22. Yes____ No____ NA____: Ductile iron pipe used at depths less than 4 feet and greater than 15 feet.

23. Yes____ No____ NA____: Ductile iron pipe used over and under storm water sewers and water distribution piping.

24. Yes____ No____ NA____: Proposed sanitary sewer separated from water main as follows. Horizontal separation: 10 foot min. Vertical separation: 18 inch min.

25. Yes____ No____ NA____: A minimum coverage of 2 feet of soil exists when crossing a stream.

26. Yes____ No____ NA____: A minimum coverage of 2 feet of soil exists when crossing a ditch.

27. Yes____ No____ NA____: Flow arrows are shown along the proposed sewer main.

28. Yes____ No____: Existing manholes labeled.

29. Yes____ No____ NA____: Proposed manholes numbered correctly.

30. Yes____ No____ NA____: Sewer stubs to service adjacent properties shown.

30. Yes____ No____ NA____: Manhole cover elevations shown and accurate to vertical scale.

31. Yes____ No____ NA____: Manhole cover in paved area indicated to be set flush with finished pavement.

Comments_____

_____

_____

Appendix D Technical Review Checklist

32. Yes____ No____ NA____: Manhole cover in non-paved area indicated to be set a minimum of 12 inches above finished grade.

33. Yes____ No____ NA____: Manhole cover in 100-yr flood plain above flood plain elevation or cover shown as being with gasket and bolted down.

34. Yes____ No____ NA____: Manholes not situated in detention pond.

35. Yes____ No____ NA____: Manhole spacing is = or < 400 feet.

36. Yes____ No____ NA____: Manhole inlet and outlet invert elevations shown.

37. Yes____ No____ NA____: Inlet and outlet elevations accurate and accurate to vertical scale.

38. Yes____ No____ NA____: No inside drop manholes (by CCWA Engineer Approval Only)

39. Yes____ No____ NA____: No outside drop manholes (by CCWA Engineer Approval Only).

40. Yes____ No____ NA____: No dog house style manholes (by CCWA Engineer Approval Only)

41. Yes____ No____ NA____: Is the following note indicated: ”Detection tape or wire shall be installed above all non-ferrous pipe and all ferrous pipe having a bury depth of six (6) feet or more. Mylar detection tape or ferrous wire shall be installed two (2) feet below finished grade such that sewer and/or lateral can be detected after burial.”

42. Yes____ No____ NA____: Pipe Bedding Detail shown and conforms to CCWA requirements.

43. Yes____ No____ NA____: Sewer Service Connection Detail shown and conforms to CCWA requirements.

44. Yes____ No____ NA____: Manhole Sections Detail shown and conforms to CCWA requirements.

Comments_____

_____

_____

Appendix D Technical Review Checklist

Lift Station Requirements

1. Yes____ No____: Lift station site area shown on sanitary sewer system plan sheet and site location acceptable.

2. Yes____ No____: Access road to lift station site area shown on sanitary sewer system plan sheet and acceptable.

3. Yes____ No____: Sanitary sewer route to lift station site area shown on sanitary sewer system plan sheet and acceptable.

4. Yes____ No____: Lift station force main route shown on sanitary sewer system plan sheet and acceptable.

5. Yes____ No____: Potable water supply route to lift station site area shown on sanitary sewer system plan sheet and acceptable.

5. Yes____ No____: Potable water supply pipe is situated a minimum of 10 feet from the gravity sanitary sewer and sewer force main route.

6. Yes____ No____: Electrical service route to lift station site area shown on sanitary sewer system plan sheet and acceptable.

7. Yes____ No____: Electrical service to lift station site shown as being overhead or underground and 3-phase power.

8. Yes____ No____ NA____: The proposed system is not situated on a legally or illegally established landfill.

9. Yes____ No____ NA____: The proposed system will not service a structure situated over a legally or illegally established landfill.

10. Yes____ No____ NA____: Lift Station electrical and mechanical components are situated above the 100-year flood elevation.

11. Yes____ No____: Radio path survey and SCADA recommendations submitted and approved.

12. Yes____ No____: Lift station site plan submitted and drawn to scale.

13. Yes____ No____: A minimum 40-foot by 40-foot site area is shown for the lift station.

14. Yes____ No____: A minimum 60-foot by 60-foot easement area is shown for the lift station.

Comments_____

_____

_____

15. Yes____ No____: Edge of easement area extends 10 feet beyond all sides of the site area (i.e. if site area is 40 feet by 45 feet, then easement area is 60 feet by 65 feet).

16. Yes____ No____: A minimum 12 foot wide paved access road is shown.

17. Yes____ No____: A minimum 20 foot wide easement is shown for the access road.

18. Yes____ No____: Lift station enclosure situated a minimum of 5-feet from fence and location within site area acceptable.

19. Yes____ No____: Lift station concrete slab dimensions shown and acceptable.

20. Yes____ No____: Emergency generator situated a minimum of 5-feet from fence and location within site area acceptable.

21. Yes____ No____: Emergency generator concrete slab dimensions shown and acceptable.

22. Yes____ No____: SCADA tower situated a minimum of 5-feet from fence and location within site area acceptable.

23. Yes____ No____: SCADA tower and mast height indicated on plan.

24. Yes____ No____: Potential surrounding houses will not interfere with radio signal path.

25. Yes____ No____: Electrical stand situated a minimum of 5-feet from fence and location within site area acceptable.

26. Yes____ No____: Area security light location within site area acceptable.

27. Yes____ No____: Yard hydrant location within site area acceptable.

28. Yes____ No____ NA____: Ground elevation is shown and is the same along the edges of the site.

29. Yes____ No____: Lift station site area shown with gravel and sloped away from wet well in accordance with CCWA requirements.

30. Yes____ No____: Site area enclosed with 6-foot high fence with 12-foot double swing gate.

31. Yes____ No____: Plug valve shown in force main shown and within fenced site area.

32. Yes____ No____: Area between fence and edge of easement landscaped and materials acceptable.

Comments_____

_____

_____

Appendix D Technical Review Checklist

33. Yes____ No____: Electrical site plan submitted and drawn to scale.

34. Yes____ No____: Underground conduit routes to lift station components shown.

35. Yes____ No____: Below grade conduit shown as being rigid, schedule 40 PVC or galvanized steel.

36. Yes____ No____: At grade and above grade conduit shown as being galvanized steel.

37. Yes____ No____: Lift station pumps and housing detail submitted and conforms to CCWA requirements.

38. Yes____ No____: Pump size and motor horsepower indicated on lift station pumps and housing detail.

39. Yes____ No____: Total Dynamic Head calculation submitted and correct.

40. Yes____ No____: Net Positive Suction Head Required and Net Positive Suction Head Available calculations submitted and correct.

41. Yes____ No____: Lift station system's operating curve plotted onto manufactures' pump performance curve.

42. Yes____ No____: A minimum 6-foot diameter wet well provided for lift station and shown on lift station wet well detail that conforms to CCWA requirements.

43. Yes____ No____ NA____: Wet well buoyancy calculation submitted and correct.

44. Yes____ No____: Lift station cycle time calculation submitted and each pump operates for 2 (two) to 5 (five) minutes per cycle and each pump starts/stops 3 to 5 times per hour.

45. Yes____ No____: Lead Pump On elevation shown and correct on lift station wet well detail that conforms to CCWA requirements.

46. Yes____ No____: Lead Pump Off/Lag Pump Off elevation shown and correct on lift station wet well detail that conforms to CCWA requirements.

47. Yes____ No____: High Water Alarm/Lag Pump On elevation shown and correct on lift station wet well detail that conforms to CCWA requirements.

48. Yes____ No____: Generator kilowatt rating calculation shown and correct.

49. Yes____ No____: Generator transfer switch amp rating shown and correct.

Comments_____

_____

_____

Appendix D Technical Review Checklist

50. Yes____ No____: SCADA tower base detail shown and conforms to CCWA requirements.

51. Yes____ No____: Electrical panel stand detail shown and conforms to CCWA requirements.

52. Yes____ No____: Lift station by-pass valve configuration detail shown.

53. Yes____ No____: Lift Station Pump and Housing Detail shown and conforms to CCWA requirements.

54. Yes____ No____: Lift Station Wet Well Detail shown and conforms to CCWA requirements.

55. Yes____ No____: Lift Station Wet Well Detail shown and conforms to CCWA requirements.

56. Yes____ No____: Wet well lining material indicated.

57. Yes____ No____: Yard Hydrant Detail shown and conforms to CCWA requirements.

58. Yes____ No____: Chain Link Fence Detail shown and conforms to CCWA requirements.

Comments_____

_____

_____

Appendix D Technical Review Checklist

Force Main

1. Yes____ No____: Proposed force main route shown and acceptable.
2. Yes____ No____: Proposed force main 20 foot easement shown.
3. Yes____ No____: Structure(s) not within proposed easement(s). Structures shall not be located in any easement.
4. Yes____ No____: Force main depth indicated and correct.
5. Yes____ No____: Force main profile shown and correct.
6. Yes____ No____: Proper location and minimum spacing of combination air/vacuum release valve(s).
7. Yes____ No____: Proper type, size and model number of combination air/vacuum release valve(s) indicated.
8. Yes____ No____: Proposed discharge point shown.
9. Yes____ No____ NA____: Proposed bore location(s) shown and correct.
10. Yes____ No____ NA____: Proposed bore casing type, size and length shown and correct.
11. Yes____ No____: Proposed force main pipe size, pipe material and pipe class shown and correct.
12. Yes____ No____: Pipe Depth at Edge of Pavement Detail shown and conforms to CCWA requirements.
13. Yes____ No____: Pipe Bedding Detail shown and conforms to CCWA requirements.
14. Yes____ No____: Thrust Block Dimensions Detail shown and conforms to CCWA requirements.
15. Yes____ No____ NA____: Thrust Restraint at Fitting Detail shown and conforms to CCWA requirements.
16. Yes____ No____ NA____: Combination Air/Vacuum Release Valve shown and conforms to CCWA requirements.
17. Yes____ No____ NA____: Manhole at force main discharge point and next downstream manhole shown to be lined or coated.

Comments_____

_____

_____

Appendix E ***Inspection Report***

Development Name: _____

Contractor Name: _____

1. Has a copy of the Utility Contractor's License been received by the CCWA Engineer?

   Yes_____ No _____, If No, Stop Work.

2. Is work being performed in accordance with the plans and specifications?

   Yes_____ No _____, If No, List the deficiencies below.

3. Are all erosion control and sedimentation measures associated with work in accordance with the plans and specifications?

   Yes_____ No _____, If No, Notify CCTD.

4. Have easements for off-site work been submitted to CCWA Engineer?

   Yes_____ No _____, If No, work shall not be permitted on off-site properties.

_____

_____

_____

_____

_____

_____

_____

_____

_____

_____

_____

CCWA Inspector Signature:_____ Date:_____

Appendix F *Mandrel Test Report*

Development Name: _____

Contractor Name: _____

Note: Testing shall be performed when section of pipeline being tested has been completely backfilled and all compaction requirements have been met.

Does the CCWA have soil compaction test results? Yes_____ No _____

Indicate inside diameter of pipe being tested. _____

Indicate outside diameter of mandrel being used. _____

Is mandrel size in accordance with size specification? Yes_____ No _____

Date	From Station No. / To Station No.	Mandrel Test Accepted (Yes / No)
_____	_____/_____	_____
_____	_____/_____	_____
_____	_____/_____	_____
_____	_____/_____	_____
_____	_____/_____	_____
_____	_____/_____	_____
_____	_____/_____	_____
_____	_____/_____	_____

If Mandrel Test not accepted, list station numbers and describe actions to correct deflected pipe. _____

_____

CCWA Inspector Signature:_____ Date:_____

Appendix F ***Pressure Test Report***

Development Name: _____

Contractor Name: _____

Note: Testing shall be performed when section of pipeline being tested has been completely backfilled and all compaction requirements have been met.

Does the CCWA have soil compaction test results? Yes_____ No _____

Indicate type of system being tested (Water Distribution/Gravity Sewer/Force Main)

Indicate test pressure (psi) _____

Date	From Station No. / To Station No.	Pressure Test Accepted (Yes / No)
_____	_____/_____	_____
_____	_____/_____	_____
_____	_____/_____	_____
_____	_____/_____	_____
_____	_____/_____	_____
_____	_____/_____	_____
_____	_____/_____	_____
_____	_____/_____	_____
_____	_____/_____	_____

If Pressure Test not accepted, describe actions to correct pipe or joint. _____

_____

_____

CCWA Inspector Signature:_____ Date:_____

Appendix F ***Visual Test Report***

Development Name: _____

Contractor Name: _____

Note: Testing shall be performed when section of pipeline being tested has been completely backfilled and all compaction requirements have been met.

Does the CCWA have soil compaction test results? Yes_____ No _____

Attach TV Testing Report by subcontractor to this report.

Date	From Station No. / To Station No.	Visual Test Accepted (Yes / No)
_____	_____/_____	_____
_____	_____/_____	_____
_____	_____/_____	_____
_____	_____/_____	_____
_____	_____/_____	_____
_____	_____/_____	_____
_____	_____/_____	_____
_____	_____/_____	_____
_____	_____/_____	_____
_____	_____/_____	_____

If Visual Test not accepted, list station numbers and describe actions to correct pipe or joint.

_____

_____

CCWA Inspector Signature:_____ Date:_____

Appendix G Sewer Construction Acceptance Letter

Date

Developer
Street Address
City, State Zip Code

Dear Developer:

This letter will serve as notice that the sanitary sewer as built by Contractor in the development known as Name, Land Lot # of the #th District, Clayton County, Georgia, meets all specifications and sewer construction methods of Clayton County Water Authority.

Upon request for a final inspection, the said sanitary sewer will be accepted by the Authority for maintenance after paving of the streets and all manholes are set to finished grade of the street and free of debris. No sewage shall be permitted in said lines until a final letter of acceptance is obtained from this office. Please complete and return the appropriate attached forms for the owner's affidavit, the easement form, the contractor's affidavit, and the project value before requesting the final inspection.

Until the Authority gives the final letter, the developer will be responsible for any type of maintenance to the sanitary sewer system.

Sincerely,

CCWA Manager
Program Management and Engineering

CCWA Inspector
Program Management and Engineering

cc: Maintenance and Construction, CCWA

Appendix G Water Construction Acceptance Letter

Date

Developer
Street Address
City, State Zip Code

Dear Developer:

This letter will serve as notice that the water system as built by Contractor, in the subdivision known as Name, Land Lot # of the #th District, Clayton County, Georgia, meets all specifications and water construction methods of Clayton County Water Authority.

Upon request for a final inspection, the said water distribution system will be accepted by the Authority for maintenance after paving of the streets and all valves and hydrants are set to finished grade of the street or shoulder. No water meter will be installed until a letter of final acceptance is obtained from this office.

Until the Authority gives the final letter, the developer will be responsible for any type of maintenance to the water distribution system.

Sincerely,

CCWA Manager
Program Management and Engineering

CCWA Inspector
Program Management and Engineering

cc: Maintenance and Construction, CCWA

Appendix H Final Lift Station Inspection Report

Development Name: _____

Contractor Name: _____

Lift Station

1. Has a manufacturer's representative inspected and approved the lift station? Yes ____ No ____. If yes, attach the manufacturer's approval inspection and testing report.

2. Is wet well, underside of lift station slab and pipe penetrations lined with an approved liner? Yes ____ No ____.

3. Has a manufacturer's representative inspected and approved the wet well lining? Yes ____ No ____. If yes, attach the manufacturer's approval inspection report.

4. Are suction lines and appropriate elbows properly installed and grouted to the wet well floor? Yes ____ No ____

5. Are pump control "On" and "Off" elevations in accordance with the approved plans? Yes ____ No ____.

6. Is the enclosure a minimum 5 ft from the fence? Yes ____ No ____.

Electrical

1. Is the above grade electrical conduit rigid galvanized tubing? Yes ____ No ____.

2. Are the above grade electrical conduit horizontal runs less than 12 inches and supported by galvanized unistrut? Yes ____ No ____.

3. Are all electrical and SCADA panels secured to a common stand (galvanized)? Yes ____ No ____.

4. Has a manufacturer's representative inspected and approved the generator? Yes ____ No ____. If yes, attach the manufacturer's approval inspection and testing report.

5. Is the generator securely anchored to the slab? Yes ____ No ____.

6. Has a manufacturer's representative inspected and approved the SCADA system? Yes ____ No ____. If yes, attach the manufacturer's approval inspection and testing report.

7. Is the tower a minimum 5 ft from the fence? Yes ____ No ____.

8. Has the proper security lighting been installed and tested? Yes ____ No ____.

Site Area

1. Is the overall site area a minimum of 60 feet by 60 feet? Yes ____ No ____.

2. Is the fenced area a minimum 40 feet by 40 feet? Yes ____ No ____.

3. Is the site area graded in conformance with the approved plans and in a manner that storm water will flow away from the wet well?
   Yes ____ No ____.

4. Is the area within the fence covered with a geofabric and a minimum of 6 inches of R-2 size stone? Yes ____ No ____.

5. Does the yard hydrant meet specifications? Yes ____ No ____.

6. Does the fence and 12-foot swing gate meet specifications? Yes ____ No ____.

7. Is a 10-foot wide area beyond all sides of the fence landscaped with evergreen shrubbery, weed guard fabric and mulch? Yes ____ No ____.

8. Is the access road in accordance with the approved plans? Yes ____ No ____.

9. Is a meter and backflow device set in the right-of-way for the service water?
   Yes ____ No ____.

Force Main

1. Is a plug valve installed in the force main and situated within the fenced area?
   Yes ____ No ____.

2. Is the combination air/vacuum release valve the correct model? Yes ____ No ____.

3. Does the combination air/vacuum release valve function properly during force main operation? Yes ____ No ____.

4. Is the manhole that receives the force main discharge and the next downstream manhole coated with an approved coating system. Yes ____ No ____.

5. Has a manufacturer's representative inspected and approved the manhole coatings? Yes ____ No ____. If yes, attach the manufacturer's approval inspection report.

Are all lift station components functioning properly and site area complete and ready to be accepted by Clayton County Water Authority?

Yes_____ No_____ If no, List Reasons_____

_____

CCWA Inspector:_____ Date:_____

CCWA General Services:_____ Date:_____

Appendix H ***Final Sewer Inspection Report***

Development Name: _____

Contractor Name: _____

1. Have the following sewer tests been passed on all sections of the system:

   Visual: Yes ____ No ____; Mandrel: Yes____ No ____; Air Pressure: Yes ____ No ____

2. Is all road pavement over sewers complete: Yes _____ No _____

3. Are all crossings and valves identified by saw-cuts in the curb: Yes_____ No_____

4. Are all manhole covers flush with pavement: Yes _____ No _____

   (If No, List Station No.s _____, _____, _____, _____, _____, _____, _____)

5. Are all manhole covers of correct size and weight: Yes _____ No _____

   (If No, List Station No.s _____, _____, _____, _____, _____, _____, _____)

6. Is the word "SEWER" cast into all manhole covers: Yes _____ No _____

   (If No, List Station No.s _____, _____, _____, _____, _____, _____, _____)

6. Are all manhole sections in good condition without cracks: Yes _____ No _____

   (If No, List Station No.s _____, _____, _____, _____, _____, _____, _____)

7. Are all manhole inverts complete with smooth transition: Yes _____ No _____

   (If No, List Station No.s _____, _____, _____, _____, _____, _____, _____)

8. Are all manhole inverts free from dirt and debris: Yes ____ No ____

   (If No, List Station No.s _____, _____, _____, _____, _____, _____, _____)

9. Are all manhole steps properly installed and spaced: Yes ____ No ____

   (If No, List Station No.s _____, _____, _____, _____, _____, _____, _____)

Is the sewer system ready to be accepted by the Clayton County Water Authority?

Yes _____ No _____ If No, List Reasons _____

_____

If yes, have all sewer line plugs been removed: Yes ____ No ____

CCWA Inspector Signature:_____ Date:_____

Appendix H ***Final Water Inspection Report***

Development Name: _____

Contractor Name: _____

Water Main

1. Have the following water tests been passed on all sections of the system:

   Pressure Tests: Yes_____ No_____ Disinfection: Yes_____ No_____

2. Is all road pavement over water system complete: Yes_____ No_____
3. Are all hydrants and valves at curb grade: Yes_____ No_____
4. Are all crossings and valves identified by saw-cuts in the curb: Yes_____ No_____
5. Are the water services installed correctly: Yes_____ No_____
6. Are all the meter boxes set to grade: Yes _____ No_____
7. Are all the valves on hydrants and in-line valves on: Yes_____ No_____

Meters Vaults

1. Are vaults the correct size: Yes_____ No_____
2. Do vaults have a concrete base with drain: Yes_____ No_____
3. Are access hatches the correct size and material: Yes_____ No_____
4. Do the vault lids have 4 lifting points: Yes_____ No_____
5. What type of meter is installed: Fire _____ Domestic _____ Combination_____
6. Is double check valve an approved model: Yes_____ No_____

Is the water system ready to be accepted by Clayton County Water Authority?

Yes_____ No_____ If no, List Reasons_____

_____

CCWA Inspector:_____ Date:_____

Appendix I ***Final Sewer Acceptance Letter***

Date

Developer
Street Address
City, State Zip Code

Dear Developer:

This letter will serve as notice that the sanitary sewer as built by Contractor in the development known as Name, Land Lot # of the #th District, Clayton County, Georgia, has been accepted by Clayton County Water Authority for permanent maintenance and operation. We appreciate your cooperation in this matter.

If you have any questions or comments, please call me at 770-960-5248.

Sincerely,

CCWA Manager
Program Management and Engineering

CCWA Inspector
Program Management and Engineering

cc: Maintenance and Construction, CCWA

Appendix I ***Final Water Acceptance Letter***

Date

Developer
Street Address
City, State Zip Code

Dear Developer:

This letter will serve as notice that the water system as built by Contractor in the development known as Name, Land Lot # of the #th District, Clayton County, Georgia, has been accepted by Clayton County Water Authority for permanent maintenance and operation. We appreciate your cooperation in this matter.

If you have any questions or comments, please call me at 770-960-5248.

Sincerely,

CCWA Manager Program Management and Engineering	CCWA Inspector Program Management and Engineering

cc: Maintenance and Construction, CCWA

AMENDMENT NO. 1 to the Above Referenced Specifications.

Approval Date: 18 April 2006

Amend: Division II, Subsection 2.01 "Water Line Material and Size" **as follows:**

Delete: existing Item "E".
Add: new Item "E" **as follows:**

E. Service line to serve a residential house on one (1) residential lot shall be copper with a minimum diameter of three-quarter (¾) inch. Note the following exception.

Exception: In the City of Morrow, the service line shall be copper with a minimum diameter of one (1) inch.

Delete: existing Item "F".
Add: new Item "F" **as follows:**

F. Service line to serve two (2) separate residential houses on two (2) separate residential lots shall be copper with a minimum diameter of one (1) inch. The service line shall be fitted with a copper tee. The tee and service lines, coming from the tee, shall have a minimum diameter of three-quarter (¾) inch. Note the following exception.

Exception: In the City of Morrow, each residential house shall be served by a single service line. A single service line shall not be fitted with a tee to serve two (2) separate residential houses on two (2) separate residential lots.

Rename: existing Item "G" **to** Item "H" **as follows**:

H. Service line serving commercial/industrial buildings shall be copper with a minimum diameter of three-quarter (3/4) inch and a maximum diameter of three (3) inches or ductile iron sized as necessary for the demand.

Add: new Item "G" **as follows:**

G. Where three (3) or more fee simple town home units are attached to form a common structure, each single town home unit shall be provided a copper service line having a minimum diameter of one (1) inch.

AMENDMENT NO. 1 to the Above Referenced Specifications.

Amend: Division II, Subsection 2.09 "Water Meters and Backflow Prevention" **as follows:**

Delete: existing Item "C".
Add: new Item "C" **as follows:**

C. Meters shall be sized according to the anticipated demand and Division III, Section 7 of this document. Note the following exceptions.

Exceptions:

1. In the City of Morrow, a residential house shall be provided water through a meter having a minimum size of one (1) inch.

2. Where three (3) or more fee simple town home units are attached to form a common structure, each single town home unit shall be provided water through a meter having a minimum size of one (1) inch.

AMENDMENT NO. 2 to the Above Referenced Specifications.

Approval Date: 15 November 2006

Amend: Division III, Subsection 5.04 "Corporation Valve" **as follows:**

Delete: existing Acceptable Manufacturers.
Add: new Acceptable Manufacturers **as follows:**
Acceptable Manufacturers

1. Ford Meter Box Co.
2. Mueller Brass Co.
3. A.Y. McDonald Mfg.
4. Cambridge Brass.
5. Other Approved.

Amend: Division III, Subsection 5.05 "Curb Stop" **as follows:**

Delete: existing Acceptable Manufacturers.
Add: new Acceptable Manufacturers **as follows:**
Acceptable Manufacturers

1. Ford Meter Box Co. for ¾ inch and 1 inch sizes.
2. Mueller Brass Co.
3. A.Y. McDonald Mfg.
4. Cambridge Brass.
5. Other Approved.

AMENDMENT NO. 3 to the Above Referenced Specifications.

Approval Date: 12 December 2006

Amend: Division II "Design Requirements", Section 6 "Lift Stations", Subsection 6.04 "Telemetry" **as follows:**

Delete: existing Subsection 6.04 "Telemetry".
Add: new Subsection 6.04 "Telemetry" **as follows:**

6.04 Telemetry

A. A monitoring/dialer system shall interface the lift station alarms to a cellular phone network. Upon receipt of one or more alarm trips, the system shall automatically dial out to the phone network with preprogrammed messages.
   1. The system shall have the capability to monitor from 8 to 48 dry contacts or digital inputs, 8 to 48 analog inputs or energize from 4 to 24 relays in any combination.
      a) Each input shall monitor a set of dry contacts (normally-closed or normally-open).
      b) The dialer shall monitor the AC power and battery voltage continuously.
   2. Upon detecting an alarm on any of its inputs, a low battery condition or detecting loss of its AC power, the system shall begin dialing the first of up to 16 user programmed telephone numbers; each number shall be up to 50 digits.
   3. The system shall speak user-recorded messages to the called party describing its location and the alarm conditions that are present. The system shall verbally request that an acknowledgement be given. The system shall continue calling until the call is completed and acknowledged.
      The dialer shall provide acknowledgement of alarms from:
      a) The front panel.
      b) An input channel.
      c) A phone that is called with an alarm.
      d) A dial-in from a remote location with appropriate access codes.
   4. The dialer shall be situated in a NEMA 4X enclosure.

   <u>Acceptable Manufacturer – Product</u>
   1. Antx, Inc. - Antx DiaLog™ Elite dialer.
   2. Other Approved.

AMENDMENT NO. 3 to the Above Referenced Specifications.

B. A fixed cellular terminal shall transmit signals from the lift station to the cellular phone network.
   1. Air interface standard shall be as follows.
      a) GSM 900/1800 Phase 2+.
      b) GSM 850/1900 TIA/EIA J-STD-007.
   2. Transmit power as follows.
      a) GSM 850 and 900: 2 watts.
      b) GSM 1800 and 1900: 1 watt.
   3. Frequency ranges as follows.
      a) GSM 850: Transmit (824-849 MHz), Receive (869-894 MHz).
      b) GSM 900: Transmit (890-915 MHz), Receive (935-960 MHz).
      c) GSM 1800: Transmit (1710-1785 MHz), Receive (1805-1880 MHz).
      d) GSM 1900: Transmit (1850-1910 MHz), Receive (1930-1990 MHz).

   Acceptable Manufacturer – Product
   1. Telular Corporation - Phonecell® SX5e cellular terminal.
   2. Other Approved

C. Input/Output wiring shall use quick-disconnect pluggable connectors.

D. Electrical Protection shall be as follows.
   1. Transient voltage/surge protection shall be provided on power line, telephone and all input channels.
   2. Solid-state surge protection shall be provided on digital input, analog input, serial port, parallel port, telephone and AC power circuitry.
   3. All fuses shall be solid-state automatically resettable such that the user is not required to manually change a fuse.

AMENDMENT NO. 4 to the Above Referenced Specifications.

Approval Date: 16 April 2008

Amend: Division I "Policies and Procedures", Section 5 "Installation", Subsection 5.02 "Utility Contractor" **as follows:**

Delete: existing Subsection 5.02 "Utility Contractor".
Add: new Subsection 5.02 "Utility Contractor" **as follows:**

5.02 Utility Contractor

A. A licensed Utility Contractor, pre-approved by the CCWA, shall install water distribution systems and sanitary sewer systems.

B. Prior to commencing construction activities on a proposed water distribution system and/or sanitary sewer system, the CCWA Engineer shall receive the latest copy of the Utility Contractor's License.

AMENDMENT NO. 5 to the Above Referenced Specifications.

Approval Date: 04 September 2008
Effective Date: 01 February 2009

Amend: Division III "Material Requirements", Section 8 "Hydrants", Subsection 8.01 "Fire Hydrant" **as follows:**

Add: new Item "M" to Subsection 8.01 "Fire Hydrant" **as follows:**

M. Fire hydrants must conform to the specifications for National Standard fire hydrants for ordinary water works service of the American Water Works Association. Each fire hydrant installed after February 1, 2009 shall include a Davidson Anti Terrorism Valve (ATV) designed to protect against accidental backflow and intentional contamination of drinking water via the hydrant. The ATV shall be a stealth check valve located internal to the upper barrel of the hydrant and shall consist of four main parts.
   1. A sleeve-insert valve seat made of E coated or fusion bonded epoxy steel. The top of the valve seat shall have a machined slot to accommodate an EPDM quad ring which will provide an impenetrable seal between the seat and the valve.
   2. A valve made of brass with machined slots to accommodate an o-ring between the valve and the upper stem.
   3. A stainless steel machined upper stem will replace the original upper stem. The brass valve shall be attached to the upper stem in such a manner as to provide free vertical movement along the shaft.
   4. A stainless steel spring that shall fit around the upper stem and be of adequate compression strength and length that sufficient pressure is placed on the valve to provide an impenetrable seal when the hydrant is not in use and yet allow water to flow freely when the hydrant is flowed.

Amend: Division III "Material Requirements", Section 8 "Hydrants", Subsection 8.01 "Fire Hydrant", Acceptable Manufacturers - Product **as follows:**

Add: new Item "5" to Acceptable Manufacturers - Product **as follows:**

5. Davidson Hydrant Technologies, Inc. – Davidson Anti Terrorism Valve.

AMENDMENT NO. 5 to the Above Referenced Specifications.

Amend: Division IV "Construction Standards", Section 5 "Installation", Subsection 5.02 "Pipe, Fitting, Valve and Fire Hydrant Installation" **as follows:**

Add: new Item "N" to Subsection 5.02 "Pipe, Fitting, Valve and Fire Hydrant Installation" **as follows:**

N. Installation of the Davidson Anti Terrorism Valve shall be made a technician certified by the manufacturer.

STANDARD CONSTRUCTION SPECIFICATIONS

FOR

CARROLL COUNTY WATER AUTHORITY
CARROLL COUNTY, GEORGIA

WATER DISTRIBUTION SYSTEMS

October 2006

This sheet intentionally left blank.

WATER DISTRIBUTION SYSTEM SPECIFICATIONS
TABLE OF CONTENTS

DIVISION I POLICIES AND PROCEDURES

SECTION 1 SCOPE AND INTENT……..... 1-1
1.01 Purpose……..... 1-1
1.02 Delegation…… 1-1
1.03 Variance……1-1
1.04 Exclusion…….. 1-1
1.05 Severability……...1-1

SECTION 2 DEFINITIONS…….....2-1

SECTION 3 FEDERAL AND STATE REGULATIONS…….. 3-1

SECTION 4 INDUSTRY STANDARDS…… 4-1

SECTION 5 DESIGN APPROVAL…….....5-1
5.01 General……5-1
5.02 Technical Review……..... 5-1
5.03 Plan Processing…….. 5-2
5.04 Approval by Regulatory Agencies……..... 5-3
5.05 Period of Plan Approval…….....5-3

SECTION 6 EASEMENTS…….. 6-1
6.01 General……6-1
6.02 On-Site Easement…….....6-1
6.03 Off-Site Easement……...6-1
6.04 Size of Easement…… 6-2

SECTION 7 INSTALLATION…… 7-1
7.01 General……7-1
7.02 Utility Contractor……..... 7-1
7.03 Pre-construction Conference……... 7-3
7.04 Insurance Requirements……7-3
7.05 Inspection……7-3
7.06 Testing…….. 7-4

WATER DISTRIBUTION SYSTEM SPECIFICATIONS
TABLE OF CONTENTS

DIVISION I POLICIES AND PROCEDURES (Continued)

SECTION 8 CONNECTION TO CCWA SYSTEMS…… 8-1
8.01 General…… 8-1
8.02 Connection to System…… 8-1
8.03 Placing Water Systems in Service……8-2

SECTION 9 SYSTEM ACCEPTANCE…… 9-1
9.01 General…… 9-1
9.02 Final Inspection…… 9-1
9.03 Warranty…… 9-1
9.04 Maintenance Bond…… 9-1
9.05 Final Acceptance…… 9-2

WATER DISTRIBUTION SYSTEM SPECIFICATIONS
TABLE OF CONTENTS

DIVISION II DESIGN REQUIREMENTS

SECTION 1 DESIGN AND PLAN PREPARATION…… 1-1
1.01 General…… 1-1
1.02 Licensed Professionals…….. 1-1
1.03 Reference Documents and Standards…… 1-1
1.04 Plan Requirements…… 1-2
1.05 Modification of Plans……...1-2
1.06 As-Built Drawings…… 1-2

SECTION 2 WATER DISTRIBUTION…….. 2-1
2.01 General……... 2-1
2.02 Hydraulics…… 2-1
2.03 Water Line Material and Size…… 2-1
2.04 Water Line Location…… 2-2
2.05 Water Line Depth……..... 2-3
2.06 Fire Hydrant Location and Spacing……..... 2-4
2.07 Valve Size and Location…… 2-4
2.08 Thrust Restraint…….. 2-5
2.09 Water Meters and Backflow Prevention…….. 2-6

SECTION 3 MISCELLANOUS……... 3-1
3.01 General…… 3-1
3.02 Fire Protection Systems…… 3-1

This sheet intentionally left blank.

WATER DISTRIBUTION SYSTEM SPECIFICATIONS

TABLE OF CONTENTS

DIVISION III MATERIAL REQUIREMENTS

SECTION 1 MATERIALS…… 1-1
1.01 Applicable Standards…… 1-1
1.02 Quality Assurance……...1-1
1.03 Substitutions……1-1
1.04 Acceptance……...1-1

SECTION 2 POTABLE WATER PIPE AND FITTINGS…….....2-1
2.01 Ductile Iron Pipe Classification..……..... 2-1
2.02 PVC Pipe Classification..…….. 2-1
2.03 Fitting Classification……..... 2-1
2.04 Gaskets and Bolted Connections…… 2-2
2.05 Coatings and Linings.....…….....2-3
2.06 Pipe Marking…… 2-3
2.07 Acceptable Manufacturers……2-4

SECTION 3 COPPER PIPE AND FITTINGS……...3-1
3.01 Pipe Classification……...3-1
3.02 Fittings…….. 3-1
3.03 Water Service Monuments…… 3-1

SECTION 4 VALVES AND ACCESSORIES……... 4-1
4.01 Gate Valve……4-1
4.02 Butterfly Valve…… 4-2
4.03 Cross-Connection Control Devices……4-4
4.04 Pressure Reducing Valve……4-4
4.05 Corporation Valve……..... 4-4
4.06 Curb Stop……..... 4-5
4.07 Valve Box…… 4-5
4.08 Valve Monuments……4-6

SECTION 5 TAPPING SLEEVES…… 5-1
5.01 Tapping Sleeve……... 5-1
5.02 Tapping Saddle……... 5-1

SECTION 6 WATER METERS…….. 6-1
6.01 Water Meters…….. 6-1
6.02 Water Meter Boxes (Residential)…… 6-1
6.03 Water Meter Vaults…… 6-1
6.04 Vault Access Hatches…… 6-2

SECTION 7 HYDRANTS……7-1
7.01 Fire Hydrants……7-1

WATER DISTRIBUTION SYSTEM SPECIFICATIONS
TABLE OF CONTENTS

DIVISION III MATERIAL REQUIREMENTS (Continued)

SECTION 8 CASING AND TUNNEL LINER……8-1
8.01 Casing…….. 8-1

SECTION 9 ENVIRONMENTAL COATINGS……..9-1
9.01 Materials Requiring Coatings…….. 9-1

SECTION 10 PAVEMENT……...10-1
10.01 General……...10-1

SECTION 11 MISCELLANEOUS MATERIALS……11-1

WATER DISTRIBUTION SYSTEM SPECIFICATIONS
TABLE OF CONTENTS

DIVISION IV CONSTRUCTION STANDARDS

SECTION 1 GENERAL……1-1
1.01 Contractor License…… 1-1
1.02 Utility Notification…… 1-1
1.03 Work Commencement…….. 1-1
1.04 Traffic Control…… 1-2
1.05 Protection of Persons and Property……1-2
1.06 Protection of Existing Trees and Vegetation…….. 1-3
1.07 Use of Explosives……1-3
1.08 Miscellaneous Standards…… 1-4

SECTION 2 MATERIAL DISTRIBUTION……2-1
2.01 General……2-1
2.02 Delivery…… 2-1
2.03 Handling…….. 2-1
2.04 Distribution…….. 2-1
2.05 Storage…….. 2-2
2.06 Maintenance and Protection…… 2-2

SECTION 3 EROSION AND SEDIMENT CONTROL…… 3-1
3.01 General……3-1
3.02 Stream and Ditch Crossings…… 3-2

SECTION 4 SITE PREPARATION…… 4-1
4.01 Clearing and Grubbing…….. 4-1
4.02 Topsoil Stockpiling…… 4-1
4.03 Removing Pavement…… 4-2

SECTION 5 EXCAVATION……5-1
5.01 General……5-1
5.02 Soil Excavation……5-1
5.03 Rock Excavation…… 5-1
5.04 Pipe Trench Excavation……5-2

SECTION 6 INSTALLATION……6-1
6.01 Pipe Bedding…….. 6-1
6.02 Pipe, Fitting, Valve and Fire Hydrant Installation…… 6-1
6.03 Thrust Blocking……6-2
6.04 Meter Box and Vault Installation…….. 6-3
6.05 Borings and Casings…… 6-4
6.06 Pipe and Valve Identification…… 6-6

WATER DISTRIBUTION SYSTEM SPECIFICATIONS
TABLE OF CONTENTS

DIVISION IV CONSTRUCTION STANDARDS (Continued)

SECTION 7 BACKFILL AND COMPACTION…… 7-1
7.01 Backfill…….. 7-1
7.02 Compaction……..7-1

SECTION 8 SITE COMPLETION…….. 8-1
8.01 Grading……8-1
8.02 Replacing Pavement…….. 8-1
8.03 Grassing……8-2

SECTION 9 TESTING…… 9-1
9.01 General……9-1
9.02 Hydrostatic……9-1

SECTION 10 DISINFECTION……10-1
10.01 General…… 10-1
10.02 Initial Flushing……10-1
10.03 Chlorination……10-2
10.04 Final Flushing…… 10-2
10.05 Bacteria Testing…… 10-3

WATER DISTRIBUTION SYSTEM SPECIFICATIONS
TABLE OF CONTENTS

APPENDICES

Appendix A **Water Distribution Addition Submittal Form**

Appendix B **Maintenance Bond Form**

Appendix C **Waiver of Liens Form**

Appendix D **Water Distribution Plan Requirements**

This sheet intentionally left blank.

WATER DISTRIBUTION SYSTEM SPECIFICATIONS
TABLE OF CONTENTS

CONSTRUCTION DETAILS

W-1 Water Main Location (Roadways With Curb and Gutter)

W-2 Water Main Location (Roadways Without Curb and Gutter)

W-3 Typical Gate Valve Installation

W-4 Fire Hydrant Installation

W-5 Flush Valve Assembly

W-6 Typical Pipe Bedding

W-7 Typical Pavement Patch

W-8 Concrete Thrust Restraint – 1

W-9 Concrete Thrust Restraint – 2

W-10 Concrete Thrust Restraint – 3

W-11 Concrete Thrust Restraint – 4

W-12 Vertical Blocking

W-13 Typical Creek Crossing

W-14 Service Connection

W-15 Service Box Location with Underground Power

W-16 Service Box Location with Overhead Power

W-17 Typical Water Main Crossing Paved Streets

W-18 Silt Fence

W-19 Rock Dam

W-20 Cul-de-sac Detail

W-21 Residential Meter Installation

This sheet intentionally left blank.

DIVISION I POLICIES AND PROCEDURES

SECTION 1: SCOPE AND INTENT

1.01 Purpose

The purpose of this document is to set forth the uniform policies, regulations and procedures governing the design, construction, use and operation of the water systems under the jurisdiction and control of the Carroll County Water Authority.

1.02 Delegation

The Carroll County Water Authority shall review and approve the design and inspect the installation of water distribution systems that will be owned and maintained by the Carroll County Water Authority to ensure compliance with the specifications.

1.03 Variance

Under special conditions, the Carroll County Water Authority may modify the specifications herein. The Executive Director of the Carroll County Water Authority shall authorize any variance in writing.

1.04 Exclusion

In the event, design, material or construction requirements necessary for the construction of a project or portion of a project are excluded from these specifications, the Carroll County Water Authority shall determine the applicable requirements, standards and specifications to complete the work.

1.05 Severability

In the event any article, section, subsection, sentence, clause or phrase of this document shall be declared or adjudged invalid or unconstitutional, such adjudication shall in no manner affect the other articles, sections, subsections, sentences, clauses or phrases of this document, which shall remain in full force

and effect, as if the article, section, subsection, sentence, clause, or phrase so declared or adjudged invalid or unconstitutional were not originally a part thereof. The governing authority hereby declares that it would have adopted the remaining parts of this document if it had known that such part or parts hereof would be declared or adjudged invalid or unconstitutional.

SECTION 2: DEFINITIONS

The listed works, phrases or acronyms are defined as follows:

ACI: American Concrete Institute.

ANSI: American National Standards Institute.

ASTM: American Society for Testing and Materials.

Authority: Carroll County Water Authority, its representatives and agents.

AWWA: American Water Works Association.

CCWA: Carroll County Water Authority.

CCWA Engineer: Carroll County Water Authority, Department Manager of Engineering or authorized representative (i.e. CCWA Project Inspector).

County: Carroll County.

Design Engineer: The engineer or surveyor under whose direction the development plans submitted for review were prepared. Design Engineer shall be a Georgia Licensed Professional Engineer or Georgia Licensed Registered Land Surveyor having knowledge and experience of water distribution system design.

Developer: Any person, individual, firm, partnership, association, corporation, estate, trust, or any other group or combination who undertakes or proposes to undertake the development of land or directs the development activities defined herein.

Diameter: Nominal inside diameter of pipe.

DIP: Ductile iron pipe.

Easement: Interest in land owned by another that entitles its holder to a specific limited use.

Executive Director: Chief executive officer of the Carroll County Water Authority.

Georgia EPD: State of Georgia, Department of Natural Resources, Environmental Protection Division.

GPM (gpm): Gallons per minute.

Land Disturbance Permit: An official authorization issued by Carroll County Community Development permitting clearing and/or grading of a site.

Mean Sea Level: The average height of the sea for all stages of the tide. It is used as a reference to establish elevations.

Pavement: Any asphalt, concrete, gravel or dirt surface including curbs and sidewalks used by vehicles and/or pedestrians.

Person: An individual, firm, partnership, corporation, joint venture, association, social club, fraternal organization, estate, trust, business trust, receiver, syndicate, or other group or combination acting singly or collectively for a common purpose, and the duly authorized agents thereof.

Preliminary Plat: A drawing showing proposed improvements on a parcel of land as outlined in Carroll County's Subdivision and Development Regulations.

PSF (psf): Pounds per square foot.

PSI (psi): Pounds per square inch.

PVC: Polyvinyl Chloride.

Rock: Any solid material being resistant to excavation as determined in the field by the CCWA Engineer.

Service Connection: Fitting(s) connecting a service line from a property (lot) to a water main.

Suitable Soil: Soil that is free of organic and/or deleterious material, expansive clay and rock fragments larger than one and a half (1.5) inches.

Utility Contractor: Georgia Licensed Utility Contractor in accordance with the Official Code of Georgia.

Water Distribution System: Pressurized pipes, valves and other components that convey potable water.

Water Main: Pressurized pipe used to convey potable water to a service line.

WTP: Water Treatment Plant.

SECTION 3: FEDERAL AND STATE REGULATIONS

The standards, regulations and requirements established by the Authority are not intended to supersede any Federal or State law regulating water, water supply or water treatment. All persons subject to the standards, regulations and requirements established herein are also subject to all federal and state laws and regulations governing such matters. In the event of a conflict between federal, state and local laws and regulations, the more stringent law and regulation shall apply.

This sheet intentionally left blank.

SECTION 4: INDUSTRY STANDARDS

Applicable construction industry standards are made a part of this document by reference. Where the date of issue of a referenced standard is not specified, comply with the standard in effect at the time of project commencement.

Installation guides provided by material suppliers are incorporated into these specifications by reference and they have the same force and effect as if bound or copied directly into this document.

Where compliance with two or more standards is specified, and they establish different or conflicting requirements, the CCWA Engineer will determine the applicable standard.

This sheet intentionally left blank.

SECTION 5: DESIGN APPROVAL

5.01 General

A. The design of water distribution systems shall conform to the specifications herein.

B. Concurrent with plan submittal, the Design Engineer shall provide a completed Water Distribution Addition Submittal Form. The Water Distribution Addition Submittal Form is included in Appendix A**.**

C. Plan approval does not reserve water capacity for the proposed development.

5.02 Technical Review

A. Proposed water distribution system plans shall be reviewed by the CCWA Engineer under the supervision of a Georgia Licensed Professional Engineer for technical adequacy and conformance to applicable requirements to determine that the system is suitable for construction.

B. The CCWA shall perform a feasibility study to determine whether the existing CCWA water distribution system has sufficient capacity. The following review shall be completed.

1. The latest 12 months of reported production from the supplying WTP shall be examined to determine an average monthly production rate. A proposed development, whose supply requirement would cause the WTP to exceed the Georgia EPD permitted production rate, shall not be connected to the CCWA system.

2. Pressure and flow from the contributing water distribution system shall be examined to determine whether the additional supply requirement will adversely affect the surrounding system. A proposed development, whose supply requirement would adversely affect the surrounding system, shall not be connected to the CCWA system.

C. CCWA review comments shall be marked and noted on development plans in the color red (Red Line Comments).

5.03 Plan Processing

A. Upon submittal of a preliminary plan to local governing agencies for preliminary approval, submit two (2) copies of the preliminary plat to the CCWA for review. Include all current and future phases of the development and other information as requested by the CCWA Engineer.

B. Upon completion of water distribution system construction plans submit two (2) sets of construction plans to the CCWA to start the CCWA review process. The construction plans shall including lot layout, grading plans, road plans, soils information, sewer plans, erosion control plans, etc.

C. Upon completion of the review by the CCWA Engineer, one (1) set of redlined construction plans will be returned to the Design Engineer. All CCWA review comments should be addressed and corrected.

.

D. When all redline comments have been appropriately addressed, the Design Engineer shall submit four (4) sets of construction plans to the CCWA for review.

E. When the CCWA is in receipt of four (4) sets of construction plans meeting CCWA approval, the CCWA shall stamp the water distribution system construction plans **"*CCWA APPROVED".***

F. Conditional plan approval may be granted, with approval of the water distribution system being contingent upon conditions being met as noted by the CCWA Engineer. These plans will be marked ***"CCWA APPROVED With The Following Conditions:".*** The conditions of approval will be listed and are considered an integral part of the construction plans. The conditions of approval listed are required to be fulfilled for the CCWA to accept the water distribution system after construction.

G. Soil Erosion and Sedimentation Control Plans pertaining to the overall development shall be reviewed and approved by Carroll County Community Development. Construction of any kind shall not begin on a project prior to the issuance of a Land Disturbance Activity permit by Carroll County Community Development.

5.04 Approval by Regulatory Agencies

A. The Design Engineer shall address all deficiencies and resubmit plans as directed in Section 5.03. Plans shall not be approved until all deficiencies have been addressed to the satisfaction of the CCWA Engineer.

B. Note that plan approval by the CCWA Engineer shall not be construed, in any manner, to relieve the Developer or Utility Contractor of his responsibility for strict compliance with the specifications herein and any applicable laws and regulations.

C. One (1) copy of approved construction plans shall be kept in the CCWA's office has a record copy. Any discrepancies found on sets of approved construction plans shall be compared to the record copy for clarification by the CCWA Engineer.

D. Installation of water distribution systems shall not commence on any development falling under the CCWA's authority until the CCWA has granted final approval of water distribution system plans and Carroll County Community Development has issued a Land Disturbance Activity permit.

E. Note that other agencies may have regulatory authority and the Developer and/or Utility Contractor is responsible for obtaining other agency approval.

5.05 Period of Plan Approval

The approval period of water distribution system plans shall be for twelve (12) months. Approved plans or projects that are not initiated or are inactive for a twelve (12) month period shall become invalid. Should an approved plan or project become invalidated, the CCWA Engineer shall determine the validity of the plan or whether a new system design or submittals are required.

This sheet intentionally left blank.

SECTION 6: EASEMENTS

6.01 General

A. Components of water distribution systems, to be owned by the CCWA, should be situated within road right-of-way or utility easement.

B. The following water distribution system components, to be owned by the CCWA, shall be situated within an easement that is granted to the CCWA, when a street right-of-way is not available.

1. Water main.
2. Water meter/check valve assembly.
3. Fire hydrant/flush assembly.
4. Access road.
5. Other components required by the CCWA.

C. An easement shall not encroach into a structure's foundation.

D. All easement documents must be received by the CCWA prior to Final Acceptance.

6.02 On-Site Easement

A. "On-site" easements are those easements falling within the boundaries of the current phase of the development that are shown on the plan and are recorded through the process of recording the final plat.

B. Developer shall grant to the CCWA, the exclusive right to construct, reconstruct, operate, maintain, repair, replace, improve, alter, remove, relocate and inspect water distribution systems that are situated over, across and under the land wherein the water distribution systems lie on the Developer's property.

6.03 Off-Site Easement

A. "Off-site" easements are those easements falling outside the boundaries of the current phase of the development and must be provided and recorded by the Developer granting CCWA, the exclusive right to construct,

reconstruct, operate, maintain, repair, replace, improve, alter, remove, relocate and inspect water distribution systems that are situated over, across and under the land of each property owner. Easements through property owned by the developer, including water lines that will be included in later phases of the same project, must be treated as routine off-site easements.

B. Off-site easements shall be negotiated and acquired by the Developer with the property owner.

C. Construction of the off-site water distribution systems shall not begin until all off-site easements for system completion are acquired, recorded and received by the CCWA Engineer.

6.04 Size of Easement

A. The minimum width of a permanent on-site/off-site easement associated with water distribution system components shall be 20 feet.

B. The minimum size of an easement associated with a water meter/check valve assembly shall be 20 feet by 30 feet.

C. Easement width or size may be increased at the discretion of the CCWA Engineer.

SECTION 7: INSTALLATION

7.01 General

A. The installation of water distribution systems shall be in accordance with the approved plans, specifications and applicable AWWA standards.

B. A set of plans stamped approved by the CCWA shall be present on the job site whenever work is being performed on the water distribution system.

C. Approved plans or projects that are not initiated or are inactive for a twelve (12) month period shall become invalid. Should an approved plan or project become invalidated, the CCWA Engineer shall determine the validity of the plan or whether a new system design or submittals are required.

7.02 Utility Contractor

A. Only Utility Contractors meeting requirements established by the CCWA will be allowed to install systems that are designated to be maintained by the CCWA or connect to any part of the existing CCWA's water system.

B. A performance bond may be required from the Utility Contractor to ensure the project is completed in accordance with CCWA specifications and requirements.

C. Utility Contractor Minimum Qualification Requirements:

1. The firm must have a current and active Utility Contractor's License issued by the State of Georgia to accomplish public water and waste water projects.

2. The firm must meet all requirements as required by the State of Georgia to perform public utility projects.

3. The firm shall show sufficient experience to perform the required work.

4. Qualifications submitted will be restricted to the firm submitting the application. References related to the performance of individuals

when working for other firms will not be considered sufficient for qualification of an applicant's firm.

5. Three letters of reference are required showing the ability of the applicant to complete similar jobs in scope and size.

6. The applicant firm must show proof of insurance coverage that meets or exceeds the current CCWA's requirements.

D. Subcontractor work on CCWA projects must not exceed 49% of the work completed on an individual project. Percentage of work will be determined by the linear footage of water main installed on the project.

E. Utility Contractors must maintain insurance coverage that meets or exceeds the current amounts as required by the CCWA. Current minimum insurance requirements are as follows:

1. General Liability $1,000,000
Combined single limit per occurrence bodily injury, personal injury, and property.

2. Automobile Liability $1,000,000
Combined single limit per accident, for bodily injury, and property damage.

3. Workers Compensation and Employers' Liability $1,000,000
Limit per accident and worker's compensation as required by the Labor Code of the State of Georgia.

F. A Utility Contractor may be prevented from installing systems that are designated to be maintained by the CCWA or connect to any part of the existing CCWA's water system based on failure to perform satisfactory work, discovery of misrepresentation of contractor requirements, inability to meet requirements, poor workmanship, falsification of documents, failing to show interest in utility work, financial instability, non-compliance with specifications or for other reasons deemed to be sufficient and in the best interest of the CCWA.

G. Qualified Utility Contractors shall be placed on a probationary period for a duration of two (2) years and until the satisfactory completion and acceptance of four (4) projects inspected by the CCWA Engineer. While on the

probationary period the Utility Contractor may be removed for the Qualified Contractors List for reasons deemed sufficient by the CCWA Engineer.

H. At no time will a Utility Contractor or any other individual operate valves or hydrants within the CCWA water distribution system without specific authorization from CCWA or under the direct supervision of CCWA.

7.03 Pre-construction Conference

A. Prior to the commencement of work on the project, a pre-construction conference will be held at a mutually agreed upon time and place. The conference shall be attended by the CCWA Engineer, the Utility Contractor and the project superintendent; and may be attended by appropriate State Officials; and others as requested by the Utility Contractor, Developer or CCWA.

B. The purpose of the conference is to designate responsible personnel and establish a working relationship. Matters requiring coordination will be discussed and procedures for handling such matters established.

C. The CCWA Engineer will preside at the pre-construction conference, and the meeting may be taped and/or video-taped.

7.04 Insurance Requirements

A. Utility Contractors performing work on CCWA projects shall comply with current CCWA insurance and bonding requirements.

B. Companies such as railroads, electric power suppliers, natural gas suppliers, etc. may require Utility Contractors to furnish insurance, in addition to CCWA requirements when crossing their respective easements. The Utility Contractor shall provide such insurance as required.

7.05 Inspection

A. The CCWA shall inspect water distribution systems during all phases of construction to ensure the systems are being constructed in accordance with the plans approved by the CCWA and specifications herein.

B. The Developer/Utility Contractor shall provide the CCWA Engineer with a minimum 48-hour notice prior to commencing construction on a water distribution system.

C. At no time shall a Utility Contractor or any other individual operate, manipulate or alter valves, fire hydrants or other appurtenances of the CCWA water system with out direct authorization from the CCWA or supervision by the CCWA.

D. The Developer/Utility Contractor shall, at all times, permit and facilitate inspection of work by the CCWA. The presence of the CCWA Engineer on the site of work shall not be construed to, in any manner, relieve the Developer/Utility Contractor of their responsibility for strict compliance with the approved plans and specifications herein.

E. The CCWA Engineer shall inform the Utility Contractor when construction is deficient from the approved plans and specifications herein. Deficiencies shall be addressed in a timely manner as determined by the CCWA Engineer

F. Deficiencies not addressed in a timely manner shall be justification for the CCWA to stop work on a project. The CCWA Engineer shall issue a Stop Work Order to the Utility Contractor in writing. Any work performed after the issuance of a Stop Work Order shall not be accepted by the CCWA. Continued work on a project after being issued a Stop Work Order shall be justification to inform the appropriate legal counsel or Carroll County government agency for necessary enforcement actions.

7.06 Testing

A. Water distribution systems shall be subjected to all testing as outlined in the specifications. Testing shall be performed at the expense of the Utility Contractor.

B. The CCWA Engineer shall be given a minimum 48-hour notice prior to any pressure testing, disinfection or bacteria testing of the water distribution system, so that the CCWA Engineer may witness testing, disinfection and sampling procedures.

C. Testing the density of compacted soil may be required by the CCWA. If required, the testing shall be performed at the expense of the Utility Contractor by an approved geotechnical and material testing company. Materials not meeting required specification shall be removed, replaced and retested for compliance at the expense of the Utility Contractor.

D. Bacteria testing of the water distribution system shall be performed at the expense of the Utility Contractor by a certified laboratory. The certified laboratory must be listed on the Georgia Environmental Protection Division List of Certified Microbiological and Chemical Drinking Water Analysis Laboratories.

E. Results of tests performed by testing companies shall be provided to the CCWA Engineer in writing.

F. The Utility Contractor shall be responsible for the cost of water to fill, purge and test all water lines and appurtenances. The volume of water used will be determined by the CCWA Engineer based on the number of times the water system had to be filled and flushed.

This sheet intentionally left blank.

SECTION 8: CONNNECTION TO CCWA SYSTEMS

8.01 General

The Developer/Utility Contractor shall be allowed to connect a new system into the CCWA system provided the applicable fees and charges are paid, water capacity is available, CCWA's policies and procedures are met, and the installed water distribution system is in accordance with approved plans and specifications.

8.02 Connection to System

A. The CCWA Engineer shall be notified at least 48-hours in advance of connecting to the CCWA system. A minimum of 24-hours notification shall be given to the affected public prior to any disruption in water service.

B. Connections to CCWA water system shall not be made on Fridays, weekends or after 2 p.m., unless otherwise directed by the CCWA Engineer.

C. The CCWA Engineer shall be present during connection of the new water distribution system to the CCWA water system. Prior to installation, the CCWA shall approve all materials supplied by the Utility Contractor to be used in making the connection.

D. Upon completing a water distribution system connection, the Developer's water system shall be valved-off from the remainder of the CCWA water distribution system until satisfactory disinfection of the Developer's water system is achieved.

E. Should an unauthorized connection or connection without the presence of the CCWA Engineer be made to the CCWA systems, the Developer/Utility Contractor shall be subject to a fine and/or refusal of service. Under any circumstance, the Developer/Utility Contractor shall expose and thoroughly clean all piping and components of the connection for inspection by the CCWA Engineer. Noncompliant connections and/or damage to the CCWA system shall be repaired/replaced in conformance with the approved plans and specifications herein at the expense of the Developer/Utility Contractor.

8.03 Placing Water Systems in Service

A. Prior to placing a water distribution system in service, the CCWA must approve of all construction and testing of the system.

B. No water distribution system shall be placed in service until the CCWA is in receipt of satisfactory disinfection and bacteria test results from a certified laboratory meeting the requirements set in Division I, Section 7.06 and Division IV, Section 10.

C. Placement of a water distribution system into service shall not be made until directly authorized by the CCWA Engineer.

SECTION 9: SYSTEM ACCEPTANCE

9.01 General

Acceptance of the Developer's water distribution system shall be considered by the CCWA at such time as the Developer has met all terms and conditions of the specifications herein. CCWA is not responsible for water distribution systems which cannot be accepted by CCWA due to noncompliance with these specifications. All contractors and developers should be familiar with the current edition of CCWA Specifications prior to design and construction.

9.02 Final Inspection

Prior to Final Acceptance, the CCWA shall perform a final inspection of the water distribution system. Any deficiencies encountered shall be immediately addressed by the Developer/Utility Contractor and an additional inspection shall be required after correcting deficiencies.

9.03 Warranty

Water distribution systems installed by Developers\Utility Contractors which are accepted by the CCWA for ownership, operation and maintenance shall be warranted and guaranteed by the Developer for a period of one (1) year from the date of Acceptance. The completed system shall be free of all defects due to faulty products or workmanship, and the Developer shall be responsible for all corrections and repairs to the water system as required due to failure of the system or noncompliance with the specifications upon notice by the CCWA. During this period, the Developer shall be responsible for repairing the system, correction of noncompliance issues and for the payment of water lost due to failure of the system, as determined by the CCWA Engineer.

9.04 Maintenance Bond

A. Before Final Acceptance is granted, the Developer must submit a Maintenance Bond or Letter of Credit to the CCWA in accordance with these specifications. The standard Maintenance Bond Form is included in Appendix B. The Maintenance Bond shall have a life of one (1) year from the date of Final Acceptance as determined by the CCWA Engineer.

B. The bond shall be twenty (20) percent of the cost of labor and materials to accomplish the subject project. The CCWA may require the Developer and/or Utility Contractor to submit contract information, bill of sales, invoices or other information to verify bond amount submitted to the CCWA is correct.

C. Nine months after Final Acceptance, the project will be re-inspected to insure system compliance and acceptability. If any corrective measures are necessary, a letter stating the items to be corrected will be sent to the Developer. The Developer must correct all deficiencies found.

D. Failure to correct any deficiencies in the system in a timely manner as determined by the CCWA may result in the execution of the Maintenance Bond or Letter of Credit to recover cost associated with the CCWA correcting deficiencies found in workmanship and/or materials.

9.05 Final Acceptance

A. Final acceptance of the Developer's water distribution system by the CCWA shall be when written, signed and dated by the CCWA Engineer. The following requirements must be met before Final Acceptance can occur:

1. All water mains and appurtenances to be owned and operated by CCWA are completed for the development and conform to CCWA specifications.

2. As-built drawings are received and approved.

3. Twenty (20) percent maintenance bond or letter of credit with a life of one (1) year from the date of Final Acceptance, as notified by CCWA in writing, is received.

4. The CCWA has received an executed copy of the Waiver of Liens Form by the Developer. The standard Waiver of Liens Form is included in Appendix C.

5. A copy of the recorded easements, where applicable, having CCWA as the grantee describing all related bearings, distances, and accompanied by an easement plat shall be on file at CCWA office.

B. Meters can be issued only after Final Acceptance of the project by CCWA.

This sheet intentionally left blank.

DIVISION II DESIGN REQUIREMENTS

SECTION 1: DESIGN AND PLAN PREPARATION

1.01 General

The design and plan preparation of water distribution systems shall conform to the specifications herein.

1.02 Licensed Professionals

A. Water distribution system design and plan preparation shall be performed by a Georgia Licensed Professional Engineer or Georgia Licensed Land Surveyor who has sufficient knowledge and experience to properly perform the design.

B. The professional performing the design and preparing the plans shall seal each plan sheet with their stamp and sign their name across the stamp.

1.03 Reference Documents and Standards

General methods of design and construction shall conform to the specifications herein and the following. When standards conflict with one another, the CCWA Engineer shall determine the applicable standard.

A. Georgia EPD, Minimum Standards for Public Water Systems, May 2000.

B. Georgia EPD, Rules and Regulations for Water Quality Control, Chapter 391-3-6, latest effective date.

C. Utility Accommodations Policy and Standards, Georgia Department of Transportation, Office of Utilities, latest edition.

D. American Water Works Association Standards, latest editions.

E. American Society for Testing and Materials Standards, latest editions.

F. Occupational Safety and Health Administration regulations, latest editions.

G. Georgia Department of Transportation specifications and regulations, latest editions.

1.04 Plan Requirements

A. Water distribution system plans shall be prepared in accordance with and include as a minimum the information detailed in Appendix D.

B. Concurrent with the initial submittal of water distribution system plans to the CCWA, a completed Water Distribution Addition Submittal form shall be submitted. The CCWA plan review process shall not commence until the Water Distribution Addition Submittal form is received. The Water Distribution Addition Submittal Form is included in Appendix A.

1.05 Modification of Plans

Water distribution system plans approved by the CCWA shall not be modified or deviated from during construction unless the CCWA Engineer approves modifications.

1.06 As-Built Drawings

A. As-Built Drawings of the installed water distribution system shall be prepared and sealed in accordance with requirements set forth herein.

B. As-Built Drawings shall be completed upon completion of the water distribution system.

C. As-Built Drawings shall show all street names, right-of-way widths, edge of pavement, related easements, lot numbers and addresses, locations, sizes and materials of all water distribution system components.

D. Detailed drawings of valve locations showing valve locations dimensioned to local monuments shall be included on As-Built drawings.

E. As-Built Drawings shall be prepared using a survey that ties the development's water distribution system horizontally and vertically to the following state plane coordinate system or as amended by the CCWA.

Horizontal Control: NAD 83/94.
Vertical Control: NAVD 88.
Grid Zone: Georgia West 1002.

F. As-Built Drawings shall include the Northing and Easting coordinates for all fire hydrants (operating nut), valves and other water system components in the development as directed by the CCWA Engineer.

G. As-Built Drawings shall include meter sizes for each residential lot and show meter box locations. The drawings should also identify lots that require Residential Fire Sprinkler Systems.

G. The following certification shall be included on the As-Built Drawings and signed by the Design Engineer:

"I certify that the water distribution system depicted by this As-Built Drawing was constructed in accordance with the plans approved by the CCWA. The information submitted on this As-Built Drawing is to the best of my knowledge and belief, true, accurate and complete."

H. The Developer's water distribution system shall not be considered complete until the As-Built Drawings have been reviewed and approved by the CCWA Engineer. Note that three (3) sets of the approved As-Built Drawings shall be submitted to the CCWA Engineer. The approved As-Built Drawings shall also be submitted to the CCWA Engineer in digital format (AUTOCAD format).

This sheet intentionally left blank.

SECTION 2: WATER DISTRIBUTION

2.01 General

A. The following section shall be used as a guideline for the design of water mains and service lines that will supply residential, commercial and industrial complexes.

B. The CCWA may require projects to have multiple connection points to existing water mains.

C. A minimum twelve (12) foot shoulder shall be provided on new streets as measured from the back of curb or edge of pavement for the installation of underground utilities.

2.02 Hydraulics

A. Design flow shall be based on the following fire flow demands.

1. Residential Area: As required by local ordinances and/or authorities.

2. Commercial/Industrial Area: As required by local ordinances and/or authorities.

B. The following range of supply pressures shall be assumed when sizing system components.

Pressure (min.): 20 psi residual pressure at full range of operational conditions.

C. Minimum flow per residential service: 2 gpm.

2.03 Water Line Material and Size

A. Water mains and associated fittings shall be ductile iron with a minimum diameter of six (6) inches, unless otherwise directed by CCWA.

B. Water main pipe assembly shall be push-on joint unless indicated otherwise.

C. Water main pipe assembly in a bore casing shall use restrained joint (locking gaskets) or prefabricated spacers. The CCWA at it own discretion by require both restrained joint and prefabricated spacers to be used.

D. Service line supplying a single fire hydrant within the right-of way shall be a minimum diameter of six (6) inches.

E. Service line serving one (1) residential lot shall be copper with a minimum diameter of three-quarter (¾) inch.

F. Service line serving two (2) residential lots shall be copper with a minimum diameter of one (1) inch. The service line shall be fitted with a copper wye. The wye and service lines, coming from the wye, shall have a minimum diameter of three-quarter (¾) inch.

G. Service line serving commercial/industrial buildings shall be sized as necessary for the demand. Service line material will be determined by the CCWA Engineer.

2.04 Water Line Location

A. Situate water mains outside of pavement, within street right-of-way when possible, at five (5) feet beyond the back of curb or edge of pavement or at location approved by the CCWA Engineer.

B. Situate water mains on the south and west sides of streets when possible.

C. A service line supplying a single lot shall be located in-line with the lot's property boundary line or as directed by the CCWA Engineer.

D. A service line serving two (2) lots, from the water main to the meter, shall be located in-line with the lots' common property boundary.

E. No water main or service line shall be constructed on solid waste landfills.

F. No water main or service line shall be constructed to serve a structure that is constructed on or to be constructed on a solid waste landfill.

G. Each water main and service line shall be locatable.

H. Water mains shall have a minimum of ten (10) feet horizontal separation from any sewer. In the event where the required separation can not be achieved, the water main must be laid in a separate trench from the sewer or laid in the same trench with the water main located at one side of the trench on a bench of undisturbed earth above the sewer. Maintain a vertical separation of at least eighteen (18) inches between the crown of sanitary sewers and the invert of existing or proposed water mains with the sewer located below the water main. If unable to achieve the separation, then the water and sewer mains shall be constructed of ductile iron pipe with mechanical joints meeting water main standards for a distance of ten (10) feet on each side of the crossing point. A section of water main pipe shall be centered at the point of all sewer crossings.

I. Maximum of one (1) water main per each case bore without written approval by CCWA.

J. Every effort will be made to avoid “dead end” water main configurations. If a proposed development abuts existing infrastructure, where an interconnection of water mains is possible, then the developer will be required to interconnect the existing water mains with the new water mains.

2.05 Water Line Depth

A. Water mains and service lines to fire hydrants shall have a minimum suitable soil cover of four (4) feet. The depth of four (4) feet from finish grade to top of pipe shall be determined as follows.

1. As measured from edge of pavement (top back-of-curb) when the finish grade elevation of the pipe route is equal to or greater than adjacent pavement elevation.

2. As measured from finish grade elevation of the pipe route when the pipe route elevation is less than the adjacent pavement elevation.

B. Water mains shall have a minimum eighteen (18) inch vertical separation from any sewer.

C. Service lines shall have suitable soil cover as shown in the construction detail or as directed by the CCWA Engineer.

D. Water mains eighteen (18) inches in diameter and larger shall be checked for buoyancy when submerged in groundwater or situated within the 100-year flood zone.

E. Other depth as approved by the CCWA Engineer.

2.06 Fire Hydrant Location and Spacing

A. Hydrants shall be situated within the street's right-of-way.

B. Fire hydrants servicing residential areas shall be spaced a maximum of 1,000 feet as measured along the edge of pavement. No lot shall be greater than 500 feet from a fire hydrant. If local ordinances or authorities require more stringent spacing then they shall be enforced.

C. Fire hydrants servicing commercial and industrial areas shall be spaced a maximum of 500 feet as measured along the edge of pavement. If local ordinances or authorities require more stringent spacing then they shall be enforced.

D. Fire hydrants shall be situated in-line with property boundary lines, where practical.

E. Fire hydrants may be required in other locations if deemed necessary by the CCWA Engineer.

2.07 Valve Size and Location

A. Valves shall be of the same size as the pipe in which the valve is situated, unless noted otherwise.

B. A corporation valve shall be situated at the tap location into a water main of a three-quarter (3/4) inch or one (1) inch service line.

C. Gate valves shall be situated in-line with water mains as follows, unless noted otherwise. The placement of gate valves under pavement shall not be allowed.

1. Attach tapping gate valve immediately downstream of tapping saddle or

tapping sleeve when tapping into water main with a water main or service line.

2. Situate gate valve immediately downstream of a tee when connecting into a water main.

3. Situate gate valve on each immediate side of a three (3)-way connection or four (4)-way connection.

4. Situate gate valve within street right-of-way when fire service extends beyond right-of-way.

5. Situate gate valve in water mains at a maximum spacing of 2,000 feet, at every other fire hydrant or as directed by the CCWA Engineer.

6. A slip type valve box shall be situated over each gate valve, unless otherwise directed by the CCWA Engineer.

D. Gate valve shall be situated immediately upstream and downstream of two (2) inch and larger water meter/check valve assemblies and other appurtenances as directed by the CCWA.

E. A curb stop shall be situated inside of meter box immediately upstream of three-quarter (3/4) inch through one (1) inch water meter/check valve assemblies.

F. A gate valve shall be installed between each fire hydrant and water main.

2.08 Thrust Restraint

A. Concrete blocking shall be designed using 2,500 psf soil bearing pressure and appropriate test pressure.

B. Thrust restraint shall be installed at all fittings, hydrants, valves and other locations deemed necessary by the CCWA Engineer.

C. Thrust restraints at hydrants and valves shall be accomplished by installing a minimum of two (2) eyebolts on the hydrant or valve and tying to an adjacent fitting or concrete tie-back using three-quarter (3/4) inch threaded rod. Hydrant tees may be used in conjunction with fire hydrants.

D. Thrust restraint at fittings shall be accomplished by using one of the following methods:

1. Cast-in-place concrete blocking installed to dimensions as shown on thrust block detail.

2. Restrained joint pipe and fittings installed upon approval by the CCWA Engineer.

3. Threaded rod between fittings to form a mechanical system.

4. Combination of above items or other requirements as directed by the CCWA Engineer.

2.09 Water Meters and Backflow Prevention

A. All water usage including fire and irrigation shall be metered and have state approved backflow prevention devices.

B. All water usage shall be metered using a single meter when possible.

C. Meters shall be sized according to the AWWA Standard using the fixture count.

D. Each meter shall have a backflow device consisting of dual check valve assembly or higher level of protection.

E. Water meters and backflow devices shall be housed in boxes or vaults.

F. Water meters and backflow devices shall be situated within the street right-of-way or easement area.

SECTION 3: MISCELLANOUS

3.01 General

Design requirements not included in Division II, Design Requirements, shall be determined by the CCWA Engineer, on a case by case basis.

3.02 Fire Protection Systems

Sprinkler fire protection systems are considered special designs problems and will be reviewed by the local Fire Marshall. Plans and construction specifications must be approved by the CCWA and above mentioned regulatory agency prior to water main system construction.

This sheet intentionally left blank.

DIVISION III MATERIAL REQUIREMENTS

SECTION 1: MATERIALS

1.01 Applicable Standards

The Utility Contractor shall supply all products and perform all work in accordance with applicable American Society for Testing and Material (ASTM), American Water Works Association (AWWA), and American National Standards Institute (ANSI). Latest revisions of all standards are applicable.

1.02 Quality Assurance

A. If requested by CCWA, the Utility Contractor shall submit evidence that manufacturers have consistently produced products of satisfactory quality and performance for a period of at least ten years.

B. All materials must be first quality, have smooth exterior and interior surfaces as required, free of cracks, blisters and other imperfections. All materials must be true to theoretical shapes and forms throughout its entirety.

1.03 Substitutions

Whenever a product is identified in the specifications by reference to manufacturers' or vendors' names, trade names, catalog numbers, etc., the Utility Contractor may freely choose from those referenced products which ones he wishes to provide. Any item or product other than those so designated shall be considered a substitution. The Utility Contractor shall obtain prior approval from CCWA for all substitutions.

1.04 Acceptance

A. Material acceptance will be on the basis of the CCWA Engineer and the manufacturer’s written certification that the materials were manufactured and tested in accordance with the applicable standards.

B. All materials are subject to inspection by the CCWA at the manufacturer's plant, trench or other location.

C. Any material found to be out of compliance with CCWA specifications shall be removed from the project site. Repair of rejected materials is not permitted.

SECTION 2: POTABLE WATER PIPE AND FITTINGS

2.01 Ductile Iron Pipe Classification

A. Ductile iron pipe shall be Pressure Class 350, unless noted otherwise, in accordance with ANSI/AWWA C151/A21.51, latest revisions.

B. Ductile iron restrained-joint pipe shall be of the bolted joint type or pipe fitted with a fast-grip type gasket provided by manufacturer having a minimum pressure rating of 350 psi in accordance with ANSI/AWWA C110/A21.10 and C151/A21.51, latest revisions.

C. All pipe shall be furnished in lengths of at least eighteen (18) feet.

2.02 PVC Pipe Classification

A. PVC pipe must be covered during transportation and delivery to the project site to prevent exposure to diesel fumes or other harmful agents. Pipe not protected properly may be rejected by the CCWA Engineer.

B. All PVC pipe is to be in accordance with ASTM D2241. PVC material shall conform to ASTM D1784. Pipe must be approved by the National Sanitation Foundation (NSF) and bear the NSF logo.

C. PVC pipe shall have push-on joints with integral bell and locked in gasket and shall conform to ASTM D3139. The bell shall consist of an integral wall section with a locked-in, solid cross section elastomeric ring which meets the requirements of ASTM 477. Pipe must have a Fluid-Tite integral bell joint with built-in expansion joint.

D. PVC pipe two (2) inches in diameter shall be SDR 13.5, 315 psi.

E. Two (2) inch PVC pipe shall be used as casing material for long side copper service lines.

2.03 Fitting Classification

A. Ductile iron fittings for use with push-on joint pipe shall be standard mechanical with gland restraint with a minimum pressure rating of 350 psi in

accordance with ANSI/AWWA C110/A21.10 and C151/A21.51, latest revisions.

B. Use of push-on joint type fittings and lugged restraining glands shall be permitted as directed by the CCWA Engineer.

C. Ductile iron flanged fittings shall be in accordance with ANSI/AWWA C110/A21.10, latest revision and meet minimum pressure ratings as determined by the CCWA

D. Ductile iron restrained-joint fittings shall be of the flex-ring type, Mega-Lug or fitted with a fast-grip type gasket having a minimum pressure rating of 350 psi in accordance with ANSI/AWWA C110/A21.10 and C153/A21.53, latest revisions.

E. Fittings shall be furnished with a manufacturer applied coating of six (6) to eight (8) mils of fusion bonded epoxy in accordance with AWWA/ANSI C550 and C121/A21.16.

2.04 Gaskets and Bolted Connections

A. Gaskets for push-on and standard mechanical joints shall be plain rubber (Styrene Butadiene Copolymer) in accordance with ANSI/AWWA C111/A21.11, latest revisions.

B. Gaskets for restrained joints shall be plain rubber (Styrene Butadiene Copolymer) modified with ductile iron or stainless steel teeth in accordance with ANSI/AWWA C111/A21.11, latest revisions.

C. Gaskets for flanged joints shall be 1/8-inch thick, full-faced, clothed reinforced rubber in accordance with ANSI/AWWA C110/A21.10 and C115/A21.15, latest revisions.

D. Bolts and nuts used for flanged connections shall be hex type of low carbon steel, cadmium plated or zinc plated conforming to ASTM A307 in accordance with AWWA C110 and C115.

E. The Utility Contractor is to provide the necessary bolts for mechanical connections. Bolt shall be steel with American regular unfinished square or hexagon heads. Nuts shall be steel with American Standard regular

hexagonal dimensions, all as specified in ANSI B 17.2, and AWWA Clll. All bolts and all nuts shall be treated in accordance with ANSI B 1.1, Coarse Thread Series, Class 2A and 2B fit.

.

2.05 Coatings and Linings

A. Ductile iron fittings shall be coated and lined with six (6) to eight (8) mils of fusion bonded epoxy in accordance with AWWA/ANSI C550 and C121/A21.16. Fittings shall be listed by a certifying agency that the coating complies with ANSI/NSF 61.

B. Ductile iron pipe and fittings placed above the ground surface shall have an exterior manufacturer applied epoxy coating six (6) to eight (8) mils of fusion bonded epoxy in accordance with AWWA/ANSI C550 and C121/A21.16

C. Ductile iron pipe that crosses or runs parallel to a gas transmission main, which is or may be catholically protected, shall be encased in polyethylene tubing, eight (8) mil minimum thickness, and taped in accordance with ANSI/AWWA C105/A21.5.

D. Ductile iron pipe and fittings used in the distribution of potable water shall be cement lined in accordance with ANSI/AWWA C104/A21.4, latest revisions, unless coated with fusion bonded epoxy in accordance with specifications of this section.

2.06 Pipe Marking

The following information shall be cast in or stamped on each pipe or as required by the governing ASTM Standard.

1. Weight, class or nominal thickness.
2. Casting period.
3. Manufacturer’s identifying mark.
4. Date the pipe was manufactured.
5. Pipe size and material.

2.07 Acceptable Manufacturers

Ductile iron pipe shall be domestically manufactured by one of the following:

Acceptable Manufacturers:

1. American Cast Iron Pipe Company.
2. U.S. Pipe Company.
3. Griffin Pipe Company.
4. McWane Pipe Company (6-inch and 8-inch only).

PVC Pipe: 2-inch PVC pipe shall be domestically manufactured.

SECTION 3: COPPER PIPE AND FITTINGS

3.01 Pipe Classification

A. Buried service three-quarter (¾) inches in diameter to one (1) inch in diameter shall be seamless, annealed copper tube conforming to the requirements of ASTM B-88, Type “K”.

B. Copper tubing shall be packed in coils or cartoons, when specified.

3.02 Fittings

A. Fittings for annealed copper tube, Type “K”, shall be compression type brass.

B. Meter couplings and tail pieces shall be cast brass threaded type.

Acceptable Manufacturers:

1. Ford Meter Company.
2. Other Approved.

3.03 Water Service Monuments

A. Where curbing exists, cut the symbol “W” in the top of the curb at water service locations using an approved method of cutting the curb.

This sheet intentionally left blank.

SECTION 4: VALVES AND ACCESSORIES

4.01 Gate Valve

A. Valves two (2) inches in diameter shall be as follows:

1. Valves shall be cast iron construction.

2. Valves shall have resilient wedge gate, non-rising stem and square nut operated.

3. Valve end connections shall be threaded to match pipe material in which valve is installed.

4. Valves shall open in a counter-clockwise direction.

Approved Manufacturers

1. Clow.
2. American Darling.
3. M & H.
4. US Pipe.
5. Mueller.
6. Other Approved.

B. Valves four (4) inches to twelve (12) inches in diameter shall be as follows:

1. Water supply valves shall be in accordance with AWWA C509 for resilient seated valves.

2. Valves shall be bronze mounted, beveled geared, with a non-rising stem and O-ring stem seals.

3. Valves shall open in a counter-clockwise direction.

4. Valve end connections shall be flanged or standard mechanical as directed by CCWA.

5. Buried valves shall be nut operated; non-buried valves shall have hand wheel operators.

Approved Manufacturers

1. U.S.
2. American Darling.
3. Mueller.
4. M & H.

C. Gate valves used in conjunction with a tapping saddle shall be as follows:

1. Offset type that allows the tapping device to mount to the pipe and pass through the opened valve.

2. End connection to the tapping sleeve shall be flanged. End connection to accept pipe shall be mechanical joint.

D. Gate valves shall be coated as follows:

1. Valves shall be coated with six (6) to eight (8) mils of fusion bonded epoxy in accordance with AWWA/ANSI C550 and C121/A21.16.

E. The following information shall be cast in or stamped on each valve.

1. Manufacturer's identifying mark.
2. Pressure Class.
3. Valve size and material.
4. Place of Manufacturing.

4.02 Butterfly Valve

A. Valves fourteen (14) inches in diameter and larger shall be butterfly type in accordance with AWWA C504.

B. Materials used in the fabrication of the valve shall meet all related requirements of ASTM.

C. Valve bodies shall be ductile iron with integrally cast flanged ends or standard mechanical ends as directed by CCWA. Flange drilling shall be in accordance with ANSI B16.1.

D. Valves shall be bubble tight at rated pressures with flow in either direction and shall be capable of throttling service.

E. Valve disc shall rotate 90º from full open position to tight shut position.

F. Valves shall be tight closing, rubber seated with seats applied to the body or disc. Valve seats on 30 inch and larger diameter valves shall be field adjustable and replaceable without dismounting operator, disc or shaft and without removing valve from pipe. Mating seat shall be stainless steel or as approved by CCWA.

G. Valves shall be fitted with sleeve type bearings contained in hubs of valve body. Bearings shall be corrosion resistant and self-lubricating.

H. Valve operators shall hold valve in any intermediate position between full open and full close without creeping or fluttering.

1. Manual operators shall be worm gear or traveling nut type and shall be fully enclosed.

2. Valves for buried service shall be furnished with a ground level valve position indicator unless otherwise approved by the CCWA Engineer.

3. Valves shall open when turning operator in a counter-clockwise direction.

I. Valves shall be coated as follows:

1. Valves shall be coated with six (6) to eight (8) mils of fusion bonded epoxy in accordance with AWWA/ANSI C550 and C121/A21.16.

<u>Acceptable Manufacturers:</u>

1. U.S.
2. American Darling.
3. Mueller.
4. M & H.
5. Other Approved.

4.03 Cross-Connection Control Devices

A. Cross-connection control devices shall be installed as directed by the CCWA and in accordance with their cross-connection control program.

Acceptable Manufacturers

1. As Approved.

4.04 Pressure Reducing Valves

A. Requirements for pressure reducing valves shall be determined at the time of submittal on a case by case basis by the CCWA Engineer.

Acceptable Manufacturers

1. As Approved.

4.05 Corporation Valve

A. Corporation valves shall be of the Teflon ball valve type and manufactured of bronze in conformance with ASTM B61, ASTM B62 and NSF 61.

B. Corporation valves shall withstand a working pressure of 300 psi or greater.

C. Corporation valves shall have crosscut threading for connection to tapping saddle, outlet end suitable for compression type joint or other end styles if requested by the CCWA Engineer.

D. Threaded ends for inlet and outlet shall conform to AWWA C800.

Acceptable Manufacturers

1. Ford Meter Box Co (FB 1000).
2. Other Approved.

4.06 Curb Stop

A. Curb stops shall be of the Teflon ball valve type and manufactured of bronze in conformance with ASTM B61, ASTM B62 and NSF 61.

B. Curb stops shall withstand a working pressure of 300 psi or greater.

C. Curb stops shall be fitted with wing locks suitable to accept a keyed padlock.

D. Ends shall be suitable for compression type joint.

Acceptable Manufacturers

1. Ford Meter Box Co (B43-232WQ).
2. Other Approved.

4.07 Valve Box

A. All valves shall be equipped with heavy roadway type valve boxes.

B. Valve boxes shall be of the adjustable two-piece screw type 24” X 36” high compaction and support under the main in order to prevent deflection of the water main and manufactured of cast iron.

B. Valve boxes shall have an internal diameter of 5.25 inches.

C. Valve boxes shall have a concrete pad around the top of the box at finished grade.

D. Extension stems will be provided where required to provide flush with ground top or as directed by the CCWA Engineer.

Acceptable Manufacturers

1. Higgins Foundry.
2. U.S. Foundry.
3. Opelika.
4. Sigma.
5. Other Approved.

4.08 Valve Monuments

A. Monuments and/or markings are required to identify valve locations in the field.

B. Where curbing exists, cut the symbol “V” in the top of the curb at valve locations using an approved method of cutting the curb.

C. Concrete valve monuments shall be installed for each valve excluding fire hydrant watch valves. The monuments shall be located adjacent to the valve or as directed by the CCWA Engineer.

SECTION 5: TAPPING SLEEVES

5.01 Tapping Sleeve

A. Tapping sleeves shall be of the split type, mechanical joint type and manufactured of ductile iron or stainless steel (preferred). Stainless steel sleeve shall be used when tapping cast iron pipe. Ductile iron shall be coated with six (6) to eight (8) mils of fusion bonded epoxy in accordance with AWWA/ANSI C550 and C121/A21.16. Stainless Steel shall be type 304 (18-8).

B. Sleeve outlet shall be flanged and mechanical joint connection to the branch pipe.

C. Prefabricated tapping sleeves may be used on PVC pipe, if authorized by the CCWA Engineer.

D. Wet tapping of six (6) inch and larger subdivision mains to the existing CCWA distribution system shall be made using prefabricated tapping sleeves.

E. Back taps and swing joints shall not be made unless specifically authorized by the CCWA Engineer.

5.02 Tapping Saddle

A. Ford bronze tapping saddles shall be used for all taps on main sizes two (2) inch.

B. Taps on six (6) inch and larger mains shall be made using double strap iron body tapping saddles with O-ring gaskets to fit against pipe.

Approved Manufacturers

1. Smith Blair.
2. Mueller.
3. Ford Meter Company.
4. Dresser.
5. Rockwell.
6. Other Approved.

This sheet intentionally left blank.

SECTION 6: WATER METERS AND METER BOXES

6.01 Water Meters

A. After Final Acceptance, residential water meters shall be provided by the CCWA, upon receipt of applicable current fees as set by the CCWA.

B. The CCWA must approve all commercial, industrial, fire service and combination meters.

6.02 Water Meter Boxes (Residential)

A. Meter assemblies ranging in size from three-quarter (3/4) inch to one (1) inch shall be housed in meter boxes manufactured from high-density polyethylene.

B. Standard meter boxes shall be twelve (12) inches in height and bottom of box shall measure a minimum of twenty-one (21) inches in length and fifteen three-quarter (15 3/4) inches in width.

C. Cast iron lids with short legs shall be supplied with each meter box.

Acceptable Manufacturers - Model

1. DFW – D1200.
2. Brooks.
3. Carson.
4. Other Approved.

6.03 Water Meter Vaults (Commercial, Industrial, Fire Service and Combination)

A. All vaults must be approved by the CCWA Engineer prior to installation.

B. Vaults shall be constructed of pre-cast concrete.

C. Vaults shall be able to support a concentrated wheel load of 2,500 lbs.

D. Vaults shall be sized as directed by the CCWA Engineer.

E. An aluminum access hatch shall be cast in the cover slab. The access hatch shall be sized and situated as directed by the CCWA Engineer.

F. Pipe penetrations (annulus between concrete and outside face of pipe) shall be sealed with boot and clamps.

G. Vault cover shall extend three (3) inches above finished grade.

Acceptable Manufacturers

1. As Approved.

6.04 Vault Access Hatches

A. Vault access hatch size, material and configuration must be approved by the CCWA Engineer.

B. Hatch shall be able to support a 150 psf live load.

C. Access hatch shall have a manual locking arm device to prevent hatch lids from closing.

D. Access hatch shall be capable of being secured using a keyed lock.

Acceptable Manufacturers

1. As Approved.

SECTION 7: HYDRANTS

7.01 Fire Hydrants

A. Fire hydrants shall be of the compression type, closing with line pressure, complying with AWWA C502 for minimum 200 psi working pressure and NFPA, 1993 edition. Hydrant valve opening shall not be less than 4-1/2 inches.

B. Hydrants shall have a non-freeze design and an automatic drain that closes fully when hydrant valve is opened.

C. Minimum depth of hydrant burial shall be 4'-0" or as existing water main depth dictates. Deeper burying depths shall be accomplished using extension kits provided by same manufacturer.

D. Hydrant standpipe, fittings and upper barrel shall be ductile iron. Parts designed to break away may be cast iron.

E. Hydrants shall be furnished with a mechanical joint shoe connection to the spigot of the six (6) inch hydrant lead and have a valve at the connection with the water main.

F. The means of attaching the barrel to the standpipe shall permit 360º rotation of the barrel.

G. Hydrant barrels shall break away from the standpipe at an elevation above ground level without causing damage to the standpipe and stem. When barrel is broken away, internal valve shall function and repairs shall be permitted without excavating or turning off water supply.

H. Hydrants shall be bronze mounted and all internal working parts shall be bronze. Valve seat ring shall be bronze and screw into a bronze retainer.

I. Internal working parts shall be removable without disturbing the barrel.

J. The operating nut situated atop the hydrant shall be hexagonal and constructed of ductile iron or cast iron and open in a counter clockwise direction. The threads shall be enclosed in an operating chamber separated from the hydrant barrel by a rubber O-ring stem seal lubricated by a grease or oil reservoir.

K. Hydrant shall be equipped with two 2-1/2 inch threaded (7.5 threads per inch) hose connections and one 4-1/2 inch threaded (4 threads per inch) hose connection. Hose and pump connections shall be threaded and pinned to seal the connection to the barrel. Threads shall comply with National Standard Threads. Each connection shall be equipped with a cap and chain.

Acceptable Manufacturers – Product

1. American Darling – Mark-73.
2. Mueller – A-421.
3. M & H – 129T.
4. US – Metropolitan 250.
5. Clow – Medallion.

SECTION 8: CASING AND TUNNEL LINERS

8.01 Casing

A. The Utility Contractor shall furnish all material and equipment to install steel pipe casing at the locations as shown on the construction plans or as directed by the CCWA Engineer.

B. Materials shall be in accordance with AREA, ASSHO, Georgia Department of Transportation and other required applicable standards.

C. Steel casing shall be Schedule 30 steel pipe manufactured from steel conforming to ASTM A139, Grade B.

D. All case bores with carrier pipes, six (6) inch and larger in diameter, shall have carrier pipes of either ductile iron with locking gaskets or prefabricated spacers.

E. Ends of casing shall be sealed as directed by the CCWA Engineer.

F. The minimum casing size and minimum wall thickness shall be as follows:

Pipe Diameter (in.)	Casing Diameter (in.)	Wall Thickness (in.)
4	8	0.330
6	12	0.330
8	16	0.375
10	16	0.375
12	18	0.375
14	24	0.562
16	36	0.625
18	36	0.625
20	36	0.625
24	36	0.625

G. If more stringent requirements are required by local, state or federal agencies, then the more stringent regulations shall be required.

H. The CCWA may allow 0.250” casing on a case by case basis for driveway and County road crossings. The Contractor must obtain approval from CCWA prior to ordering materials.

This sheet intentionally left blank.

SECTION 9: ENVIRONMENTAL COATINGS

9.01 Materials Requiring Coatings

A. Materials for buried surface shall be coated as indicated in their respective section.

B. The following materials shall have exterior coatings manufacturer applied.

1. Piping and appurtenances
2. Supports
3. Pumps
4. Valves
5. Equipment and appurtenances

This sheet intentionally left blank.

SECTION 10: PAVEMENT

10.01 General

A. All pavement materials including graded aggregate base, black base, surface course and concrete shall conform to the Georgia State Highway Department of Transportation Specifications or local regulatory agencies.

B. All driveways, sidewalks and curbs shall be replaced with the same material as existing.

This sheet intentionally left blank.

SECTION 11: MISCELLANOUS MATERIALS

Materials not covered in Division III, Material Requirements, shall be in accordance with the approved plans or as directed by the CCWA Engineer.

This sheet intentionally left blank.

DIVISION IV CONSTRUCTION STANDARDS

SECTION 1: GENERAL

1.01 Contractor License

A. A qualified licensed Utility Contractor meeting CCWA requirements shall install all water distribution system components.

B. Prior to commencing construction activities on a CCWA approved project, the CCWA Engineer shall receive a copy of the Utility Contractor's state issued license.

1.02 Utility Notification

A. The Official Code of Georgia, Title 25, Chapter 9 requires that utilities be located in the proposed work area prior to commencing any clearing, grading or excavation activity.

B. The Utilities Protection Center can be reached at (770) 623-4344 or 1-800-282- 7411.

C. The Utilities Protection Center shall be notified at least three (3) business days prior to commencing work.

1.03 Work Commencement

A. Clearing and grubbing activities shall not commence on any project until Carroll County Community Development has issued a Land Disturbance Activity permit.

B. Work on a water distribution system shall not begin until the CCWA approves the water distribution system construction plans.

C. The CCWA Engineer shall receive a 48-hour notice prior to commencing construction activities on a water distribution system.

D. A set of construction plans approved by the CCWA shall be present on the job site during all phases of construction of the water distribution system.

E. If construction plans require curb and gutter, then the installation of water distribution piping shall not begin until curb and gutter has been installed.

1.04 Traffic Control

The Utility Contractor is to provide and maintain suitable signs, barricades, and lights for protection of traffic in accordance with standard Ga. DOT requirements. All highway signs removed for construction shall be replaced at the end of each day. The contractor shall not close or block any highway, street, or roadway without first obtaining permission from the proper authorities. Experienced flagmen should be provided to direct and expedite the flow of traffic

1.05 Protection of Persons and Property

A. Prior to commencing work, accurately locate above and below ground utilities and structures which may be affected by the work, using whatever means appropriate. Mark the location of existing utilities and structures, not otherwise readily visible, with flagging, stakes, barricades, or other suitable means.

B. Protect structures, utilities, sidewalks, pavements, and other facilities immediately adjacent to excavations, from damage caused by settlement, lateral movement, undermining, washout and other hazards. The Utility Contractor is responsible for any damage caused to existing infrastructure during construction.

C. Maintain all streets, sidewalks, crossings, fire hydrants, water and gas valves, fire alarm boxes, and other utilities accessible for their intended use.

D. Keep every drain, gutter, culvert, sewer, and surface drainage route encountered, open for both temporary and permanent flow unless other effective provision for drainage is made.

E. Do not permit any hazardous condition to result from trenching and backfilling operations.

1.06 Protection of Existing Trees and Vegetation

A. Protect existing trees and other vegetation against unnecessary cutting, breaking or skinning of roots, skinning and bruising of bark, smothering of trees by stockpiling construction materials or excavated materials within drip lines, excess foot or vehicular traffic, or parking of vehicles or equipment within drip line. Provide temporary fences, barricades or guards as required to protect trees and vegetation to be left standing.

B. Provide protection for ornamental tree roots over l-l/2 inches diameter that are cut during any construction operation. Coat the cut faces with an emulsified asphalt, or other acceptable coating, especially formulated for horticultural use on cut or damaged plant tissues. Temporarily cover all exposed roots of ornamental trees with wet burlap to prevent roots from drying out; provide earth cover as soon as possible.

C. Repair or replace unnecessarily damaged trees and vegetation, as determined by the CCWA Engineer, resulting from any construction operation, in a manner acceptable to the property owner and the Engineer. Tree damage repair shall be performed by a qualified nurseryman. Replace unnecessarily damaged trees which cannot be repaired and restored to full-growth status, as determined by the tree surgeon.

1.07 Use of Explosives

A. The Utility Contractor shall provide experienced workmen to perform blasting. All blasting operations shall be conducted in accordance with all existing ordinances and regulations. The Utility Contractor shall protect all structures from the effects of the blast and repair any resulting damage. The Utility Contractor will secure the necessary permits and is solely responsible for any damage occurring as the result of the blasting. The Utility Contractor shall notify CCWA prior to any blasting operations.

B. Do not bring explosives onto site or use in work without prior written permission from authorities having jurisdiction.

C. Use explosives only as legally permitted and when other work methods are impractical.

D. Do not permit explosives on the project site other than during the least practicable use period.

E. The Utility Contractor assumes sole responsibility for handling, storage, and use of any explosive materials.

1.08 Miscellaneous Standards

Construction standards not covered in Division IV, Construction Standards, shall be in accordance with the approved plans or as directed by the CCWA Engineer.

SECTION 2: MATERIAL DISTRIBUTION

2.01 General

A. Work covered by this section shall include all labor, equipment and accessories required to distribute material.

B. All materials installed shall be new.

2.02 Delivery

A. The Utility Contractor shall furnish equipment and facilities for unloading and distributing pipe, equipment and materials.

B. The Utility Contractor shall notify the CCWA Engineer at least twenty-four (24) hours prior to the delivery of materials.

C. PVC pipe must be covered during transportation and delivery to the project site to prevent exposure to diesel fumes or other harmful agents. Pipe not protected properly may be rejected by the CCWA Engineer.

2.03 Handling

A. Pipe shall be handled by use of forklift or excavator using choker straps or cable.

B. Any pipe, equipment or material dropped or dumped during handling procedures shall be subject to rejection by the CCWA without further justification.

C. Materials shall be handled carefully to prevent shock or damage.

2.04 Distribution

A. Materials shall be distributed and placed so as not to interfere with pedestrian access, traffic flow or drainage pathways or ditches.

B. Materials will not be strung out more than 1,000 feet beyond the work area where pipe is currently being installed.

2.05 Storage

A. Pipe shall not be strung more than 1,000 feet beyond the point where pipe is being installed.

B. Drainage ditches shall not be obstructed.

C. The Utility Contractor shall make necessary arrangements to store pipe, fittings, valves and accessories that cannot be distributed along the route.

2.06 Maintenance and Protection

A. The contractor shall be responsible for maintenance and protection of all pipe, equipment and material.

B. All equipment shall be boxed, crated or otherwise completely enclosed and protected during transportation, handling and storage.

C. Equipment shall be stored above ground level and adequately supported on wood blocking or other approved support material.

D. All equipment shall be protected from exposure to elements and shall be kept dry at all times.

E. Pumps, motors, valves, control panels, instrumentation, electrical equipment and other equipment having anti-friction or sleeve bearings shall be stored in a weather-tight enclosure within temperature limits as specified by the manufacturer.

F. Any pipe, equipment or material damaged by impact, vibration, abrasion, discoloration or other damage shall be repaired in accordance to manufacturer instructions or replaced at the discretion of the CCWA.

SECTION 3: EROSION AND SEDIMENT CONTROL

3.01 General

A. The arrangement, location, and operating techniques relating to the erosion and sediment control measures necessary to accomplish the work and satisfy the requirements specified herein and by other local agencies is the sole responsibility of the Utility Contractor.

B. Coordinate erosion control features to provide effective and continuous erosion control throughout the construction and post construction period.

C. Maintain erosion control measures at all times. Install additional erosion and sediment control measures if deemed necessary after onsite inspection by the CCWA Engineer or regulatory agency.

D. The Utility Contractor shall plan construction activities to minimize erosion of work site. The amount of open excavation shall be limited to the least practicable to minimize erosion.

E. The Utility Contractor shall prevent sediment from leaving the work site.

F. The Utility Contractor shall comply with industry standards and applicable Laws and Regulations of authorities having jurisdiction, including but not limited to the following which are included into this document by reference.

1. Environmental protection regulations.

2. Georgia Erosion and Sedimentation Control Act of 1975, including amendments.

3. Manual for Erosion and Sediment Control in Georgia, latest edition.

4. Carroll County Community Development and Code Enforcement regulations.

G. The Utility Contractor is responsible for complying with the Corps of Engineers wetland protection regulations.

3.02 Stream and Ditch Crossings

A. At all stream and ditch crossings, the Utility Contractor shall place rip-rap along entire area of disturbed ground as determined by the CCWA Engineer.

B. Disturbed areas adjacent to streams and ditches may require rip-rap if deemed necessary by the CCWA Engineer.

C. Stone rip-rap shall be composed of sound, tough durable stones resistant to erosion.

D. Rip-rap size shall be as shown on the construction drawings or as determined by the CCWA Engineer.

E. Rip-rap shall extend from one (1) foot below the stream or ditch bed to the top of the bank and shall be placed to conform to the natural slope of the area.

F. The Utility Contractor shall embed the rip-rap to form a compact layer at least twelve (12) inches thick. The rip-rap will be placed so that the smaller stones are not segregated, but evenly distributed. Smaller stones shall be placed between the larger stones so that a dense, well graded rock mass is produced.

SECTION 4: SITE PREPARATION

4.01 Clearing and Grubbing

A. Prior to commencing clearing activities, areas designated to be cleared shall be marked using survey ribbon, stakes or other suitable means.

B. In areas to be cleared, all trees, stumps, buried logs, brush, grass and other unsatisfactory materials shall be removed.

C. Trees to remain in or near work area shall be protected from clearing activities.

D. All damaged trees shall be repaired in accordance with Division IV, Section 1.06.

E. All holes remaining after grubbing activities shall be filled with suitable material and properly compacted in layers to density required for in-place backfill.

F. All materials cleared and grubbed shall be disposed of in accordance with applicable local, state and federal codes and regulations.

G. Prior to and upon completion of clearing and grubbing activities, install erosion control and sedimentation measures as identified on the Erosion Control and Sedimentation Plan prepared by the Design Engineer.

H. Prior to excavating or trenching, all permanent easements shall be cleared unless otherwise directed by CCWA.

I. Clearing of construction easements is permitted with care taken to adhere to requirements of this section and Division IV, Sections 1.05 and 1.06.

J. Prior to commencing any other job site activity, installed erosion control and sedimentation measures as approved by Carroll County Community Development.

4.02 Topsoil Stockpiling

A. Remove topsoil to full depth encountered in areas to be graded and stockpile

soil and install erosion control devices as indicated on drawings.

B. Soil shall be placed such that the integrity of an excavation or proposed excavation is not jeopardized.

4.03 Removing Pavement

A. Removal of pavement shall be performed so as not to endanger roadway activity. Work shall be coordinated and be in compliance with the appropriate road and highway agencies codes and regulations.

B. Pavement shall be marked squarely and neatly to size of excavation.

C. Pavement shall be scored and broke along the marked lines using a rotary saw and jackhammer. Pavement shall not be machine pulled for initial brake.

D. Upon removal, pavement shall be loaded and disposed of off-site.

E. Adjacent pavement damaged during construction shall be removed as described above. The contractor is responsible for removing and replacing damaged pavement.

F. Curbs shall be removed for the entire length from control joint to control joint.

SECTION 5: EXCAVATION

5.01 General

A. All excavation shall be performed in accordance with applicable federal, state and local regulations, including the Occupational Safety and Health Act of 1970 (PL 91-596), as amended.

B. Excavation includes the removal and disposal of all materials encountered, including rock, necessary for the installation of the water distribution system as outlined within these specifications.

5.02 Soil Excavation

A. Excavation shall include those measures necessary to establish grades indicated on drawings for utilities, structures and appurtenances.

B. Excavated soil shall be placed in a location such that the integrity of the excavation is not jeopardized.

C. Excavation walls shall be sloped or stepped in accordance with recognized industry standards.

D. The Utility Contractor shall assume the responsibility for design and construction of excavation shoring and bracing capable of supporting excavations and construction loads.

E. The excavation shall provide space for foundation work and inspection.

F. Excavations shall be covered in accordance with applicable regulations and/or barricaded and roped-off with identifying tape during work progress.

5.03 Rock Excavation

A. Excavation shall include those measures necessary to establish grades indicated on drawings for utilities, structures and appurtenances.

B. Rock shall be excavated to a minimum depth of twelve (12) inches below required grade and minimum of six (6) inches around pipe and appurtenances.

C. The Utility Contractor shall be responsible for determining methods required for removal of rock or hard materials.

D. Perform blasting only after consulting with the CCWA and regulatory agencies. The Utility Contractor is responsible for obtaining all necessary permits.

E. A licensed explosive contractor shall perform blasting operations.

F. Blasting operations shall be conducted in accordance with all local, state and federal regulations.

G. The contractor shall protect all structures from the effects of the blasting and repair any resulting damage.

H. Excavated rock shall not be used as backfill in the pipe trench.

.

5.04 Pipe Trench Excavation

A. Pipe trenching shall comply with excavation and rock excavation specifications.

B. Trench should be excavated to natural undisturbed soil.

C. Trenches shall be excavated to provide a minimum of four (4) feet of cover above the top of the pipe unless otherwise directed by the CCWA Engineer.

D. Trenches shall be excavated wide enough to allow proper installation of pipe, fittings and other materials with not less than three (3) inches from the outside of the pipe, fitting or other material to the side of the trench at any point.

E. Where unsuitable material is encountered, over excavate through unsuitable material and backfill to required grade with suitable material as determined by the CCWA Engineer.

F. Where encountered, remove rock to a minimum of twelve (12) inches below required bottom of trench elevation and backfill to at least two (2) feet above top of pipe with suitable material as determined by the CCWA Engineer.

G. Bottom of trenches shall be prepared so that the entire length of the pipe barrel is supported.

H. Maintain trenches dry at all times using pumps, well points or other dewatering means.

I. Limit trenching to not greater than 300 feet ahead of completely backfilled work.

J. In populated areas, cover or barricade open trenches until completely backfilled.

K. Open trenches shall be made safe at all times.

L. The Utility Contractor shall excavate all materials encountered, including rock, and dispose of excess excavated material not required for backfilling. All excavation shall be performed in accordance with applicable local, state, and federal regulations, including the Occupational Safety and Health Act of 1970 (PL 91-596). The Utility Contractor shall maintain sides and slopes of excavations in a safe condition until completion of backfilling.

M. At each joint, the Utility Contractor shall excavate bell holes of ample depth and width to permit the joint to be made properly and to relieve pipe bell of any load. At no time shall the bells of the pipe rest on the trench bottom.

N. The Utility Contractor shall excavate and prepare the trench bottom to support the pipe uniformly throughout its length. For both ductile iron pipe and PVC pipe, the trench shall meet all requirements of Standard Laying Condition Type 2 in accordance with AWWA C151.

This sheet intentionally left blank.

SECTION 6: INSTALLATION

6.01 Pipe Bedding

A. Pipe shall be laid in clean bedding material, free of rock, organics and other materials which, in the opinion of the CCWA Engineer, are unsuitable.

6.02 Pipe, Fitting, Valve and Fire Hydrant Installation

A. Prior to placement, the interior of pipes, fittings and valves shall be cleaned free of dirt and debris. Care shall be taken to keep the pipeline clean at all times.

B. Pipe, fittings, valves and accessories shall not be laid or jointed in water. The Utility Contractor is responsible for dewatering of trench.

C. Pipe, fittings, valves and accessories shall be lowered into their respective positions by suitable means. The materials shall not be dumped or dropped into the trench. A slight hole shall be dug where pipes are to be jointed to relieve pipe bell of any load. Pipe barrel shall be supported for its entire length.

D. Pipe alignment shall not be deflected greater than the manufacturer's recommended maximum deflection.

E. Install compression type gaskets in accordance with manufacturer's instructions to ensure proper joint sealing.

F. Pipe shall be jointed in accordance with manufacturer's instructions. The mating ends (bell and spigot) shall be thoroughly cleaned and soaped before jointing. The mating ends shall be aligned and brought together using a steady force.

G. Connections of fittings, valves and fire hydrants shall be with bolts and nuts as supplied with the component.

H. Retaining gland of mechanical joint shall be evenly spaced from the fitting or valve for its entire circumference upon installation.

I. After jointing pipe, repair any damage to pipe's protective coating in

accordance with manufacturer's instructions or replace pipe.

J. Place a plug in the open end of uncompleted laid piping at the end of each day. If necessary to backfill over the end of an uncompleted pipeline, the end shall be closed with a mechanical joint plug.

K. The CCWA Engineer shall observe the water main construction before it is covered. Any covered construction not inspected shall be excavated and the pipe inspected and/or pipe removed before construction continues at the discretion of the CCWA Engineer.

L. Pipe shall be laid in straight alignment of gradient or follow true curves as nearly as practical.

M. The Utility Contractor shall excavate, install the pipe and backfill as closely together as possible. Pipe not installed shall not be left in the trench overnight.

N. A 14 gauge solid wire shall be installed with the pipe. Wire nuts shall be used for all connections.

O. All joints shall be made in accordance with applicable ASTM and ANSI/AWWA Standards.

P. Fire hydrants shall be set atop a minimum of eighteen (18) inches of No. 57 stone. Stone shall extend up six (6) inches above drain holes. Stone shall extend eighteen (18) inches to the sides of the hydrant

6.03 Thrust Blocking

A. Thrust blocking shall be installed at all bends, tees, valves, fire hydrants and points where thrust may develop in pressurized piping.

B. Thrust blocking shall consist of cast-in-place concrete, tie rods, combinations thereof or other method approved by the CCWA Engineer.

C. Cast-in-place concrete blocking shall be formed to the required dimensions and installed against undisturbed earth. Blocking size may be increased based on soil bearing capacity.

D. Concrete shall have a minimum 3,000 psi compressive strength at 28 days. Ready-mixed concrete shall be mixed and transported in accordance with ASTM C94.

E. Reinforcing steel shall conform to the requirements of ASTM A615, Grade 40.

F. The contractor shall form and pour concrete blockings and thrust restraints per CCWA standard details or as directed by the CCWA Engineer.

G. Concrete Blocking shall be poured against undisturbed, suitable earth.

H. Bolts and nuts shall be protected from concrete coverage.

6.04 Meter Box and Vault Installation

A. Meter boxes shall be installed as follows.

1. Meter box shall be set atop undisturbed or compacted soil. Backfill around box shall be compacted using a hand tamp.

2. Top of meter box shall be set flush with finished grade. Meter box shall not be set in a depression.

3. Soil level within meter box shall be to the bottom of the meter assembly and free of debris.

B. Meter vaults shall be installed as follows.

1. Meter vault shall be bedded atop undisturbed or compacted soil. Backfill around vault shall be compacted in accordance with these specifications.

2. Vaults shall be set atop a minimum six (6) inch layer of No. 57 stone that extends a minimum of twelve (12) inches beyond the outside face of all walls.

3. The bedding of No. 57 stone may be replaced with a six (6) inch layer of steel reinforced cast-in-place concrete.

4. The stone filled sump beneath vault drain shall be fully encased in a geofabric membrane.

5. The bed shall be prepared so that vault is set level.

6. Annulus between pipe and wall openings shall be bricked and grouted with non-shrink grout prior to commencing backfill operations.

7. Prior to installing vault cover, tongue-and-grooved ends shall be cleaned free of dirt and debris.

8. Tongue-and-grooved ends shall be fitted with preformed gasket sealing compound.

9. Vault lid lifting holes shall be sealed using non-shrink grout throughout the entire depth of hole.

10. Vault shall be kept free of dirt and debris.

11. Top of vault lid shall be set three (3) inches above finished grade. Vault shall not be set in a depression.

6.05 Borings and Casings

A. The Utility Contractor shall operate well points or drainage systems in the vicinity of the tunnel or casing construction to prevent the accumulation of water in the tunnel or casing and to maintain the groundwater table below the tunnel or casing invert.

B. Construction shall be performed so as not to interfere with, interrupt or endanger roadway and railway surface and activity thereon, and minimize movement of the surface, structures and utilities above and in the vicinity of the casing.

C. Work shall be coordinated and be in compliance with the appropriate highway and railroad agencies and their policies.

D. Contractor shall monitor ground movement during construction. Contractor shall be responsible for all settlement or up heave resulting from casing operations and shall repair and restore moved or damaged property to its original condition.

E. Work shall not interfere with storm water drainage devices. Storm water and/or groundwater shall be controlled and shall not enter any excavation or boring.

F. Boring and jacking operations shall be performed from an excavation located at one end of the section to be bored. The excavation shall be kept dry at all times.

G. Boring and jacking of casings shall be completed by dry auger boring without jetting, sluicing or wet boring. Free boring (boring without casing) shall be prohibited. The boring diameter shall be essentially the same as the outside diameter of the casing.

H. Horizontal and vertical alignment of the casing shall be frequently checked. If bore is off alignment, then the CCWA Engineer may require the bore be abandoned and re-bored to proper alignment.

I. When rock is encountered, the Utility Contractor shall continue to install the casing by removing the rock through the casing. If the rock cannot be removed through the casing then an alternate means of crossing shall be evaluated.

J. Casings damaged during installation shall be repaired. Should the damaged casing prevent the installation of the pipe, then that boring and casing shall be abandoned.

K. Casing lengths shall be as long as practical. Jointing shall be accomplished by single grooved butt welding for the entire circumference of the pipe.

L. Casing shall be cleaned free of dirt and debris prior to installing pipe.

M. After casing installation is complete, the proposed pipe can be installed. The pipe shall be installed to proper grade and alignment according to the contract documents.

N. A minimum of two (2) spacers shall be provided for each nominal section of pipe. Casing spacers shall be attached to the pipe at a maximum of 18 to 20 foot intervals.

O. The annulus between the pipe and casing, at each end, shall be sealed as directed by the CCWA Engineer.

P. After installation the casing shall be cleaned using a cleaning plug if necessary.

Q. The Utility Contractor shall provide all necessary bracing, bulkheads, shoring or other safety and construction equipment to safely complete the boring work without harming existing infrastructure.

R. Any abandoned casings shall be filled with concrete grout throughout the casings entire length, in addition all spaces and voids around the casing must be filled with grout.

6.06 Pipe and Valve Identification

A. Install a 14 gauge solid, detectable wire, during backfill operations. Use wire nuts for all wire connections.

B. Service lines and valves shall be locatable via marked curbing or other CCWA approved method. Adjacent street curb to service line and valves shall be marked via saw-cut as follows. Curb markings shall be a minimum of four (4) inches in height.

1. “W” for water service location.
2. “V” for water valve location.

SECTION 7: BACKFILL AND COMPACTION

7.01 Backfill

A. Excavations shall be backfilled using suitable material. Backfill filling of trenches with excavated rock material is not permitted. If necessary, the contractor shall furnish suitable material for backfilling. Suitable backfill material will be determined by the CCWA Engineer.

B. Place no backfill on thrust blocking until any poured concrete has developed design compressive strength or directed by the CCWA Engineer.

C. Place backfill in excavations as follows.

1. Initial two (2) feet of backfill above pipe shall be in six (6) inch lifts.

2. Remainder of backfill may proceed in loose lifts not exceeding 6 inches when compacting using manual tamping devices (jumping jack) or in loose lifts not exceeding 12 inches when compacting using vibrating/ramming devices (sheep-foot vibratory roller) or as directed by the CCWA Engineer.

D. Any settlement shall be filled and compacted to conform with adjacent surfaces.

E. Material remaining after completion of backfill operations shall be disposed offsite.

F. Backfill shall commence only after inspection by the CCWA Engineer.

7.02 Compaction

A. Backfill shall be compacted using devices or methods that in the opinion of the CCWA Engineer are not harmful to the water distribution system and appurtenances.

B. Compaction requirements are as follows.

1. Backfill, beneath and within 10 feet of the building line of any structure, proposed structure or other area determined by the CCWA, shall be compacted for the entire depth to a minimum of 100% of the maximum dry

density as determined by a Standard Proctor Analysis.

2. Backfill, beneath any road, walk, proposed improvement or area determined by the CCWA shall be compacted for the entire depth to a minimum of 95% of the maximum dry density as determined by a Standard Proctor Analysis. Final twelve (12) inches of backfill shall be crusher-run.

3. Backfill in road right-of-way and not described above shall be compacted the entire depth to a minimum of 90% of the maximum dry density as determined by a Standard Proctor Analysis.

4. Backfill not described above shall be compacted for the entire depth to a minimum of 90% of the maximum dry density as determined by a Standard Proctor Analysis.

C. If the trenches settle, the contractor shall refill and grade the top of the trench to conform to the adjacent surface.

SECTION 8: SITE COMPLETION

8.01 Grading

A. Grade areas to lines and elevations indicated on drawings or to surrounding surface grades.

B. Graded areas shall not permit ponding of water.

C. In areas to receive grassing, redistribute stockpiled topsoil over graded areas to a minimum depth of four (4) inches. Provide additional topsoil to achieve required depth.

D. Where finish grade meets or abuts curbs, walks or pavement, uphill grades shall be slightly higher than curb or pavement to permit drainage.

E. Excess soil and debris shall be removed from the jobsite.

F. Stabilize site in accordance with the approved soil erosion and sedimentation control plan.

G. The Utility Contractor shall provide a minimum twelve (12) foot shoulder on new streets, as measured from the back of curb or edge of pavement for the installation of underground utilities.

H. The Utility Contractor shall replace and repair yards to existing conditions or better.

8.02 Replacing Pavement

A. Existing pavement shall be replaced in accordance to the standards required by Carroll County Roads Department and/or the Georgia Department of Transportation.

B. Construction shall be performed so as not to endanger roadway activity. Work shall be coordinated and be in compliance with the appropriate road and highway agencies.

C. Pavement shall be reinstalled immediately after completing backfill operations and compaction requirements.

D. Curbs shall be replaced for the entire length from control joint to control joint.

E. Removed pavement shall be disposed offsite.

8.03 Grassing

A. The Utility Contractor shall replant grass removed or damaged during or due to construction activities.

B. All grasses planted must be in compliance with the Manual for Erosion and Sediment Control in Georgia, latest edition.

C. The Utility Contractor is responsible for providing a viable, permanent stand of grass covering a minimum of 95% of the ground.

SECTION 9: TESTING

9.01 General

A. The following tests shall be performed at the expense of the Utility Contractor.

B. The Utility Contractor shall provide all necessary materials and testing equipment required to perform required testing of water distribution systems.

C. Water distribution systems failing the required tests shall be repaired at the expense of the Utility Contractor.

D. Notify the CCWA Engineer a minimum of forty-eight (48) hours prior to start of testing process to schedule inspection of water distribution system testing.

9.02 Hydrostatic

A. Water distribution piping shall be subjected to a hydrostatic pressure test.

B. Pipe shall be flushed free of dirt and debris.

C. A curb stop or fire hydrant shall be installed at the high point of elevation in the pipe line system to release air.

D. Water pipe shall be filled with potable water to a minimum pressure of 150 psi or 50 psi above static pressure, which ever is greater. The static pressure shall be determined by the CCWA Engineer. The CCWA Engineer may require a higher pressure test if deemed necessary.

E. Pressure shall be maintained, without leakage, for a minimum period of two (2) hours, longer testing periods may be required. CCWA may monitor and record hydrostatic pressure test.

F. Test shall be considered acceptable when the required pressure is maintained for the required testing period.

G. If leaks are detected, the Utility Contractor shall locate and repair all leaks and retest the water distribution system. Longer testing periods may be required during retesting of the water distribution system.

This sheet intentionally left blank.

SECTION 10: DISINFECTION

10.01 General

A. All newly installed water distribution piping and piping affected during construction shall be disinfected in accordance with AWWA C651 and Georgia EPD requirements.

B. The Utility Contractor is responsible for proper disinfection procedures and supplying an appropriate chlorine solution to complete disinfection of the water distribution system.

C. No water piping system shall be placed in service until written approval is received from the CCWA Engineer.

D. The Utility Contractor shall be responsible for preventing soil erosion associated with disinfecting procedures.

E. Notify the CCWA Engineer a minimum of forty-eight (48) hours prior to start of disinfection process to schedule inspection of water distribution system disinfection.

F. Certified laboratories must meet the requirements as stated in Division I, Section 7.06.

10.02 Initial Flushing

A. Prior to disinfection, the Utility Contractor shall flush piping system with sufficient water to create a minimum velocity in the pipe of 2.5 ft/s.

B. Piping shall be flushed until water sampled from the piping is free of dirt and flowing clear.

C. All piping and components associated with service connections shall be thoroughly flushed with fresh potable water prior to installation.

10.03 Chlorination

A. The Utility Contractor shall introduce a chlorine solution (Sodium Hypochlorite based) having a concentration sufficient to disinfect the water system. The minimum chlorine concentration shall be in compliance with AWWA C651. Disinfection of the water system shall be achieved using the liquid continuous feed method.

B. Upon introducing chlorine solution, all valves associated with piping system shall be fully operated to ensure complete disinfection.

C. The entire piping system shall have a minimum 10 mg/l chlorine residual after a 24-hour retention period.

D. Disinfection of piping system shall be repeated until the minimum chlorine residual is obtained.

E. All piping and components associated with service connections shall be thoroughly flushed and disinfected with a sufficient chlorine solution.

F. The initial chlorine concentration and residual chlorine concentration after the 24-hour retention period shall be verified by the CCWA or other representative approved by the CCWA . Multiple samples shall be taken to ensure exposure of heavily chlorinated water to entire water system. A copy of the test results must be sent directly to the CCWA if other approved representative is used.

10.04 Final Flushing

A. Final flushing shall be done in accordance with AWWA C651.

B. After chlorination is complete, the Utility Contractor shall flush the piping system, while neutralizing the heavily chlorinated water, until the chlorine residual in water of the piping system is equal to the chlorine residual in the CCWA water distribution system.

C. After chlorination is complete, all piping and components associated with service connections shall be thoroughly flushed with fresh potable water.

D. The Utility Contractor is responsible for neutralizing the heavily chlorinated water used for sterilization and to ensure discharge of water does not harm the environment.

10.05 Bacteria Testing

A. After final flushing, water samples shall be taken by the CCWA or other CCWA approved representative and analyzed by a certified laboratory for bacteria in the water sample.

B. Minimum number of bacteria testing sample points shall be determined by the following:

1. Minimum of one (1) sample per 1,200 LF of water main.
2. One (1) sample at each end of water main.
3. Minimum of one (1) sample per each water main branch.
4. As directed by the CCWA Engineer.

C. At least 24 hours after first set of bacteria tests are taken, a second set of samples shall be taken by the CCWA or other CCWA approved representative and analyzed by the certified laboratory for bacteria in the water sample.

D. A copy of all test results must be sent directly to the CCWA from the certified laboratory stating results of the bacteria testing.

E. If the initial disinfection fails to produce satisfactory bacteriological results, the new main may be re-flushed and re-sampled. If these samples also fail to produce acceptable results, the main shall be re-chlorinated and retested until satisfactory results are obtained.

This sheet intentionally left blank.

APPENDIX A

WATER DISTRIBUTION ADDITION SUBMITTAL FORM

General Information

1. Project name:_____
2. Developer's name:_____
3. Design Engineer or Surveyor:_____
   State of Georgia License No.:_____ Expiration Date:_____
4. Will development be constructed in phases? Yes____ No____
   If yes. Current Phase:_____ Total Phases in Development:_____
5. Size of Development (acres): Current Phase:_____ Ultimate:_____
6. Type of Development (Include percentage of total development):
   Residential:_____ Commercial:_____ Industrial:_____ Other:_____
   (If other, explain)_____
7. Estimated population to be served:_____ Density (pop./acre):_____
8. Proposed number of lots/households:_____
9. Wastewater system serving development:
   Individual Septic Tanks _____ Central Sewer _____ Decentralized Sewer_____
   If central sewer, provide name of municipal system that will receive development's wastewater flow:_____
10. Other comments:_____
   _____

Water System Information

1. Design water usage (gallons/day): Average:_____ Peak:_____
2. List proposed pipe diameters, pipe material and pipe lengths:
   _____
   _____
3. Attach copy of fire flow test sheet provided by Carroll County Fire and Rescue.
4. Highest elevation in development (msl):_____
   Lowest elevation in development (msl):_____
   Elevation of tie-in to CCWA water system (msl):_____
5. Other comments:_____
   _____

This sheet intentionally left blank.

APPENDIX B

MAINTENANCE BOND

KNOW ALL MEN BY THESE PRESENTS:

That _____
as principal, hereinafter called Contractor, and

_____
as Surety, hereinafter called Surety, are firmly bound unto
_____CARROLL COUNTY WATER AUTHORITY_____
as Obligee, hereinafter called Owner, in the penal sum of

_____
($_____), for the payment whereof the Contractor and Surety bind themselves, their heirs, executors, administrators, successors, and assigns, jointly and severally, firmly by these presents.

WHEREAS, Contractor has installed a water system and other improvements known as

_____
in accordance with plans and specifications presented to the Owner (the "Improvements").

NOW, THEREFORE, the condition of this obligation is such that, if Contractor shall remedy all defects due to faulty materials or workmanship, and pay for such damage to other work resulting therefrom, which shall appear with a period of __1(One)_____ years from the date of acceptance of the Improvements by Owner; then this obligation to be void, otherwise to remain in full force and effect.

The date of acceptance of the Improvements is _____,

PROVIDED, HOWEVER that Owner shall give Contractor and Surety notice of observed defects with reasonable promptness.

SIGNED and sealed this _____ day of _____, _____.

In the presence of:

_____	_____
Witness	Principal
	_____(Seal)
	By:_____
	Title:_____
_____	_____
Witness	Surety
	_____(Seal)
	By:_____
	Title:_____

This sheet intentionally left blank.

APPENDIX C

WAIVER AND SUBORDINATION OF LIEN

STATE OF GEORGIA
COUNTY OF CARROLL

WHEREAS, the undersigned, _____, (hereinafter referred to as the "Undersigned") has furnished or has contracted to furnish labor, services and/or materials (hereinafter collectively referred to as the "Work") in connection with the improvements of certain real property located in _____County, Georgia, (said real property being more particularly described in **Exhibit "A"** attached hereto and by reference made a part hereof, and being hereinafter referred to as the "Property") which property is owned by **CARROLL COUNTY WATER AUTHORITY**; and

NOW, THEREFORE, for and in consideration of the Authority's acceptance of the water system constructed on the Property, and other good and valuable consideration, the receipt and sufficiency whereof are hereby acknowledged, and in order to induce the acceptance by the Authority of the abovementioned improvements, the Undersigned does hereby:

(a) Waive and release any lien or right to lien to the Undersigned on or against said Property on account of Work furnished by the Undersigned for the improvements of said Property on or before the date hereof; and

(b) In the event of lender financing, subordinate any lien or right to lien of the Undersigned on or against said Property to the lien and title of any lender in and to said Property (as granted by lender by the documents evidencing and securing the abovementioned loan) on account of Work furnished by the Undersigned for the improvement of said Property after the date hereof; and

(c) Warrant and represent that any and all parties who have supplied Work to the Undersigned for the improvements of said Property have been paid in full and all amounts accrued by virtue of such Work though and including the date hereof; and

(d) Warrant and represent that the Undersigned (or the individual executing this instrument on behalf of the Undersigned) has personal knowledge of the matters herein stated, and is authorized and fully qualified to execute this instrument as or on behalf of the Undersigned; and

(e) Covenant and agree that this instrument is made in consideration of the payment of the aforesaid sums to the Undersigned, and pursuant to the statutes of the State of Georgia with respect to the liens of laborers and materialmen.

WITNESS the hand and seal of the Undersigned, this the _____day of _____, 20____.

Undersigned:

_____(Seal)
Name:
Title

Signed, sealed, sworn to and
subscribed before the undersigned
unofficial witness and notary public

_____
Unofficial Witness

_____
Notary Public
My Commission Expires

This sheet intentionally left blank.

Appendix D

Water Plan Guidelines

As a minimum the following information should be used in preparing and shown on water distribution system construction plan submittals:

1. Project name and Professional Engineer or Registered Land Surveyor stamp on each sheet with their signature across stamp.

2. Developer/Owner name, address and telephone number.

3. Design Engineer/Surveyor name, address and telephone number.

4. Detailed project site location map with street names and North arrow.

5. Site plan showing streets, street names, lot layout (if subdivision) or building locations (if multi-family, commercial or industrial), land lots and district, north arrow, and water system layout.

6. Detailed plans of the location and the construction of water mains, valves, fire hydrants and appurtenances.

7. Show existing and proposed ground elevations contours (2 foot intervals) in gray scale.

8. Existing water main route and sizes surrounding project.

9. Existing fire hydrants and valves surrounding project.

10. Proposed water main route, including material and size of mains.

11. Proposed water main tie-in location and details.

12. Show all proposed service connections and water meters, including size of service.

13. Water mains, valves, fire hydrants, meters and other appurtenances shall be located and shown as required by the specifications.

14. Thrust blocks at all bends and tees.

15. Show all utilities in the project area that are a potential for conflict with the water system.

16. Show all easements, sized as required by the specifications.

17. Show fire flow information on the plans as provided by the local fire department.

18. Proposed bore locations indicating casing size, material and length.

19. Show all appropriate CCWA Construction Details.

20. Construction plans shall be drawn at an appropriate engineering scale (min. 1" = 100') that shows details as required for proper review of plans.

21. Maximum sheet size: 24 inches x 36 inches (22 inches x 34 inches preferred)

<u>The following notes should appear on the construction plans:</u>

1. All materials and work shall be in accordance with CCWA Standards and Specifications.
2. Prior to the commencement of a project, the Developer and Utility Contractor shall attend a pre-construction conference.
3. CCWA Project Inspectors shall be notified a minimum of forty-eight (48) hours prior to the start of water system installation.
4. CCWA Project Inspectors shall be notified a minimum of twenty-four (24) hours prior to the delivery of any materials.
5. CCWA Project Inspectors shall be notified a minimum of forty-eight (48) hours prior to the disruption of water service. The Utility Contractor shall notify the affected public a minimum of twenty-four (24) hours prior to the disruption of water service. No connections are to be made to water mains after 2 p.m.
6. All fire hydrants shall have an isolation valve between the fire hydrant and water main.
7. All water mains shall be installed five (5) feet behind the back of curb or edge of pavement or as directed by the CCWA Engineer.
8. Water main piping shall not be installed until curb and gutter is installed.
9. All water lines shall have four (4) feet of cover unless directed otherwise by the CCWA Engineer.
10. Water mains larger than two (2) inches in diameter shall be ductile iron.
11. Two (2) inch PVC water mains shall be SDR 13.5, 315 psi.
12. Developer shall install all water services up to and including meter boxes.
13. All services lines shall be copper tubing and sized in accordance with CCWA specifications.
14. All long side water services shall be encased in two (2) inch PVC pipe.
15. All water mains crossing roads or drains shall be encased in steel casing in accordance with CCWA specifications.
16. All carrier pipes within casing shall use either restrained joint ductile iron pipe and/or utilize prefabricated spacers.
17. All ends of casing shall be sealed per CCWA specifications.
18. All service boxes and fire hydrants shall be set at property lines.
19. All service boxes shall be set ten (10) feet from the back of curb within residential subdivision developments.

20. No valve or fittings shall be installed under pavement, including curb and gutter.
21. Fourteen (14) gauge insulated wire shall be installed with water main for tracer wire. Use wire nuts to make all connections.
22. A chlorination tap shall be made within ten (10) feet of the connection point to the existing water system.

This sheet intentionally left blank.

Water Main Location

(Roadway with curb and gutters)

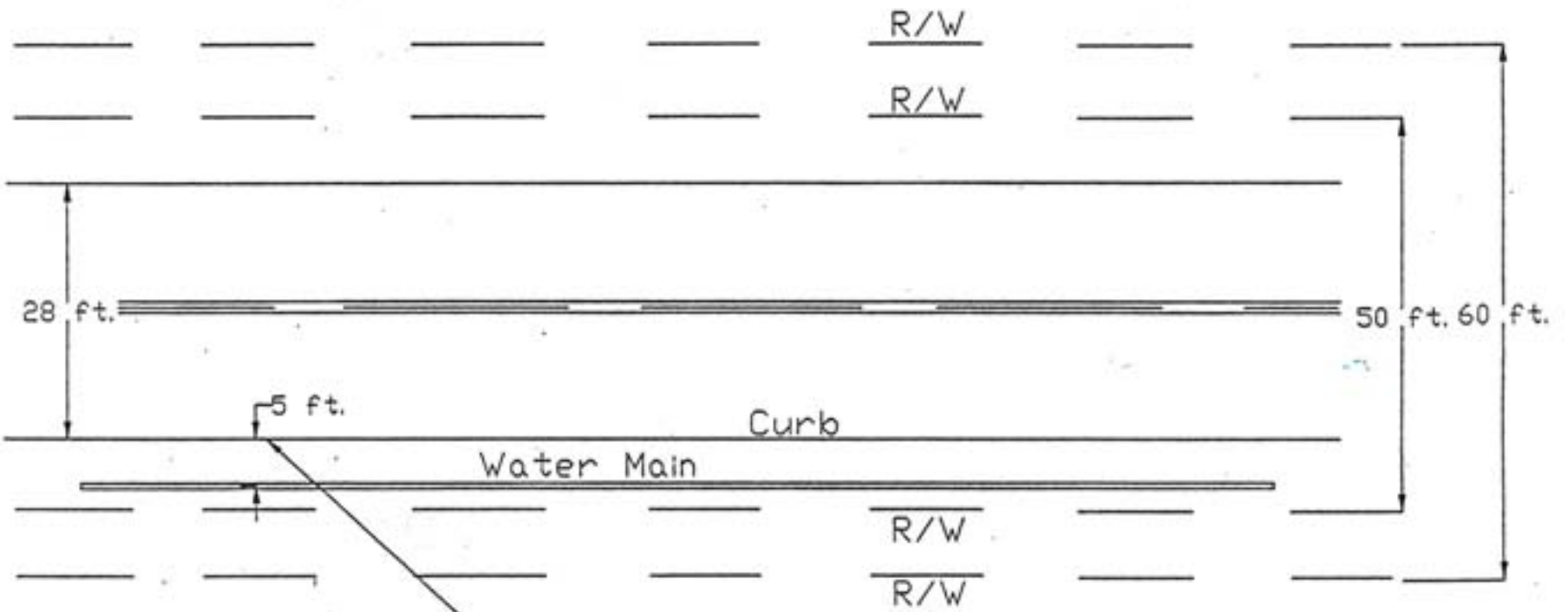

All measurements for main and services measure from back of curb

NOTE: for 50 ft. or 60 ft. R/W install main 5 ft. from back of curb

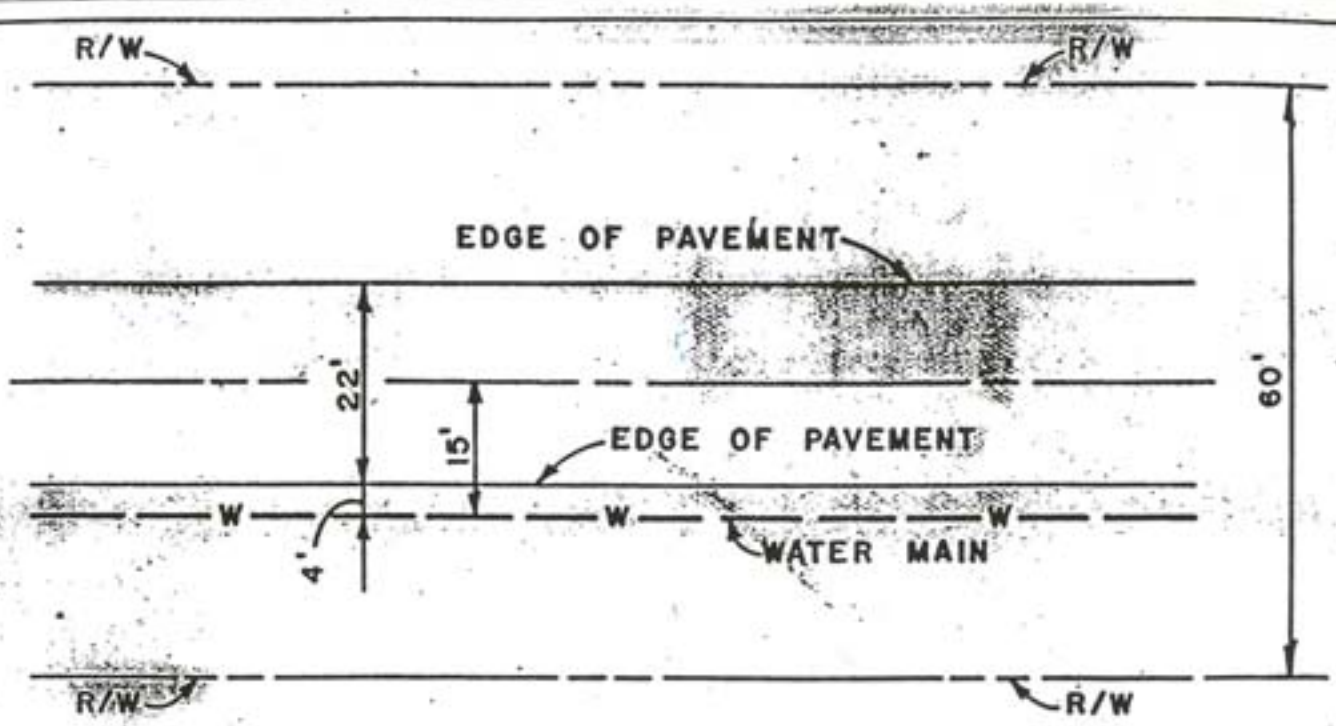

PLAN

1" = 20'—0"

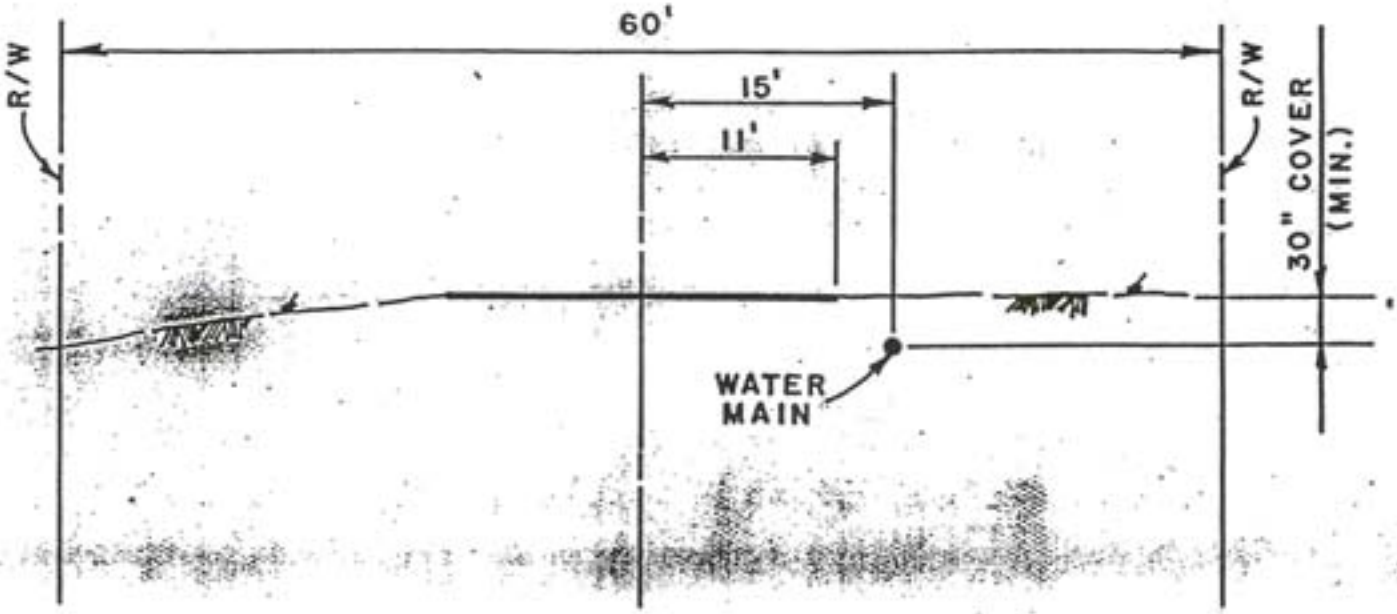

SECTION

1" = 10'—0"

WATER MAIN LOCATION

(ROADWAY WITHOUT CURB AND GUTTER)

CARROLL COUNTY WATER AUTHORITY

W-2

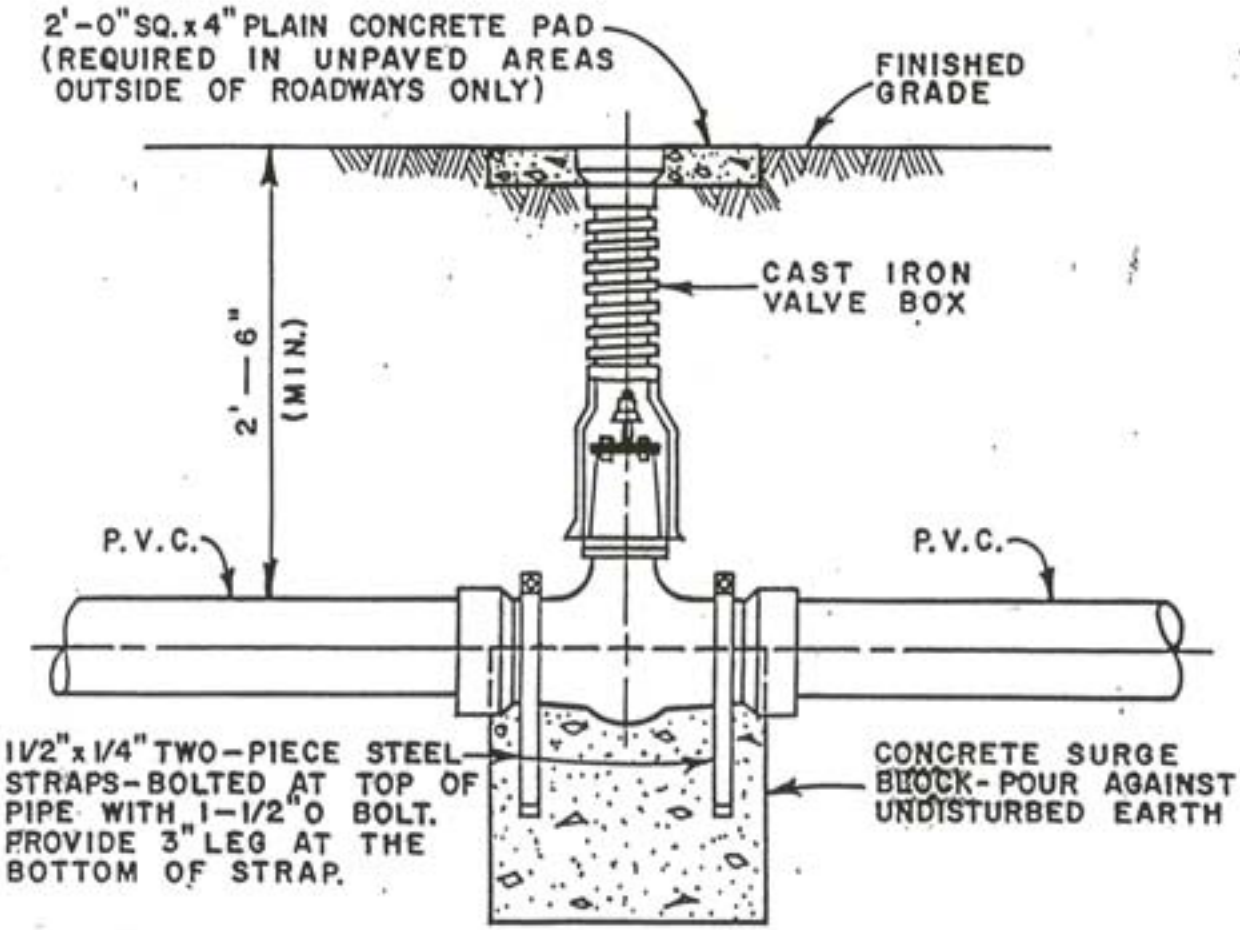

TYPICAL GATE VALVE INSTALLATION DETAIL

N.T.S.

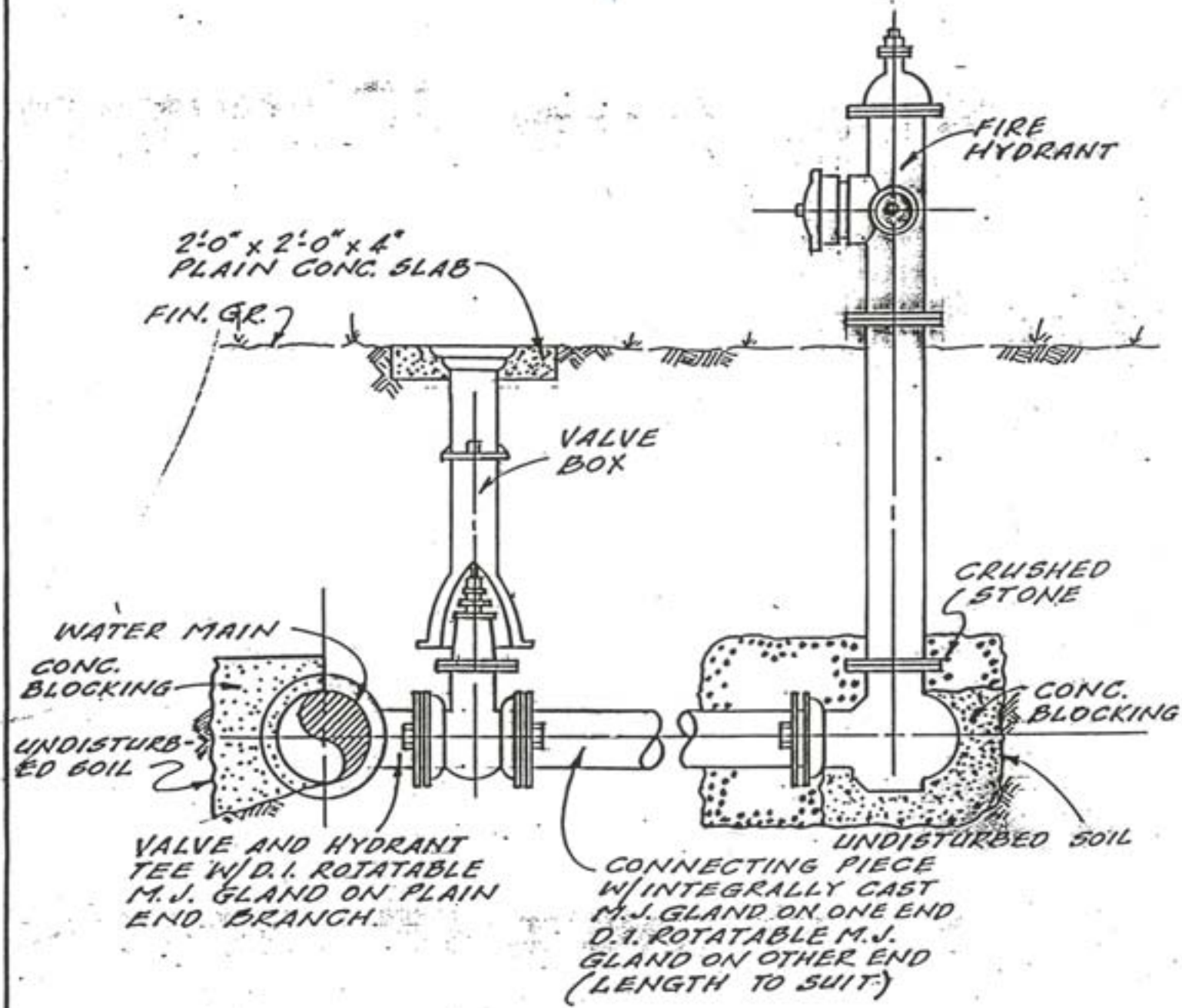

FIRE HYDRANT DETAIL

Flush Valve Assembly

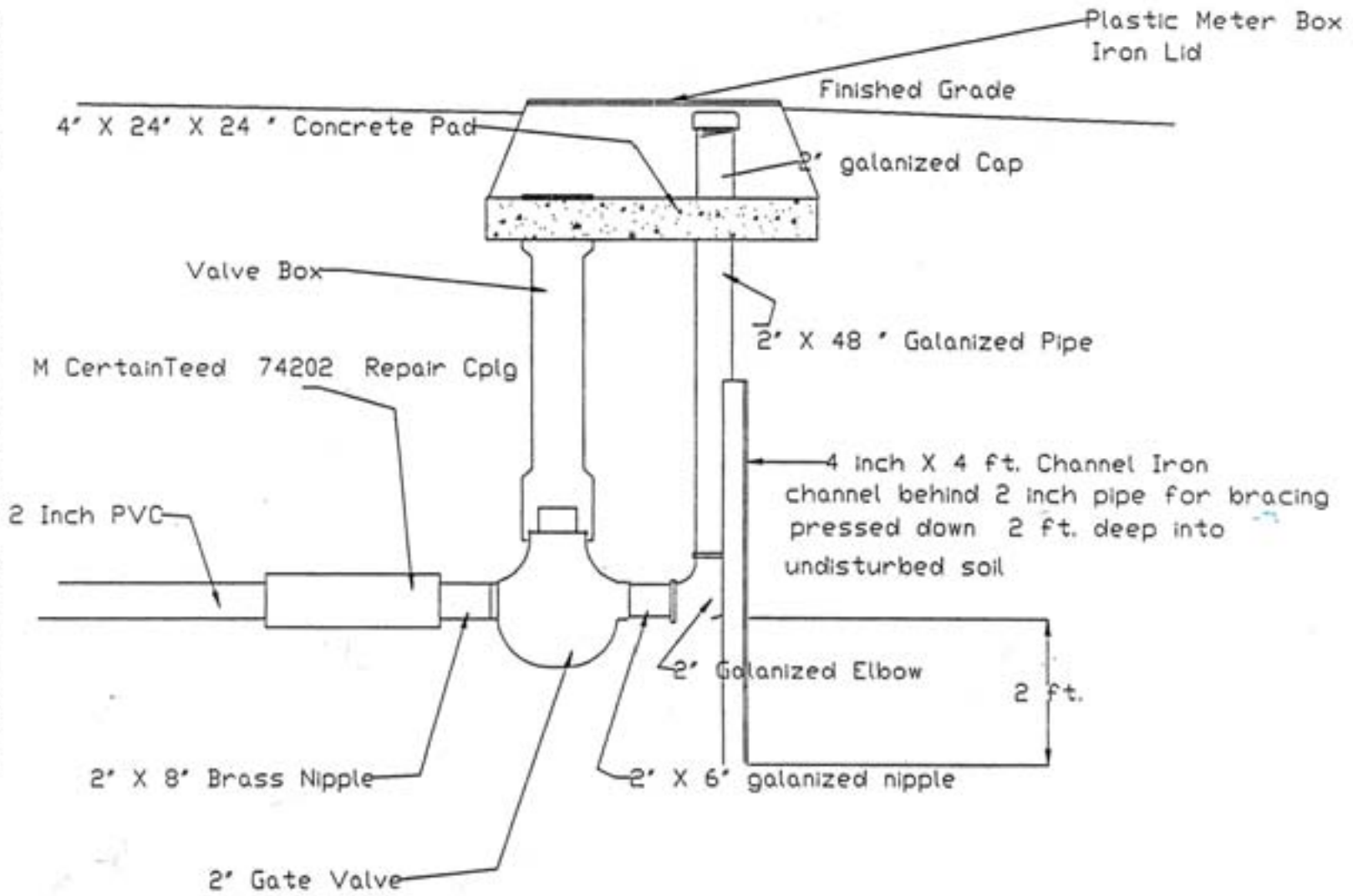

Carroll County Water Authority

W-5

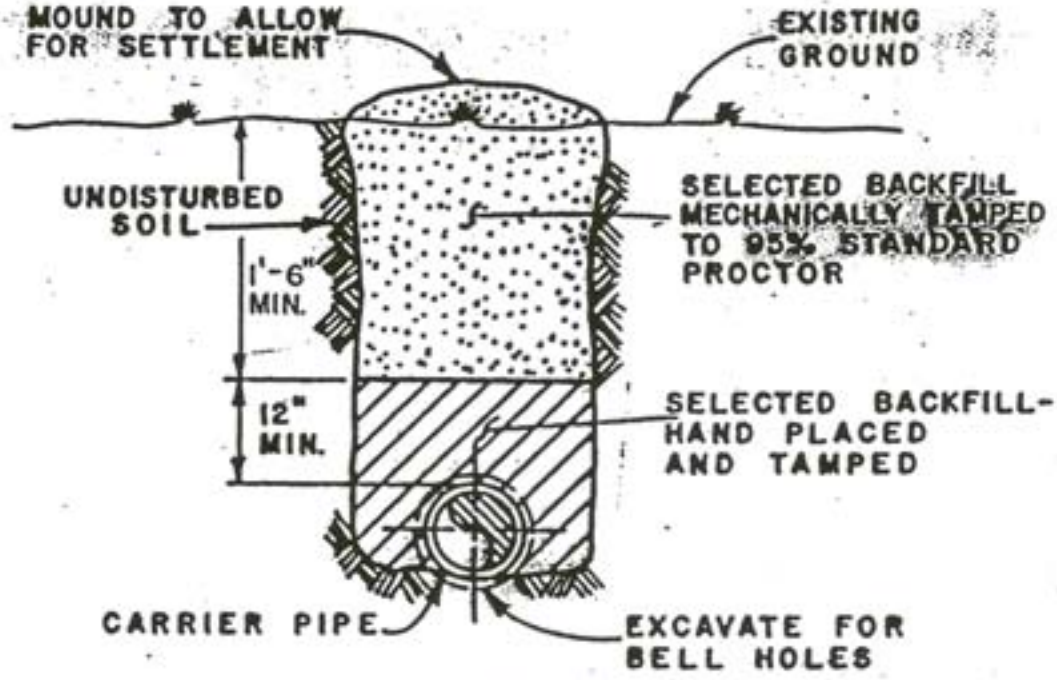

TYPICAL BEDDING DETAIL

N.T.S.

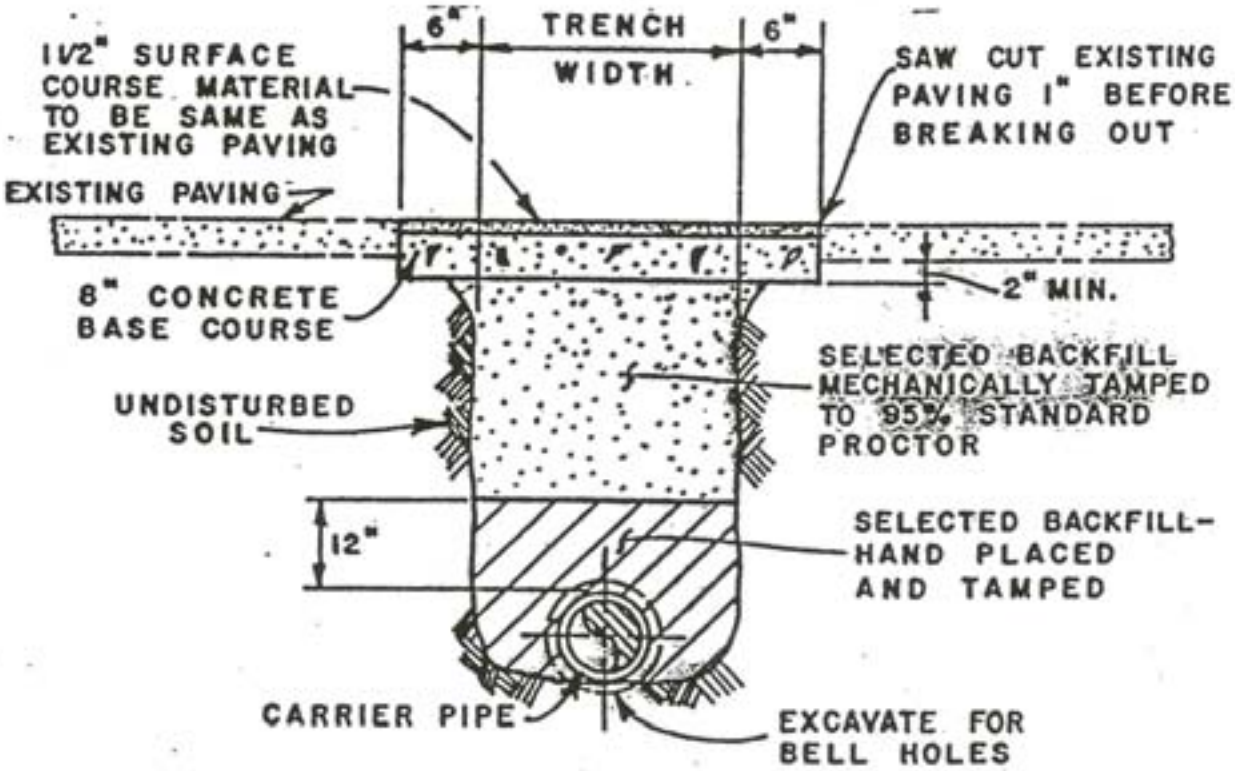

TYPICAL PAVEMENT PATCH

N.T.S.

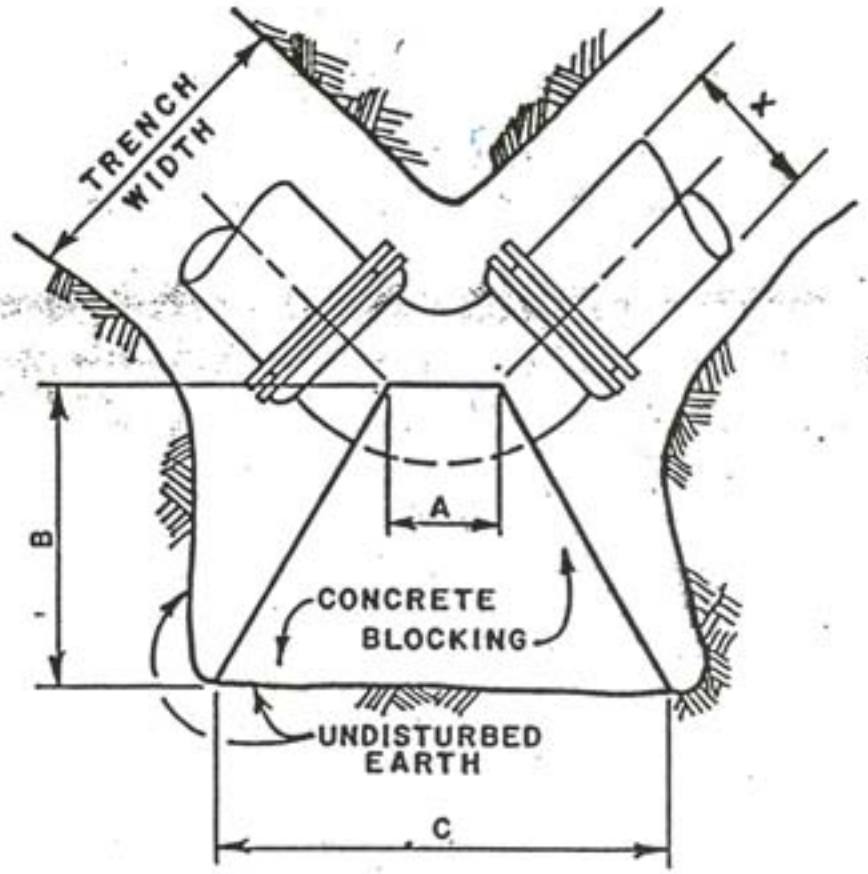

BEND

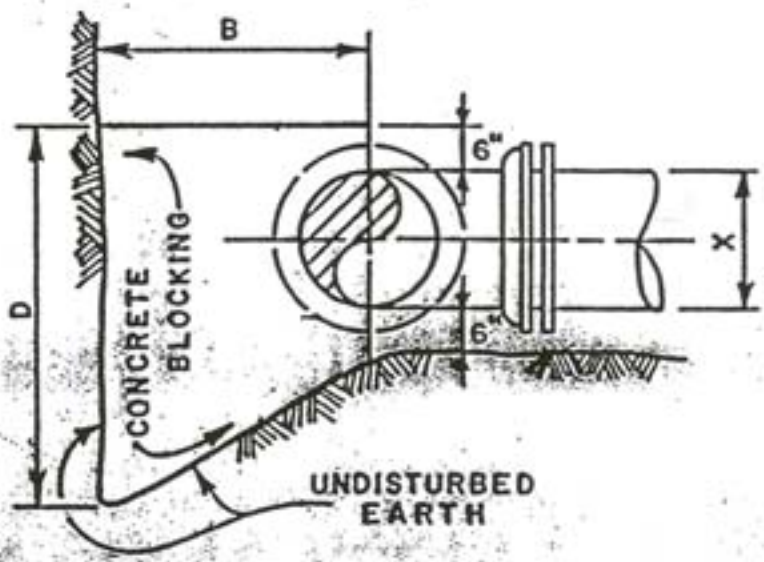

SECTION

CONCRETE BLOCKING DIMENSIONS

X	A	B	C	D
90° BENDS				
12"	1'—2"	2'—7"	4'—3"	3'—0"
10"	1'—0"	2'—0"	3'—2"	2'—10"
8"	8"	2'—5"	2'—2"	2'—8"
6"	6"	2'—4"	1'—4"	2'—6"
45° BENDS				
12"	6"	2'—6"	2'—4"	3'—0"
10"	5"	2'—5"	1'—9"	2'—10"
8"	4"	2'—4"	1'—2"	2'—8"
6"	3"	2' 3"	9"	2'—6"
22 1/2° BENDS				
12"	6"	2'—6"	1'—2"	3'—0"
10"	5"	2'—5"	10"	2'—10"
8"	4"	2'—4"	8"	2'—8"
6"	3"	2'—3"	4"	2'—6"
11 1/4° BENDS				
12"	6"	2'—6"	8"	3'—0"
10"	5"	2'—5"	5"	2'—10"
8"	4"	2'—4"	4"	2'—8"
6"	3"	2'—3"	3"	2'—6"
PLUGS				
12"	1'—0"	2'—6"	3'—10"	3'—0"
10"	1'—0"	2'—5"	2'—10"	2'—10"
8"	1'—0"	2'—4"	1'—10"	2'—8"
6"	1'—0"	2'—3"	1'—2"	2'—6"

SOIL PRESSURE AT 2500 PSF
TEST PRESSURE 200 PSI

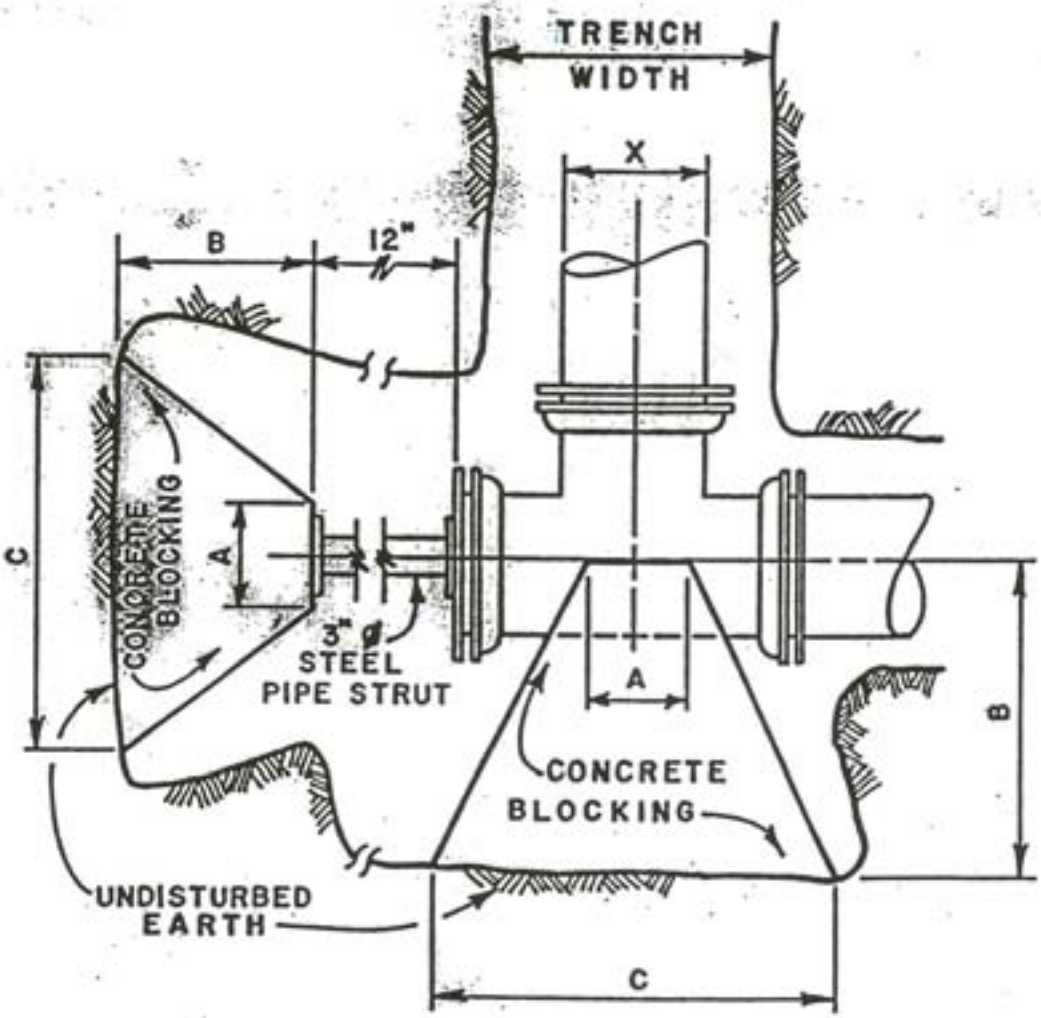
TRENCH
WIDTH
X
B
12"
C
A
CONCRETE
BLOCKING
3" ø
STEEL
PIPE STRUT
A
B
CONCRETE
BLOCKING
UNDISTURBED
EARTH
C

TEE

CONCRETE BLOCKING DIMENSIONS				
X	A	B	C	D
TEES — 12" RUN				
12"	1'—2"	2'—6"	3'—0"	3'—0"
10"	1'—0"	2'—5"	2'—3"	2'—10"
8"	10"	2'—4"	1'—6"	2'—8"
6"	8"	2'—3"	1'—0"	2'—6"
TEES — 10" RUN				
10"	1'—0"	2'—5"	2'—3"	2'—10"
8"	10"	2'—4"	1'—6"	2'—8"
6"	8"	2'—3"	1'—0"	2'—6"
TEES — 8" RUN				
8"	10"	2'—4"	1'—6"	2'—8"
6"	8"	2'—3"	1'—0"	2'—6"
TEES — 6" RUN				
6"	8"	2'—3"	1'—0"	2'—6"

SOIL PRESSURE AT 2500 PSF
TEST PRESSURE 200 PSI

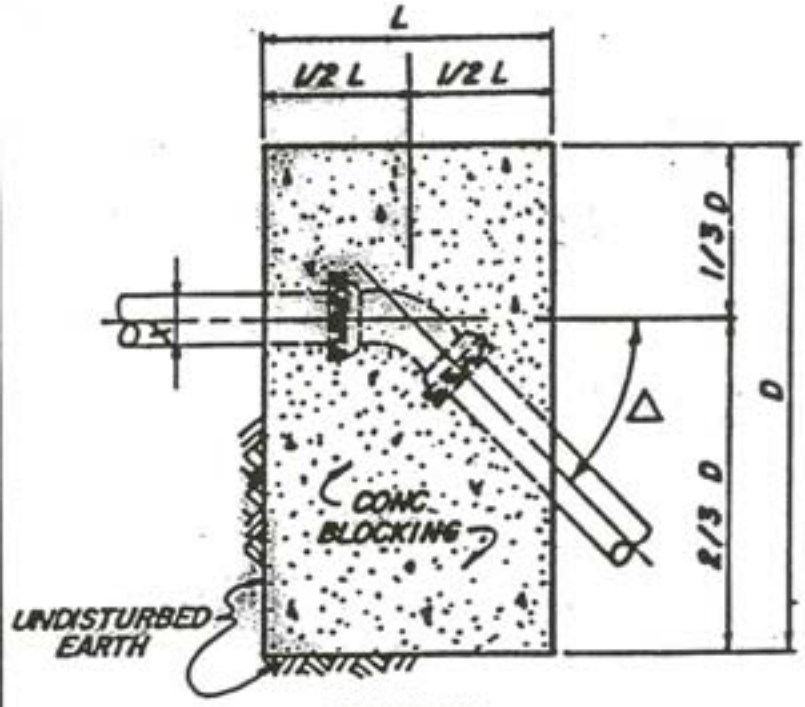

SECTION

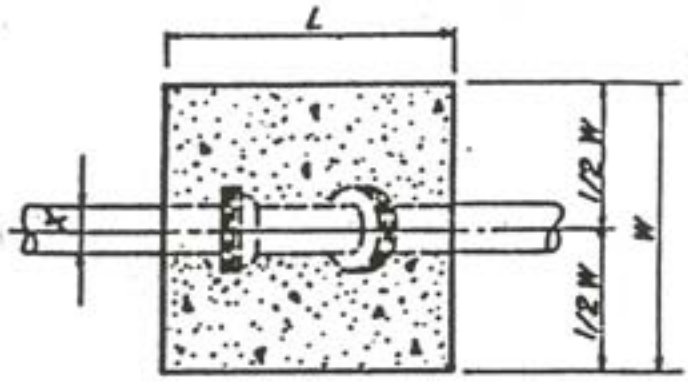

PLAN

DETAILS OF VERTICAL BLOCKING

N.T.S.

CONCRETE BLOCKING DIMENSION				
Δ	X	W	L	D
CLASS 250				
45°	6"	2'-6"	3'-0"	4'-0"
22 1/2°	6"	2'-0"	2'-6"	3'-3"
11 1/4°	6"	1'-9"	2'-0"	2'-6"
CLASS 200				
45°	6"	2'-0"	3'-0"	4'-0"
22 1/2°	6"	2'-0"	2'-3"	3'-0"
11 1/4°	6"	1'-6"	2'-0"	2'-6"
CLASS 160				
45°	6"	2'-0"	2'-6"	3'-9"
22 1/2°	6"	2'-0"	2'-0"	3'-0"
11 1/4°	6"	1'-6"	2'-0"	2'-0"

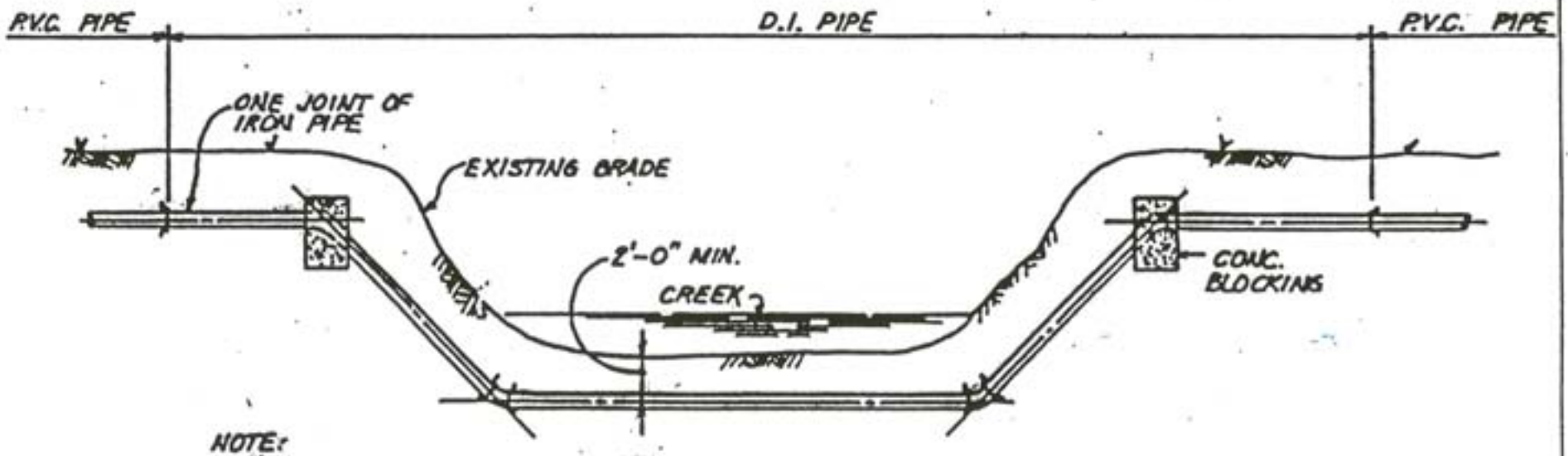

NOTE:
VERTICAL BENDS MAY BE OMITTED PROVIDED THAT THE PIPELINE CAN BE INSTALLED WITHOUT EXCEEDING THE MAXIMUM ALLOWABLE PIPE JOINT DEFLECTION AS RECOMMENDED BY MANUFACTURER. IN SUCH CASES DI PIPE WILL BE REQUIRED UNTIL THE NORMAL COVER CAN BE ATTAINED. LOCATIONS OF D.I. PIPE TO BE DETERMINED BY ENGINEER IN FIELD.
PVC PIPE MAY BE INSTALLED IN STEEL CASING

TYPICAL CREEK CROSSING DETAIL

N-T-S

Sevice Connection

End View

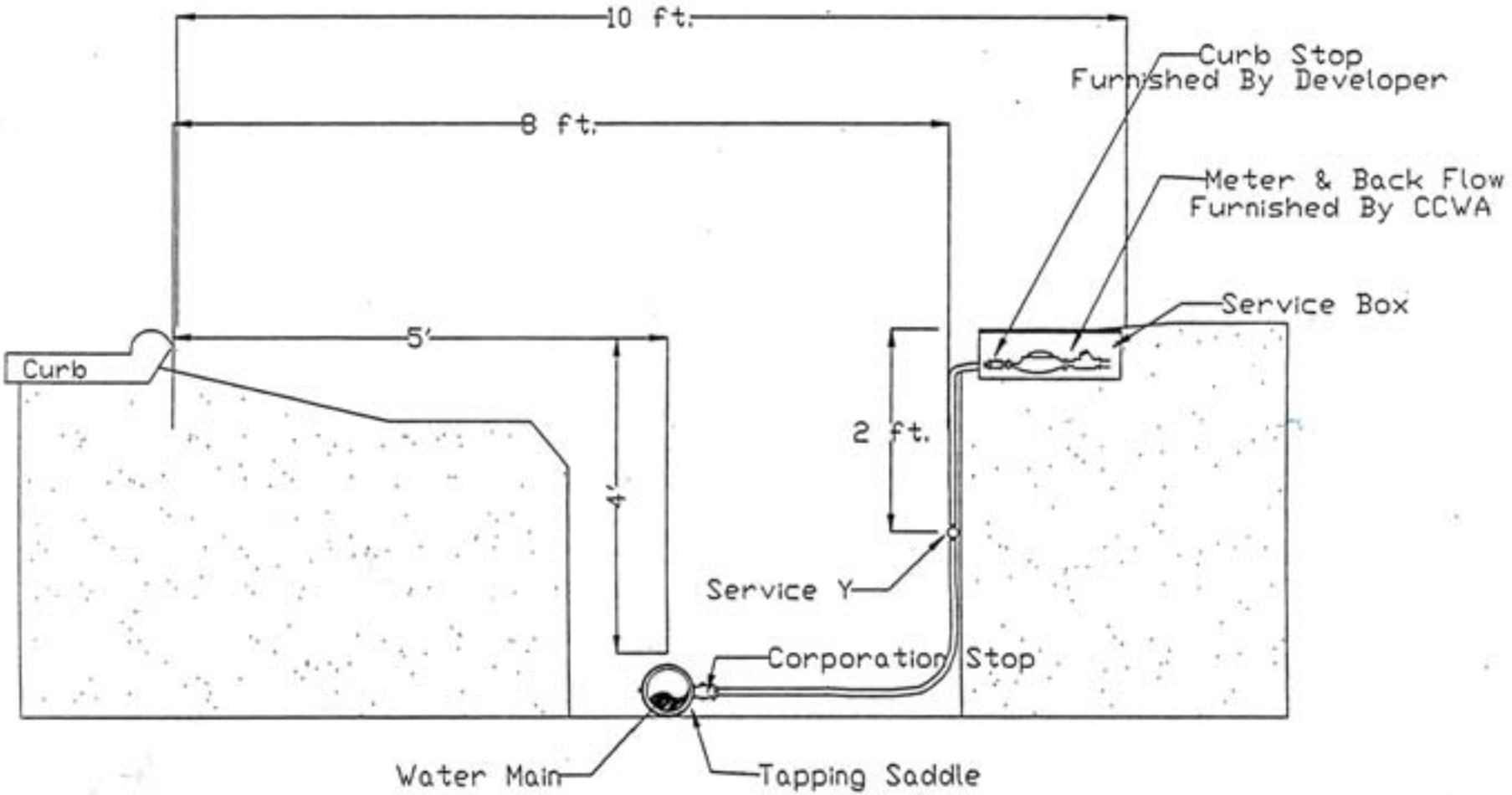

NOTE: services connection by developer
Meter by CCWA

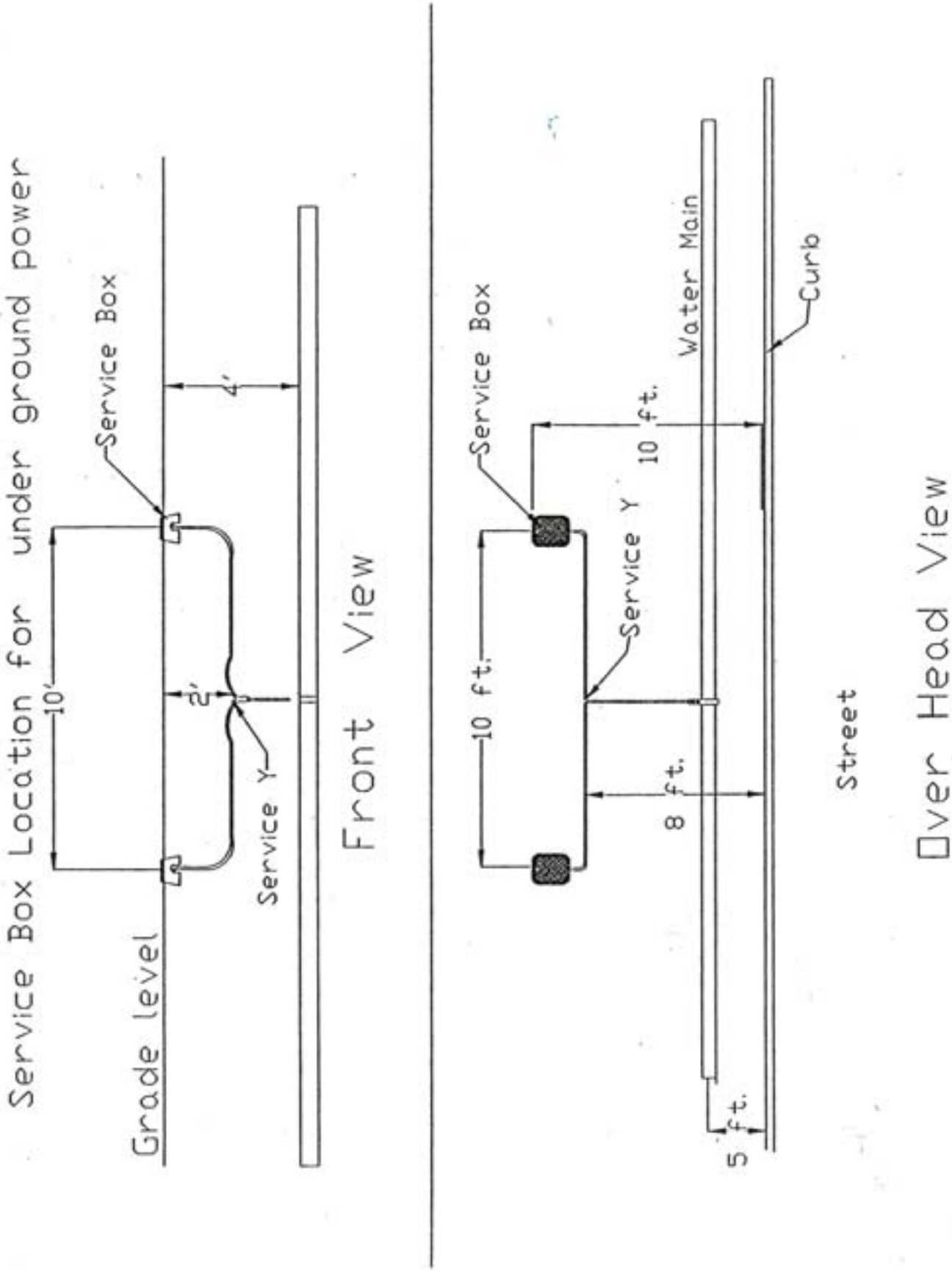

Carroll County Water Authority W-15

Service Box Location for above ground power

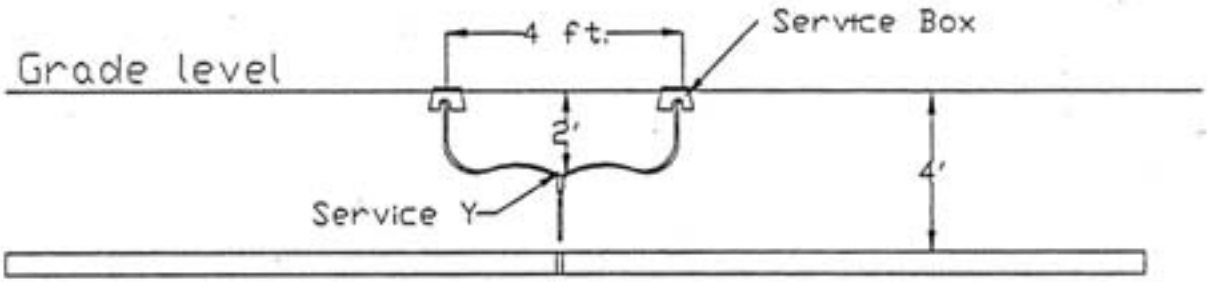

Front View

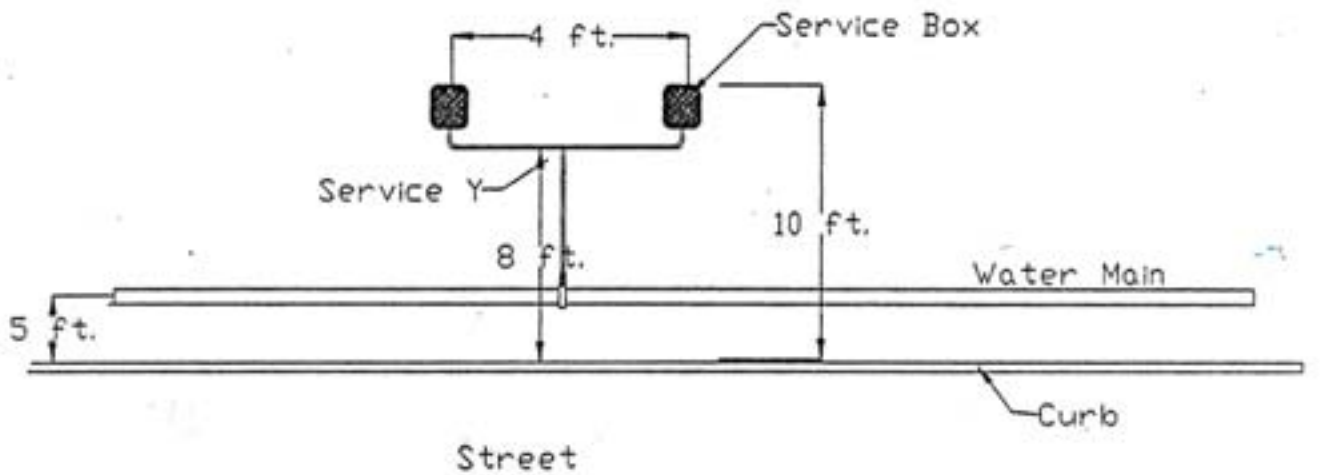

Over Head View

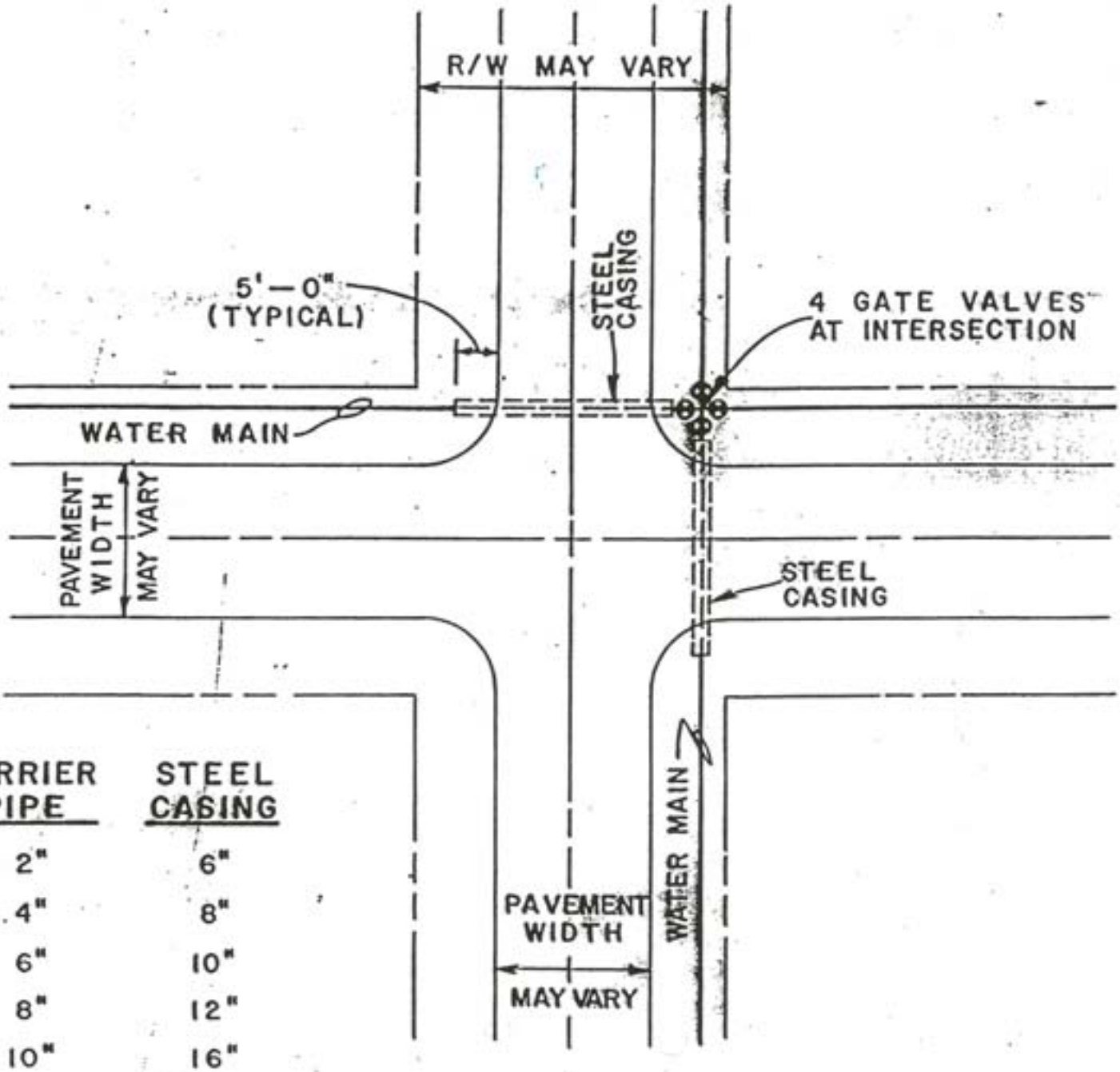

CARRIER PIPE	STEEL CASING
2"	6"
4"	8"
6"	10"
8"	12"
10"	16"
12"	18"

TYPICAL WATER MAIN CROSSING PAVED STREETS

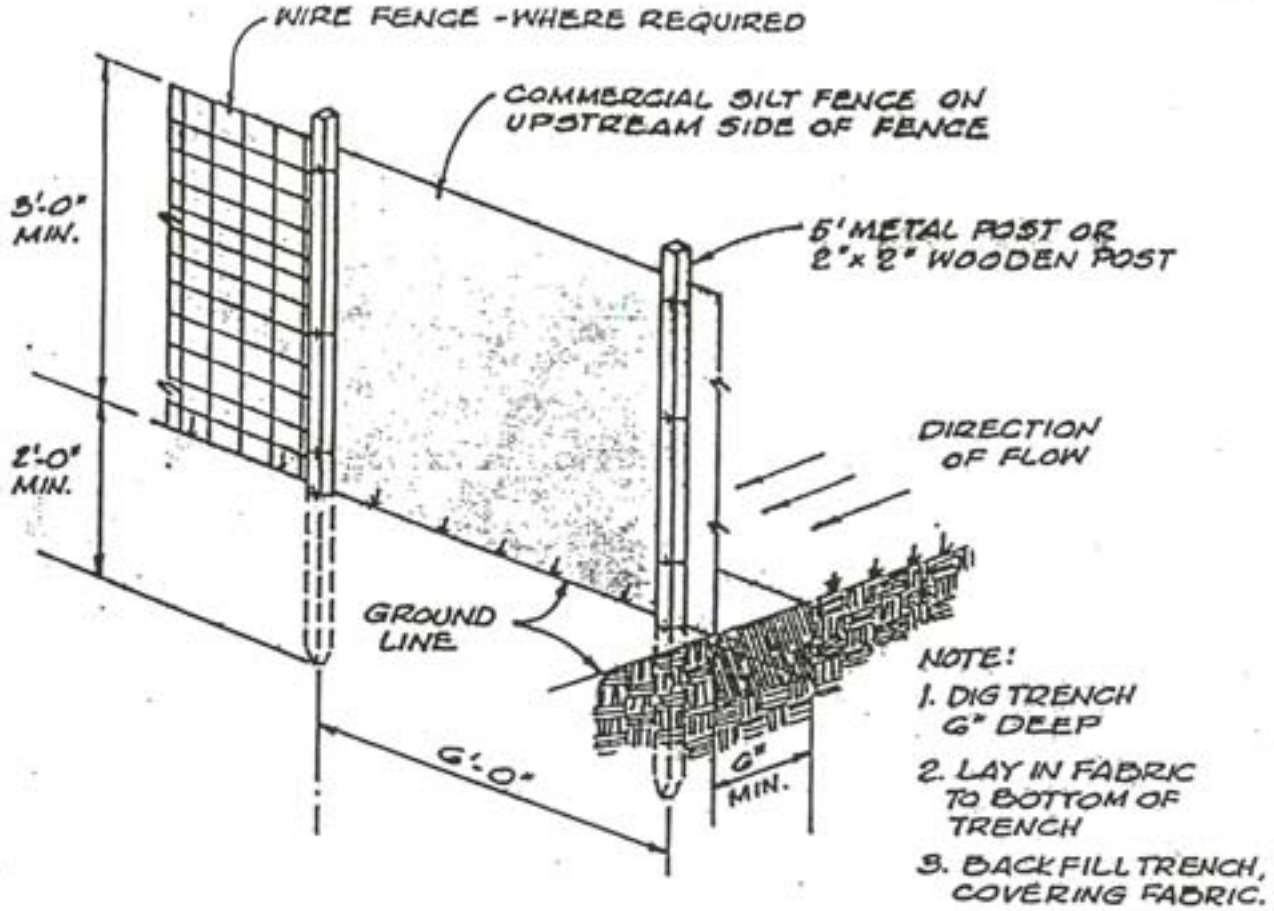

TYPE 1 (Sd1) SILT FENCE DETAIL
PERSPECTIVE N.T.S.

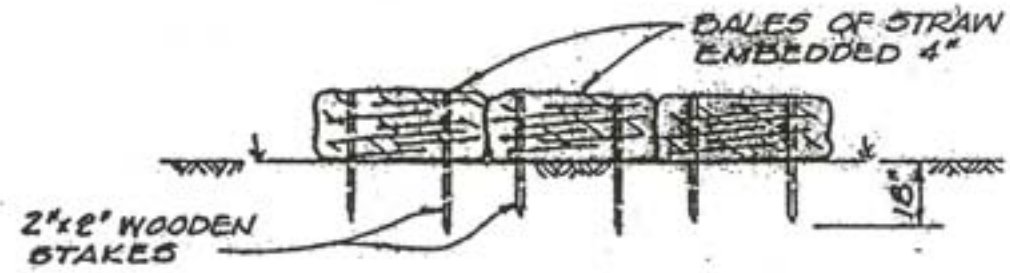

TYPE 2 (Sd1) BALE STAKING DETAIL
N.T.S.

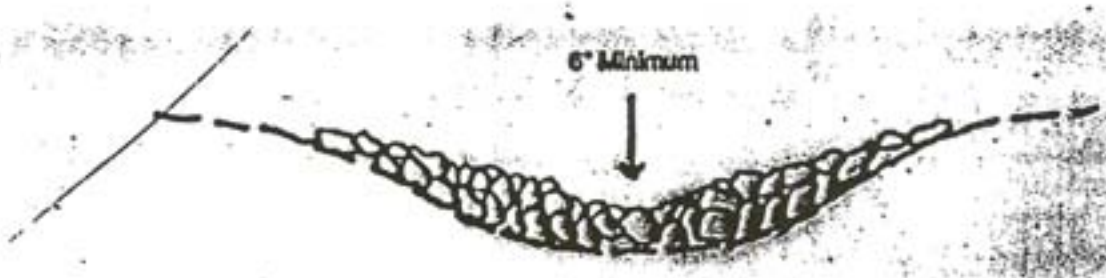

NOTE: Sediment Trap is to be cleaned out when volume becomes half full.

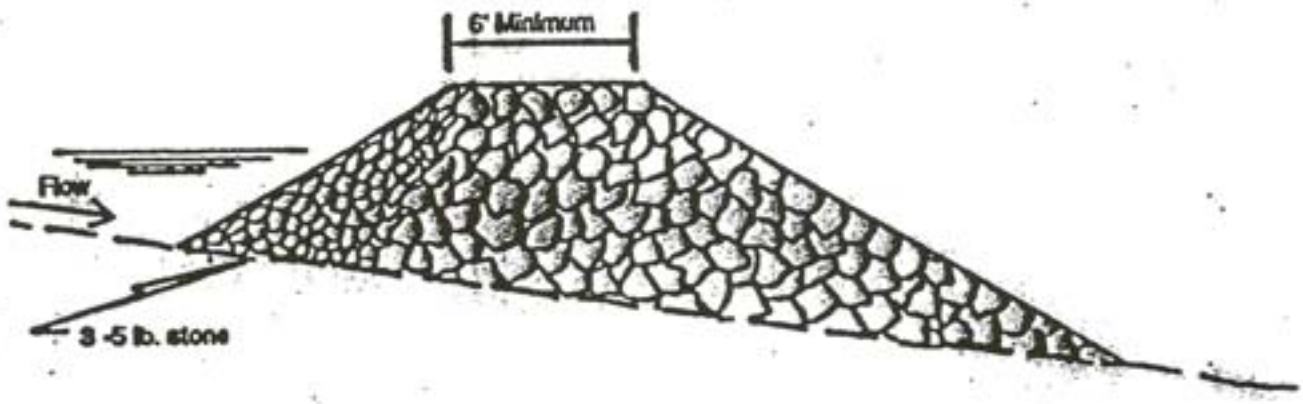

NOTE: Rock size determined according to specifications set forth in Appendix C.

(Rd) ROCK DAM FOR SEDIMENT CONTROL

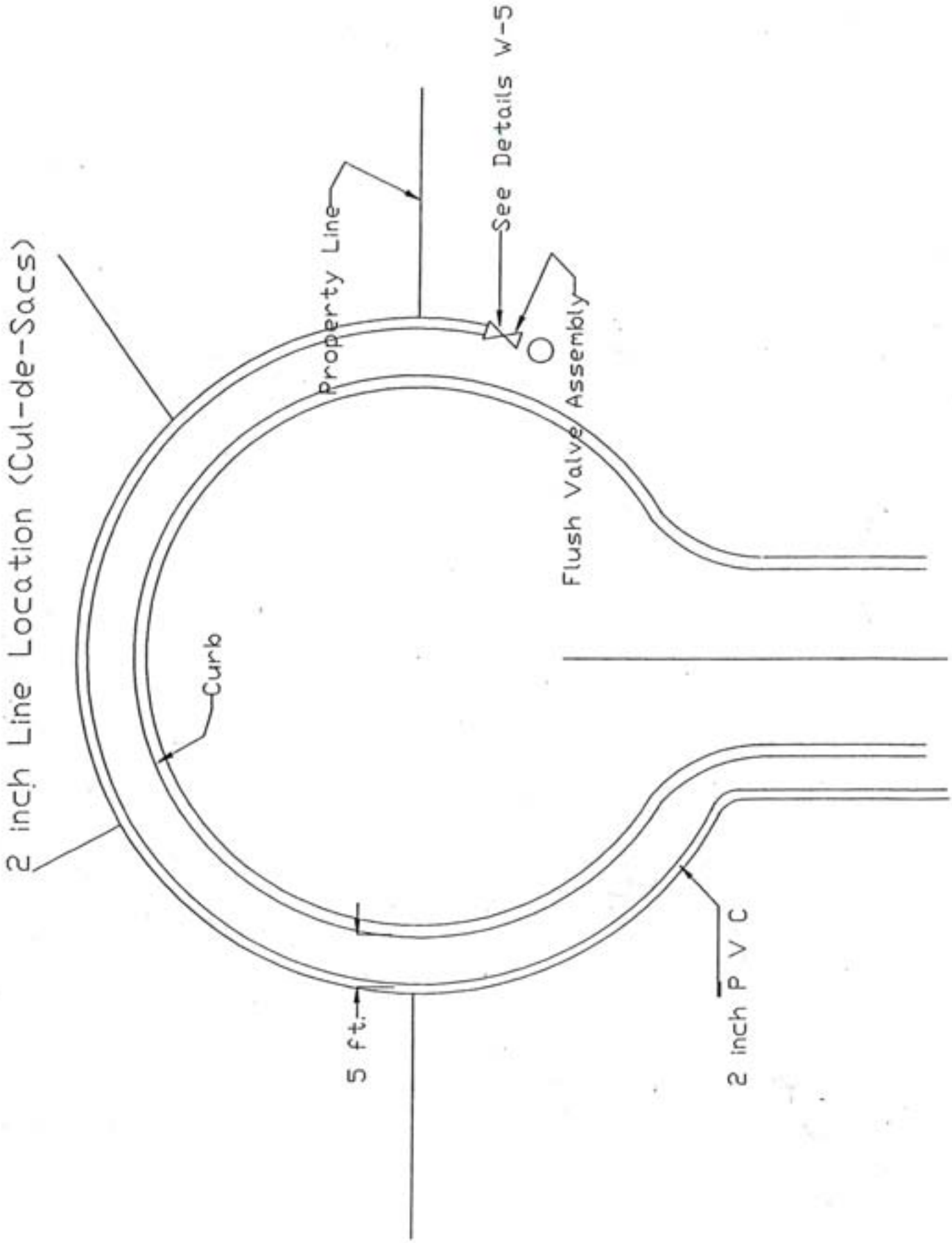

Carroll County Water Authority W-20

Meter Installtion

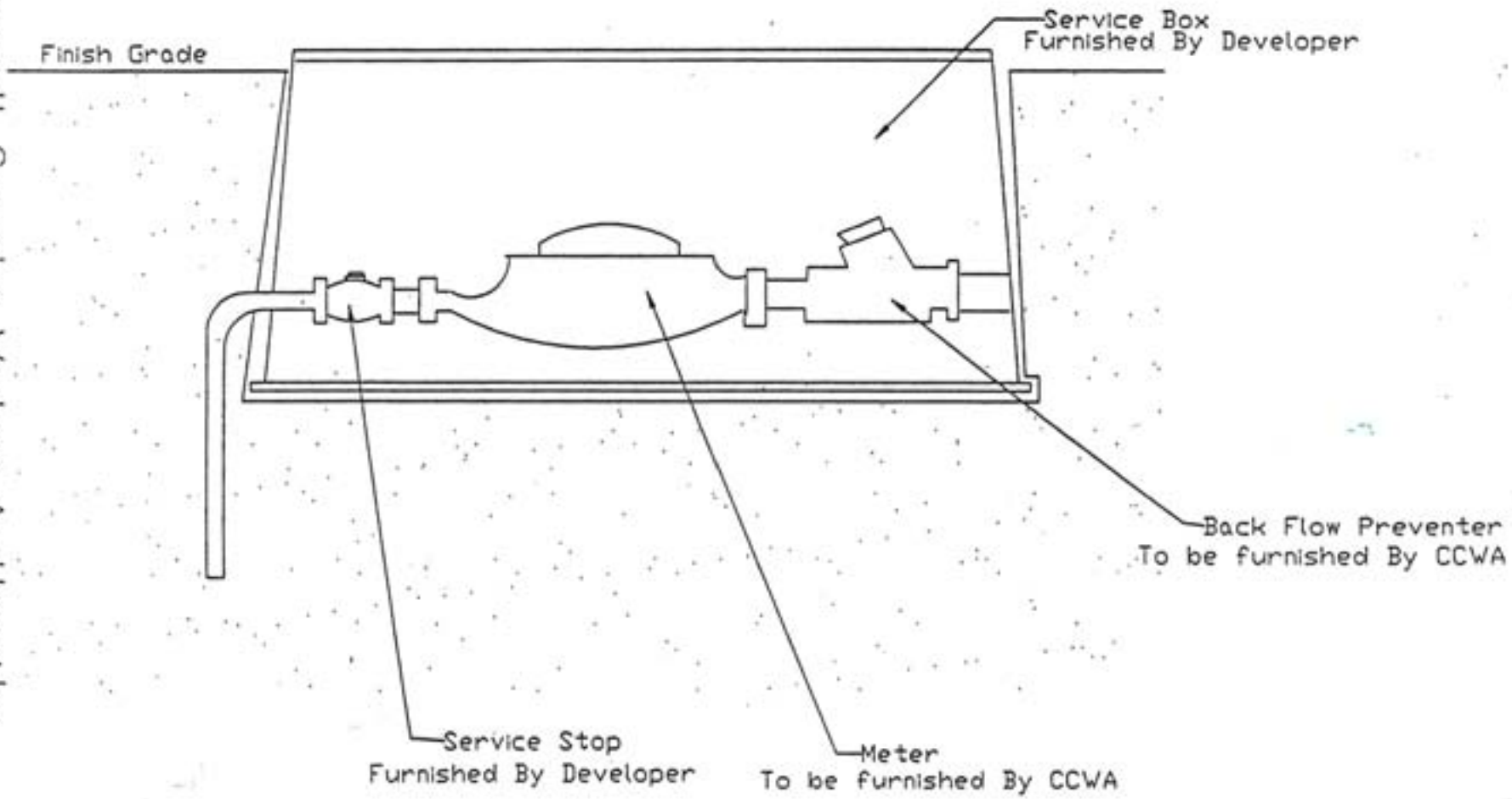

APPENDIX E

POLICY & PROCEDURE EXAMPLES

Baldwin County Water Utilities Ordinance

Baldwin County Water Line Extension Policy

Mebane Specifications

Mebane Cross Connection Ordinance

Mebane Water Shortage Plan

Cobb County Water Waste Policy

Georgia Pretreatment Program Guidance

Chapter 58 - UTILITIES

Article I – IN GENERAL

Sec. 58-11. Provisions saved from repeal.

Sections 22-10—22-91, including the ordinance of February 4, 1975, as amended January 1, 1977, and the resolution of June 14, 1973, of the Baldwin County Code dated June 1979 on the subject of water sewerage and drainage are not repealed and shall continue in full force and effect pending a revision of the subject matter by the county.

Secs. 58-12--58-20. - Reserved.

Article II – WATER

Sec. 58-21. – Definitions.

Unless the context specifically indicates otherwise, the following terms and phrases, as used in this Ordinance, shall have the meanings hereinafter designated:

Application: A form used in making a request

Baldwin County: The members of the Baldwin County Board of Commissioners and its agents and employees.

Board: The governing body of the Baldwin County Board of Commissioners.

Commercial development: Any commercial use building or group of commercial use buildings in a single development, or any single commercial use building that may include more than one tenant. Commercial uses include, but are not limited to, a mix of business, professional and retail activities.

Construction of Water Lines - the placing of water lines and the burial thereof in connection with the original line extension project as determined by Baldwin County

Consumer: Any person, corporation, company, partnership, organization (whether for profit or not), association, venture, public body, public agency, public authority, or other entity that uses, has use of , or seeks to use water furnished by Baldwin County.

Customer: Any person, corporation, partnership, joint venture, public body that establishes water and/or sewer services with Baldwin County.

Defined Service Area - the area in which the Baldwin County has extended water lines and is currently, or in the future plans to, serve the citizens of Baldwin County with water, as that area is defined, from time to time, by Baldwin County.

Developer: Any person, corporation, partnership, joint venture, public body or legal entity that is selling, offering for sale, dividing, subdividing or developing property for residential,

commercial or industrial use and is required by law to connect or has connected to Baldwin County's water or sewerage system.

Industrial development: Any building or group of industrial use buildings in a single development, or any single industrial use building that may include more than one tenant, Industrial uses include, but are not limited to, manufacturing, processing, production, assembly and storage.

Leak credit: Adjustments that may be applied to a customer's bill upon receipt of proof that repairs have been made to a customer's water system.

Multi-family development: Any multiple occupancy residential building, including, but not limited to, apartments, townhouses, condominiums, duplexes, triplexes and quadruplexes.

Residential development: Any single-family residential use building or group of single-family residential use buildings in a single development, or any single residential use building that may include more than one tenant.

Schedule of Rates, Fees, and Penalties: The document that sets forth the rates, fees, and penalties associated with a customer's water service. This document is updated from time to time, maintained and kept on file with the Baldwin County's Finance Department.

Standards and Specifications: The document that sets forth the policies, procedures, design requirements, material requirements, and construction requirements of Baldwin County for the design, installation, and construction of water distribution and sanitary sewerage systems. This document is updated from time to time, maintained and kept on file with Baldwin County's Code Enforcement Department.

Water and Sewer Superintendent: The Superintendent of the Baldwin County Water and Sewer Department appointed by the County Manager, and authorized herein to fulfill the requirements of these rules and to be responsible for the operations of the Water and Sewer System or his or her designated authorized deputy, agent, or representative.

Those definitions as set forth in the Georgia State Minimum Standard Plumbing Code, which consists of the latest edition of the International Plumbing Code published by the International Code Council and any other Georgia State Amendments to the International Plumbing Code, are hereby incorporated as part of this ordinance.

Sec. 58-22. - Terms and Conditions of Service.

By establishing an account with Baldwin County, customer acknowledges acceptance of terms and conditions and must abide by all conditions of this Ordinance.

Sec. 58-23. - Access to Customer's Premises by Agents and Employees of Baldwin County.

Duly authorized agents and employees of Baldwin County shall have access at all hours to the exterior premises of the customer and developer for the purposes of installing and removing the property of Baldwin County; inspecting, repairing, and maintaining Baldwin County's facilities; reading and testing meters; and inspecting customer connections that may create negative impacts on Baldwin County's system.

Sec. 58-24. - Initial Water Service Connections.

(a) Any customer or developer desiring to be provided water service by Baldwin County shall make an application for water service at the office of the Baldwin County Water and Sewer Department located at 3014 Heritage Road, Milledgeville, GA 31061, or other method approved by the Baldwin County. An application for water service shall be made at the Baldwin County Board of Commissioners Annex, 1601 N. Columbia Street, Milledgeville, GA 31061 once the building opens in 2020.

(b) If the water distribution system is adjacent to or directly across the road from the customer's property and no water line extension is required, service will be provided upon the customer requesting service and meeting the terms of this ordinance and payment of all applicable fees, provided capacity is available.

(c) Upon complying with the above stated items, the customer will be placed upon the meter installation list. The connection and the meter will be installed by Baldwin County as soon as practicable thereafter. Application for water/sewer connection should be made thirty calendar days in advance. A Service Call Fee, as set forth in the Schedule of Rates, Fees, and Penalties shall apply if site conditions hinder meter installation.

Sec. 58-25. - Charges for Initial Water Service Connections.

(a) Each customer applying for use of water services of Baldwin County shall pay for the cost of establishing service.

(b) Any relocation or removal of water lines, meter boxes, fire hydrants and appurtenances to the water system of Baldwin County that are requested by the customer and authorized by Baldwin County, or required by Baldwin County, will be billed to the customer at cost.

(c) Customers must pay a deposit to Baldwin County in accordance with the Schedule of Rates, Fees, and Penalties. Baldwin County may require an additional deposit for customers whose payment status becomes delinquent.

Sec. 58-26. - Baldwin County's Responsibilities and Liabilities.

(a) Upon meeting the requirements of Article 4 of this ordinance, Baldwin County will install a water service line as near as practicable to the customer's desired location adjacent to the road right-of-way.

(b) Baldwin County may install its meter at or near the property line or at Baldwin County's option on the customer's property, typically within three (3) feet of the right of way.
(c) Baldwin County reserves the right to refuse service if the customer's plumbing system is installed in such a manner as to cause cross connections or backflow.
(d) Baldwin County assumes no liability for damages caused to private plumbing systems by varying pressure, interrupted services or water quality changes. This includes water loss due to broken or leaking pipes for any reason, or damages to person or property (before and/or after water loss).
(e) Baldwin County assumes no liability for replacement of and/or damage to landscaping, fencing, or other items that hinder Baldwin County's ability to provide service and/or maintenance to Baldwin County's property.

Sec. 58-27. - Customer's Responsibilities and Liabilities.

(a) Water furnished by Baldwin County shall be used for consumption by the customer only and shall not be resold unless the customer qualifies for special metering requirements, as covered in Article 13 of this Ordinance. 'The consumer shall not allow anyone else to connect on to the water systems serving the consumer. Disregard of this rule shall be sufficient cause for refusal and/or discontinuance of service.
(b) The customer has the following additional responsibilities and duties:
    (1) Where meter or meter box is placed on the premises of a customer, a suitable place shall be provided by the customer therefore, which is unobstructed and accessible at all times. The Customer shall not place any landscaping, fencing, or other items that hinder Baldwin County's ability to provide service and/or maintenance to Baldwin County property.
    (2) The customer shall furnish and maintain a private cut-off valve on the customer's side of the meter.
    (3) The customer's piping and apparatus shall be installed and maintained by the customer at the customer's expense and shall prevent backflow as specified in Article 8 of this Ordinance.
    (4) In order to be received as a customer and entitled to receive water from Baldwin County's water system, all applicants agree that any private wells located on their property are not physically connected to the lines of the Baldwin County's water system; and all applicants, by becoming customers of Baldwin County, agree that so long as they continue to be customers of the Baldwin County, they will not permit the connection of any private wells to the Baldwin County's water system.
    (5) Irrigation systems are required to have rain sensor shut-off switches, pursuant to O.C.G.A. §12-5-6.
    (6) Customers shall maintain his or her water system in compliance with the current Georgia State Minimum Standards Plumbing Code and ensure that said system is in water tight condition.

Sec. 58-28. - Backflow Prevention.

An approved Cross Connection Control Program is maintained by Baldwin County's Engineering Department in accordance with the Georgia Rules for Safe Drinking Water (GA Rules & Regulations 391-3-5-.13(4)).

Baldwin County shall deny or discontinue water service to any customer if a required backflow prevention device is not installed or properly maintained according to the Cross Connection Control Program. Water service shall not be restored to such premises until the deficiencies have been corrected or eliminated to the satisfaction of Baldwin County, and in accordance with the rules and regulations of the Georgia Department of Environmental Protection Agency ("Georgia EPD"). Residential connections shall be maintained in accordance with the Georgia State Minimum Standard Plumbing Code (International Plumbing Code with Georgia State Amendments).

Sec. 58-29. - Connections to Baldwin County's Water System by Persons Other Than Baldwin County Personnel.

Only Baldwin County personnel or authorized contractors can connect or tap on to the water distribution system. Violation of this provision shall authorize Baldwin County to immediately terminate water service without notice to the customer.

Sec. 58-30. - Plans and Specifications for Construction of Water Lines.

The Baldwin County shall have the right to specify the requirements, plans and specifications for the construction of water lines in Baldwin County's service area. All water lines shall be constructed according to the Standards and Specifications established and maintained by Baldwin Water and Sewer Department.

Sec. 58-31. - Water Line Extensions.

An approved Baldwin County Water Line Extension Policy is maintained and kept on file with the Baldwin County's Water and Sewer Department.

(a) Service to Residential, Commercial, and Industrial Developments: If the water line extension is to serve a residential, commercial or industrial development, the line shall be installed at the expense of the developer. Construction shall be per Baldwin County Standards and Specifications and shall be inspected by Baldwin County.
(b) Service to Residence: Baldwin County residents may request a water line extension to serve their property at a reduced cost. The resident requesting water service must meet the requirements of Baldwin County's Water Line Extension Policy, which may be revised as determined by the Water and Sewer Superintendent.

Sec. 58-32. - Meter Readings.

The water meter serving the customer's property shall typically be read on a monthly basis, or at the discretion of Baldwin County.

Sec. 58-33. - Special Metering Requirements.

(a) Master Meters
  (1) Water service shall be furnished to multi-family building or mobile home park through master meters and shall be charged at the appropriate rates established in the Schedule of Rates, Fees, and Penalties.
  (2) Commercial developments with multiple tenants shall be metered according to Baldwin County's Standards and Specifications and shall be charged at the appropriate rates established in the Schedule of Rates, Fees, and Penalties.
  (3) If private easements and/or agreements are necessary, they should be established or acquired accordingly and are not the responsibility of Baldwin County.
  (4) Water service shall be billed by Baldwin County and the responsible party shall pay for all charges contained in such bills.
  (5) Multi-Family developments, mobile home parks and commercial development buildings shall comply with State laws and regulations regarding submetering, reporting requirements to regulatory agencies, Georgia State Minimum Standard Plumbing Code, Georgia Rules for Safe Drinking Water (GA Rules and Regulations 391-3-5-.13), and any other requirements of the State. Meeting these requirements is solely the responsibility of the customer and Baldwin County bears no responsibility in this regard.
  (6) Any deviation from master metering configuration, or costs associated with a change in configuration to serve development, shall be at the sole expense of the customer and approved by Baldwin County.
  (7) Existing developments will be evaluated for need of master metering upon submission of plans to upgrade, retrofit or alter existing facilities.
  (8) If any development.is master-metered, said development may be considered a public water system per the Georgia Rules for. Safe Drinking Water, Chapter 391-3-5, and may be subject to additional regulations and monitoring requirements in accordance with the Safe Drinking Water Act. Baldwin County bears no responsibility for the creation of such a system.

(b) Fire Line Meters
  (1) The necessity of a fire line shall be determined by Code Enforcement and Fire Marshal.
  (2) All fire lines must be metered as detailed in Baldwin County's Standards and Specifications.

(3) If any existing unmetered fire line should demonstrate continuous consumption, the customer may be required to retrofit the fire line with an appropriate metering system.
(4) Existing developments will be evaluated for need of fire line metering upon submission of plans to upgrade, retrofit or alter existing facilities.

(c) Industrial Evaporation & Process Water
(1) Whenever an industrial customer uses significant quantities of metered water, as described in Baldwin County's Standards and Specifications, which is not discharged into the Baldwin County's sewer system, the customer may request a credit for the water not being discharged into the sewer system.
(2) It is the responsibility of the customer to provide documentation, drawings, or schematics sufficient for an accurate determination of water that does not enter Baldwin County's sewer system. All metering equipment, installation arrangement, and calibration requirements must comply with Baldwin County's Standards and Specifications.
(3) It is the sole discretion of Baldwin County to determine if any credits will be granted. The Water and Sewer Superintendent has the authority to assess additional fees due to the requested special services. Such fees shall be established by the Board of Commissioners from time to time and included in the Schedule of Rates, Fees, and Penalties.
(4) In order to qualify for credits, the customer must comply with all Baldwin County requirements, in addition to all local and state plumbing codes.

Sec. 58-34. - Rate Schedule.

(a) All water and sewer rates shall be set from time to time by the Baldwin County Board of Commissioners and included in the Schedule of Rates, Fees, and Penalties.
(b) Water rates will not increase without sufficient notice to the customer. Notice will be given to the customer by a publication of the rate changes once a week for two weeks in the official newspaper of Baldwin County prior to the rate increase.
(c) Upon adoption of the annual budget, the water and sewer rates in effect may be increased by 5 percent, unless otherwise determined by Baldwin County. The 5 percent increase shall be computed each year by increasing the previous year's rates by 5 percent. Said rates shall remain in effect until modified, amended or terminated by Baldwin County. All rates shall be approved by Board of Commissioners.
(d) Rates shall be established for each of the following customer classes: Residential; Commercial; Industrial; Irrigation; Municipal; Multi-family residential, All metered customers of Baldwin County shall be billed in accordance with the rate schedule that is appropriate to them.
(e) All customers will be required to pay the monthly base charge plus any consumption charges until termination of service, as set forth in the Schedule of Rates, Fees, and Penalties.

Sec. 58-35. - Billing and Collections.

(a) The customer shall pay promptly on a monthly basis all water registered by the meter serving said property at the rate or rates set by Baldwin County from time to time, which shall include water used, water wasted or leakage.
(b) The bill shall be paid by the fifteenth (15th) of each month. A Late Payment Fee as stated in the Schedule of Rates, Fees, and Penalties will be assessed on amounts that are not paid by the due date. In the event that the bill assessed thereon is not paid by the end of the business day of the twenty-fifth (25th) day of the month, Baldwin County shall have the right to commence procedures to terminate the water service and charge a nonpayment fee as stated in the Schedule of Rates, Fee and Penalties. If the 25th falls on a weekend or holiday then the nonpayment fee will be imposed if the bill is not paid by the end of the next business day.
(c) Baldwin County may elect to allow electronic paperless billing. It is the customer's responsibility to maintain an updated electronic billing address. When Baldwin County takes the normal action in sending an electronic paperless bill (or notice of bill), that bill (or notice of bill) is deemed to have the same standing as a paper bill delivered to the customer's physical address. Failure to pay an electronic paperless bill by the due date will be treated in the same manner as traditional billing. Failure of the customer to receive the electronic paperless bill (or notice of bill) does not relieve the customer from the obligation to pay by the due date.
(d) If customer's account reaches 'cut-off' status, a non-payment fee as stated in the Schedule of Rates, Fees, and Penalties will be added to the customer's account. This fee shall be charged regardless of whether water service is physically terminated. If service is discontinued for non-payment of bill, a Service Termination Fee, as stated in the Schedule of Rates, Fees, and Penalties, will also be added to the customer's account. Baldwin County will not resume water service until the account balance has been satisfied. Customer shall be responsible for any amount due Baldwin County.
(e) Baldwin County may file a lien against the customer's property for non-payment of amounts owed Baldwin County. If a lien is filed, then a Lien Filing Fee, as stated in the Schedule of Rates, Fees, & Penalties, as well as any interest accrued, will be added to the customer's account each time the lien is filed or renewed.

Sec. 58-36. - Complaints/Adjustments.

(a) If the customer believes a bill to be in error, Baldwin County shall be notified before the bill becomes delinquent. Any claim shall not be effective in preventing discontinuance of service as heretofore provided. The customer may pay such bill under protest and said payment shall not prejudice the claim.
(b) Settlement of claims and adjustments of bills are subject to the following additional provisions:

(1) Any customer who fails to notify Baldwin County within thirty (30) days after the date of said bill of any irregularities or errors that may be in said bill shall waive any right or claim for correction or refund.
(2) Water meters will be tested at the request of the customer. If the meter is found to be malfunctioning, no charge will be made. However, if the meter is found not to be malfunctioning, the customer will be required to pay a fee as shown in the Schedule of Rates, Fees, and Penalties. Said fee will be added to the next monthly billing.
(3) If the meter is found to be malfunctioning, Baldwin County may charge for the period since the last known accurate reading based on the average of the three previous months' consumption. A different period may be used if it appears that the previous three months would not correctly reflect the period in which the malfunction occurred.
(4) Water meters will be re-read at the request of the customer. If it is determined that the original reading was incorrect, then an appropriate adjustment will be made to the customer's bill. However, if it is determined that the original reading was correct, a Service Call Fee as shown on the Schedule of Rates, Fees, and Penalties may be added to the customer's bill.
(5) If it is determined that a leak is present on a customer's property, and satisfactory documentation of repair is presented to Baldwin County, then a leak credit may be applied to the customer's account.
(6) Baldwin County staff may exercise discretion in administration of fees.

Sec. 58-37. - Procedures for Termination of Water Service.

(a) Baldwin County may terminate water services to customers who fail to pay their water bills as required by this Ordinance.
(b) Baldwin County shall forward to each customer, at the billing address provided by the customer, bills for water services provided. All water bills shall be due on the date set Forth on the bill.
(c) If payment is not received by the close of business on the tenth (10th) day after the due date of the bill, Baldwin County's personnel may terminate service to the customer at any time after said date.
(d) Water service shall be terminated without notice to any customer that may be obtaining water through fraudulent means, has issued a payment that has been returned to Baldwin County marked "Insufficient Funds", "Account Closed," or other reason, or is attempting to abscond without the payment of water bills due. The appropriate returned payment fee, as shown on the Schedule of Rates, Fees, and Penalties, will be added to the customer's account in each event of a returned check, ACH, Credit Card Charge back, or other type of returned payment.
(e) If the customer does not provide access to the meter so that service may be restored, and Baldwin County is required to make an additional service call to restore service, an

additional Service Call Fee as shown on the Schedule of Rates, Fees, and Penalties wilt be assessed and added to the customer's water bill per service call.

(f) If service has been discontinued for non-payment, a customer can re-establish service by paying the total amount due Baldwin County, together with any other applicable service call fees, charges and penalties. Baldwin County may also collect additional security deposit for customers whose payment status becomes delinquent.

(g) Once payment is received, service will typically be restored the following business day.

(h) Once service has been discontinued by Baldwin County, a customer shall not tamper with the meter or service line without prior authorization. A Tampering Fee as shown on the Schedule of Rates, Fees, and Penalties will be added to the customer's account.

(i) If Baldwin County physically removes the meter, then a Meter Removal Fee as shown on the Schedule of Rates, Fees, and Penalties will be added to the customer's account.

Sec. 58-38. - Suspension of Services.

(a) When water service is discontinued by request of the customer to Baldwin County, or by act of Baldwin County, Baldwin County shall apply the refundable deposits to the balance of the bill owed by the customer and refund the difference, if any exists, to the customer.

(b) Service may be suspended or discontinued without notice for the following reasons:

(1) To prevent fraud, abuse, or excessive/negligent water usage.

(2) Improper maintenance of irrigation systems.

(3) Customer's willful disregard of Baldwin County's rules.

(4) Emergency repairs.

(5) Insufficiency of water supply due to circumstances beyond Baldwin County's control.

(6) Legal processes.

(7) Direction of public authorities.

(8) Strike, riot, fire, flood, unavoidable accident, actions of others or acts of God

(9) When a property owner fails to maintain the water system on the property or the improvements located thereon, in compliance with the current Georgia State Minimum Standards Plumbing Code.

(10) Creation of a hazardous or unsafe condition to the water facilities of Baldwin County.

(11) Other reasons as determined by Baldwin County.

Sec. 58-39. - Allocation of Water Services.

Baldwin County shall have the right from time to time, if necessary, to allocate water to the customer under specific rules and regulations in effect now or that may later be adopted by Baldwin County or imposed on Baldwin County by the State of Georgia.

(a) From time to time, it may become necessary for the Water and Sewer Superintendent to impose bans, restrictions or curtailments of water usage.
(b) The Water and Sewer Superintendent may issue a Notice of Noncompliance to any customer/entity that uses water in violation of the restrictions. Anyone receiving a Notice of Noncompliance must pay the charges as listed on the Notice. Anyone who fails to pay the charges will be subject to termination of water service until such charges are paid in full.

Sec. 58-40. - Prohibition against Tampering with Baldwin County Property.

(a) Any customer, person, firm or corporation who, without the authorization of Baldwin County:
    (1) Connects onto a Baldwin County water line;
    (2) Disconnects a water line from a Baldwin County water line;
    (3) Connects onto a Baldwin County water meter;
    (4) Disconnects a Baldwin County water meter;
    (5) Moves, removes, changes, or alters the location of a water meter;
    (6) Changes, alters, or damages any water meter or water line so as to prevent proper registrations of water passing through said water meter or line;
    (7) Obtains water;
    (8) Prevents any other person from obtaining water;
    (9) Obstructs or otherwise interferes with the reading or maintenance of any water meter;
    (10) Obstructs or otherwise interferes with any water line, fire hydrant, pumping station or any appurtenances to Baldwin County water facilities;
    (11) Creates a hazardous or unsafe condition to the Baldwin County water facilities; may be subject to a Notice of Violation, termination of service, and/or legal action.
(b) Any customer, person, firm, corporation or legal entity who, without authorization from Baldwin County, takes water from any fire hydrant, designated fire line, or other unmetered line, shall pay to Baldwin County an Unauthorized Usage Fee as shown on the Schedule of Rates, Fees, and Penalties. Additionally, the offending person/entity must pay the value of water used if greater than the amount that would be covered by the stated amount in the Schedule of Rates, Fees, and Penalties, as well as any costs or consequential damages suffered by Baldwin County.
(c) Any customer, person, firm, corporation, or legal entity which Baldwin County has to take legal action against for violation of any part of this Ordinance shall reimburse Baldwin County all costs, legal expenses, attorney's fees, and expenses associated with the collection thereof that are incurred by Baldwin County as a result of the collection or the enforcement of this Ordinance,
(d) Any customer, person, firm, or corporation who violates the terms of this Ordinance and does not pay the fees assessed above shall be subject to immediate termination of

water service. At Baldwin County's discretion, said fee may be added to the water bill if a billing account exists. Also, a lien may be filed upon the public records of Baldwin County with the same being collected, as other liens are authorized to be collected under the terms of this Ordinance.

Sec. 58-41. - Amendment to Ordinance.

Since special circumstances frequently occur which require changes, amendments or modifications to this Ordinance, this Ordinance may be amended without notice upon the approval of said changes, amendments or modifications by Baldwin County.

Sec. 58-42. - Enforcement of Ordinance.

Baldwin County shall enforce the terms of this Ordinance through administrative procedures hereinbefore set out or through legal actions in a court of law.

a) Generally
All water system facilities shall be considered the property of the Baldwin County. Any Consumer, Developer, property owner, person, firm, Cooperation, company, joint venture, public body, public authority, or other entity who, without the authorization of the Baldwin County Water and Sewer Department,
(1) Connects onto a water line of the Baldwin County Water and Sewer Department;
(2) Disconnects to a water line from a water line of the Baldwin County Water and Sewer Department;
(3) Connects onto a water meter of the Baldwin County Water and Sewer Department;
(4) Disconnects a water meter of the Baldwin County Water and Sewer Department;
(5) Moves, removes, changes, or alters the location of a water meter;
(6) Changes, alters, or damages any water meter or water line so as to prevent proper registration of water passing through said water meter or line;
(7) Obtains water or prevents any other person from obtaining water;
(8) Obstructs or otherwise interferes with the reading or maintenance of any water meter;
(9) Obstructs or otherwise interferes with any water line, fire hydrant, pumping station or any appurtenances to water facilities of Baldwin County;
(10) Creates a hazardous or unsafe condition to the water facilities of Baldwin County Water and Sewer Department;
If convicted shall be guilty of a misdemeanor and shall be subject to a fine of no less than five hundred dollars ($500.00) nor more than one thousand dollars ($1000.00) and/or imprisonment for not less than thirty (30) days nor more than one hundred twenty (120) days.

b) Hearings

The Magistrate Court of Baldwin County, Georgia, shall have jurisdiction to hear, try and dispose of citations that are issued for said violations.

c) Citations

Any consumer, developer, property owner, person, firm, corporation, company, joint venture, public body, public agency, public authority, or other entity who is charged with having violated this Ordinance shall be issued a citation by the Baldwin County Sheriff's Department or a representative of the Baldwin County Water and Sewer Department. Said citation shall require the appearance of the violator in the Magistrate Court of Baldwin County, to answer said charges.

d) Enforcement, Generally

(1) The Baldwin County Water and Sewer Department shall enforce the terms of this ordinance through the administrative procedures herein set out or through legal actions in a court of law. The Baldwin County Water and Sewer Department shall have the power to issue citations and to call upon the Baldwin County Sheriff's Department or any Police Department created by Baldwin County or its successors to enforce the terms of this ordinance.

(2) Any fine which is imposed for violation of any part of this Ordinance shall be collected by the County and paid from the County to the Baldwin County Water and Sewer Department for the purpose of mitigating the costs of constructing, operating, and maintaining the water system of Baldwin County.

e) Water Use Restrictions; Enforcement

(1) Generally;

The Baldwin County Water and Sewer Department shall be empowered, in times of drought or otherwise whenever, at the discretion of the Baldwin County Water and Sewer Department, such measures are needed, to promulgate restrictions on the use of water by consumers.

a. If a Consumer uses water in violation of restrictions imposed by the Baldwin County Water and Sewer Department, the Baldwin County Water & Sewer Department shall be empowered to automatically impose a fine upon said property owner, which shall not exceed $250.00 per violation. Said fine shall appear on the property owner's current billing and shall be delineated separately from water and sewer use billing in such a manner as would be reasonably likely to inform a person of normal intelligence that a fine is being imposed for violation of water use restrictions.

b. If a fine imposed by the Baldwin County Water and Sewer Department under this Article is disputed by the property owner, said property owner shall, upon written request within fifteen (15) days of the date of the bill which includes the fine (or the next working day if the fifteenth (15th) day is a weekend or legal holiday), be entitled to attempt to resolve the dispute before the Baldwin County Water and Sewer Department and Baldwin County Board of Commissioners. The

dispute shall be presented at the first available board meeting after receipt of the request.

c. Notice of the property owner's right to dispute shall be included in any bill which imposes a fine and shall read substantially as follows:
    1. If you dispute that you have violated Baldwin County's Water Use Restrictions, you have the right to attempt to resolve the dispute within fifteen (15) days (or next working day if the fifteenth (15th) day is a legal holiday or weekend) before the Baldwin County Board of Commissioners. The dispute shall be presented at the first available board meeting after receipt of the request and you will be given three (3) day notice thereof Continuances will be granted for legal cause only.
    2. If, after presenting the dispute before the Baldwin County Board Water and Sewer Department and Baldwin County Board of Commissioners, based on the facts presented, the Board of Commissioners is unable to remove the fine, the same shall become due and payable and the consumer shall have the right to seek a refund in the Superior Court of Baldwin County, by filing a petition therein.

(2) Termination of Services for Failure to Pay Fine:
If a property owner fails to pay a fine that is due and payable under this Article, the Baldwin County Water and Sewer Department shall be empowered to terminate water services to that property owner.

Sec. 58-43. - Resolution of Apparent Conflicts.

To the extent any ordinances or parts of ordinances are in conflict, that ordinance or part of ordinance adopted most recently shall be construed to repeal the prior ordinance or part of ordinance to the extent the ordinances are in conflict.

Sec. 58-44. - Effective Date of Ordinance.

This Ordinance and amendments shall become effective upon the adoption thereof by the Baldwin County Board of Commissioners.

BALDWIN COUNTY WATER LINE EXTENSION POLICY

ARTICLE I — PLANS AND SPECIFICATIONS FOR CONSTRUCTION OF WATER LINES

The Baldwin County Board of Commissioners shall have the right to specify the requirements, plans and specifications for the construction of water lines in Baldwin County. All water lines constructed by any Consumer or Developer shall be constructed according to the plans and specifications established by the Baldwin County Board of Commissioners for the construction of water lines in Baldwin County. No water line shall be covered without first being inspected and approved by the Baldwin County Water and Sewer Department

ARTICLE II — WATER SERVICE WHERE NO EXTENSION IS REQUIRED

A. Application. Any Consumer or Developer desiring to be provided water services by the County to property owned by that Consumer and Developer shall make an application for water services in person at the offices of the Baldwin County Water & Sewer Department or at such other place as the Baldwin County Board of Commissioners may designate from time to time. The owner (whether Consumer or Developer) of the Property to be served shall be responsible for filling out and providing the Baldwin County Water & Sewer Department with a completed application.
B. Water Services to Consumer with no Extension
    1) Is adjacent to a Consumer's property and no water line extension is required, service will be provided upon the Consumer executing the water subscription contract and payment of the connection fees.
    2) Is across the road from a Consumer's property, service will be provided upon the receipt of payment from the Consumer of the connection fees.
C. Water Services to Developer with no Extension
    1) If the water distribution system is adjacent to a Developer's property (as described in the vesting deed before subdivision), service will be provided to the nearest property line of the Developer's property (as described in the vesting deed before subdivision) so long as the property (as planned for development) has been properly deeded, subdivided into a platted subdivision and recorded of record as a subdivision (whether commercial, industrial, or residential) according to the laws of the State of Georgia and the Ordinances of Baldwin County and so long as the Developer has executed a water subscription contract and has paid the applicable connection fees. If the water distribution system is directly across the road from a Developer's property, service will be provided according to the provisions above, with the addition of the Developer paying for the boring, casing and pipe to cross the road.
    2) A Developer shall, at his/her sole cost, extend water lines to each Subdivision so that the line will serve each lot developed therein.
    3) Any property owner (not otherwise meeting the definition of Developer) who purchases a sub-divided plot of property from a Developer that has extended

water lines into a Subdivision shall be considered a Consumer for the purposes of this Article.

ARTICLE IV — WATER LINE EXTENSIONS

Initially, when public funds are available and a need for expansion arises, at the sole discretion of the Baldwin County Board of Commissioners, the Baldwin County Water & Sewer Department will extend water lines throughout the County in the order established by the Board of Commissioners. The priority list shall be based upon a balance of sound engineering and the goal of expansion of service to most possible Consumers and Developers. Said priority list may be changed, from time to time without notice, at the sole discretion of the Baldwin County Board of Commissioners. During the initial extension of water lines throughout the county and thereafter, extension of water lines at the request of a Consumer or Developer shall be governed by the provisions of this Article.

A. Water Service to Residential Consumers Requiring Line Extensions.
    1) Generally: Water lines may be extended along county roads, which have a minimum dedicated right of way of sixty feet (60), or along presently existing county roads where easements acceptable to the Baldwin County Water & Sewer Department for the installation and maintenance of the water line have been obtained at no expense to Baldwin County Board of Commissioners.
    2) Applications: Any Residential Consumer wishing to have water lines extended to their property shall make an application for water services in person at the offices of the Baldwin County Water & Sewer Department.
    3) Application fee: Prior to the commencement of construction, the Residential Consumer to whose property water lines are to be extended shall pay a sum estimated by the Baldwin County Water & Sewer Department per linear foot of water line (of sufficient capacity to service the Residential Consumer) installed from the existing Baldwin County water line to the Residential Consumer's residence (or, in the case of planned but not yet constructed residences, to a point perpendicular to where the residence is planned to be constructed). The estimated sum shall be sufficient to cover all costs associated with design, materials, and construction involved in the extension. Installations over rock and wetlands are impossible to estimate and will be charged at cost.
        a) At its sole discretion, the Baldwin County Water & Sewer Department may establish a program by which the Residential Consumer may finance the cost of the cost of the extension over a set period of time. In such instances, the Residential Consumer would make regular payments as part of the monthly water billing.
        b) In the event that it becomes apparent to the Baldwin County Water & Sewer Department that the cost of extension of water lines to a Residential Consumer exceeds the charged estimate, Baldwin County Water & Sewer Department may immediately terminate work on the extension until such time as the Residential Consumer pays (or agrees to pay under paragraph (B. Water

Services to Residential Developers Requiring Line Extensions) of this Section) such additional funds as are necessary.

c) In the event that it becomes impossible, at the sole discretion of the Baldwin County Water & Sewer Department, to install water lines to a Residential Consumer, the Baldwin County Water & Sewer Department shall refund the Application fee provided for in this section.

4) Additional Obligations: In addition to all other obligations placed upon Residential Consumer by this Policy or other applicable law, prior to the Baldwin County Water & Sewer Department approving any Residential Consumer's application for the extension of water lines and water services, the Residential Consumer shall:
   a) Obtain such right of way deeds and/or easements as are required by the County and/or the Baldwin County Water and Sewer Department.
   b) Execute the line extension petition provided by the Baldwin County Water and Sewer Department.
   c) Pay the water line extension fees described in Article IV, paragraph A. (3).
   d) Pay the applicable connection fee.
   e) Execute a water subscription contract application with Baldwin County Water & Sewer Department. If the application is approved, an estimated date of completion will be given to the Residential Consumer however, a date of completion cannot be guaranteed due to changes in work schedule, weather conditions, equipment breakdown, delays in delivery of materials, improvement of right-of-way or other unpredictable circumstances.

B. Water Services to Residential Developers Requiring Line Extensions

Generally If a water line extension is to serve a Developer's residential subdivision development, the Developer shall, in addition to obligations set forth in Article IV, B above (regarding Residential Consumers Requiring Line Extensions); submit to the Baldwin County Water and Sewer Department the following;

1) An application for line extension;
2) Two (2) copies of a plat or accurate drawing of the property to be served. The plat or drawing shall contain the following information:
   a) Location of the closest existing Baldwin County water line which is of sufficient size to serve the property;
   b) Location of the existing roads and proposed roads to serve the property;
   c) An exact footage measurement of water line required to be installed in order to serve the property;
   d) Location of all water lines and appurtenances to be constructed in the area to be developed.
3) The required water line extension fee.

C. Water Services to Industrial and Commercial Developers Requiring Line Extensions

1) Generally: If a water line extension is to serve a Developer's industrial or

Commercial development, the Developer shall, in addition to obligations set forth in Article IV, B above (regarding Residential Consumers Requiring Line Extensions); submit to the Baldwin County Water and Sewer Department the following;

a) Line extension application to serve industrial/commercial development;
b) A letter from the Baldwin County Land Use Administrator stating that the property has been met Baldwin County Land Use Regulations for the proposed use;
c) Two (2) copies of a plat or accurate drawing of the property to be served. The Plat or drawing shall contain the following information:
    1. Location of the closest existing Baldwin County water line which is of sufficient size to serve the property;
    2. Location of the existing roads and proposed roads to serve the property,
    3. An exact footage measurement of water line required to be installed in order to serve the property;
    4. Location of all water lines and appurtenances to be constructed in the area to be developed;
    5. Estimated daily consumption.
    6. The required water line extension fee.

2) Additional Lines: If units served will require fire lines and/or sprinkler systems to the structure, expenses for same shall be borne by the Developer.

D. Water Line Services Inside Residential Subdivisions, Industrial Sites and Commercial Sites

1) Generally: It shall be a Developer's responsibility to construct and complete Systems inside all residential, industrial, and commercial subdivisions, as well as all industrial and commercial sites. The Developer shall:
    a) Submit the required application to the Baldwin County Water and Sewer Department for its approval;
    b) Pay for all labor and materials necessary to construct the water line inside the area to be developed, including costs for supply lines, fire hydrants, tees, gate valves, reducers and regulators, together with all meter service connection material, including cooperation and curb stops, inserts and service lines to meters, and any other pertinent structure that may be needed for proper construction of said lines and appurtenances thereto;
    c) Construct all water lines according to plans and specifications of the Baldwin County Water & Sewer Department.
2) Additional Obligations Upon completion of the construction of the water lines into the subdivision, but prior to commencement of water services by the Baldwin County Water and Sewer Department, a Developer shall:
    a) Execute an affidavit stating the actual cost of all labor and materials expended in the construction of all water lines and appurtenances thereto;
    b) Execute a deed conveying the water line, appurtenances thereto, and a twenty-foot permanent easement to the Baldwin County Board of Commissioners;

c) Post an irrevocable letter of credit from a banking institution located within the State of Georgia with the Baldwin County Board of Commissioners in the amount of ten (10) percent of the total cost of construction of said line which said letter of credit shall guarantee payment to the Baldwin County Water & Sewer Department for any repairs, maintenance and locating of facilities as needed in said line over a period of time as required by the Baldwin County Water & Sewer Department.
d) Submit two (2) copies of "as-built" plans of said water lines and appurtenances thereto showing the exact location of the water line and appurtenances thereto;
e) Execute an affidavit prescribed by the Baldwin County Water & Sewer Department stating that the cost of all labor and material has been paid in full.
f) Pay the required connection fees set forth in the Schedule of Rates, Fees and Penalties.

E. Capacity Fees

1) Generally. When a Developer requests a water line extension for Proposed Development from the Baldwin County Water and Sewer Department the Superintendent shall determine the following:
   a) The size of the water line that will be needed for the Development (the minimum water line that can be constructed in Baldwin County along County and State public roads is (6 inches).
   b) The number of fire hydrants, T's and T valves at public road intersections, cutoff valves, and metering stations that will be needed to provide water service to the Development.
   c) If a larger water line should be constructed to accommodate future growth and development along the length of the newly constructed line, or to serve other areas of Baldwin County from the line being built, and determine the cost of constructing the larger line and the appurtenances thereto.

2) Construction of larger lines. The Baldwin County Water and Sewer Department shall then determine if it wants to have the larger line constructed. If so, it shall have the option to either.
   a) Pay the additional cost itself or
   b) Require the developer to pay the additional cost.

3) Development within one (1) mile of existing line. If the Development is located within one (1) mile of an existing Baldwin County water line that has sufficient capacity to provide for the water services needed by the Development, the Developer will pay 100% of all costs incurred by the Baldwin County Water and Sewer Department in providing water services to the Developer's property plus the cost of the construction of the water line for the entire length of that portion of the Developer's property that fronts the public road along which the Developer is receiving water services.
4) If the Development is located more than one (1) mile from the county’s existing water line, the Developer will pay the total cost of the construction of the water line required by

the Baldwin County Water and Sewer Department to the Development, under this scenario, the Developer will be entitled to receive a rebate from the Baldwin County Water and Sewer Department as additional customers connect onto the line in the following manner:

a) Property owners along the public road will be notified of the construction of the line.
b) Any property owner that contributes the fees set by the Baldwin County Water and Sewer Department for the line extension and line capacity, prior to the Baldwin County Water's acceptance of the line, will not be required to pay the line extension and line capacity fee.
c) Those property owners that do not contribute to the line extension will be charged the line extension and capacity fee at the time that they connect onto the service.
d) Fees cumulative. The fees provided for in this Paragraph shall be in addition to any other application fee, tap-on fee, metering fee, or other fee required by Baldwin County Water & Sewer Department to connect to the Baldwin County water service as established elsewhere in this Policy.
e) Establishment of line extension and capacity fees. The Baldwin County Board of Commissioners shall set the line extension and capacity fees from time to time.

ARTICLE V — WATER SUBSCRIPTION CONTRACTS REQUIRED

Prior to commencement of water service by the Baldwin County Water and Sewer Department each Consumer and/or Developer wishing to become a Customer of Baldwin County must execute a water subscription contract with Baldwin County Water and Sewer Department

ARTICLE VI — CHANGES AFTER INITIAL WATER SERVICE

A. Relocations:

Any relocation of waterlines, appurtenances, fire hydrants, or the like requested by the customer or required by the Baldwin County Water and Sewer Department will be billed to the Customer at the actual cost of the removal or relocation of each of said items. An additional 10% fee shall be charged for administrative expenses.

B. Professional Buildings:

A professional building shall have a meter installed for each unit and the prevailing tap-on fee shall be paid for each unit.

C. Entry upon Premises for Purposes of Inspection.

The Baldwin County Water and Sewer Department shall be authorized to conduct inspections to determine compliance with this Policy by the program manager, or such other employee or representative as may be appointed by the Baldwin County Water and Sewer Department from time to time. Agents and employees of the Baldwin County Water & Sewer Department shall be authorized to enter the premises of the Customer without notice during daylight hours for the purpose of inspection and testing of the backflow prevention device.

D. Installation of Thermal Expansion Device.

An auxiliary release valve, or expansion chamber, shall be installed where water is heated and stored in a Customer's water system, or a branch of the system, which has been closed by the installation of a backflow prevention device. Said auxiliary release valve or expansion chamber shall be installed to limit thermal expansion of the heated water to not more than eighty (80) psi static (no-flow) pressure at any fixture on the system.

E.. Lawn Sprinkler or Irrigation Systems.

1) Lawn sprinkler or other irrigation systems, when connected to the Baldwin County water system, shall include adequate provision for drainage and backflow prevention.
2) Where chemicals, pesticides, fertilizer, or other additives are utilized with a sprinkler system, said system shall have an approved reduced pressure zone (RPZ) backflow prevention device.

ARTICLE XVIII — ALL LOCATION OF WATER SERVICES

The Baldwin County Water and Sewer Department shall have the right from time to time, if necessary, to allocate water to a Customer under specific rules and regulations that may hereinafter be adopted by the Baldwin County Board of Commissioners.

ARTICLE XIX — AMENDMENTS TO POLICY

Since special circumstances frequently occur which require changes, amendments or modifications to this Policy, this Policy may be amended by the Baldwin County Board of Commissioners at a Public Meeting.

ARTICLE XX — PROMULGATION OF RULES AND/OR POLICIES

The Baldwin County Board of Commissioners develop, implement, and administer such rules, regulations, and policies as are necessary for the construction, maintenance and operation of the water facilities of Baldwin County, including but not limited to achieving and maintaining compliance with the rules, regulations and policies of all federal or state agencies having jurisdiction over same.

CITY OF MEBANE
NORTH CAROLINA

STANDARD SPECIFICATIONS

AND

DETAILS

FOR

WATER, SEWER AND STREET IMPROVEMENTS

NORTH CAROLINA PROFESSIONAL SEAL 039206 ENGINEER S. KYLE SMITH

6/9/2022

Revised June, 2022

TABLE OF CONTENTS

		Pages
Table of Contents	……	TC-1
Introduction	……	1
Material Specifications	……	MS-1 to MS-8
Street and Site Improvements: Detailed Specifications for Installation	…..	SI-DSI-1 to SI-DSI-11
Water Lines: Detailed Specifications for Installation	……	W-1 to W-12
Sanitary Sewer Lines: Detailed Specifications for Installation	……..	SS-1 to SS-14

DETAILS

WATER	……	W-1 to W-27
SEWER	……	SS-1 to SS-22
STREET	……	ST-1 to ST-21

MISCELLANEOUS ITEMS

1.	Water Taps Over 1”	……..	MI-1
2.	Sewer Taps	……	MI-1
3.	Fire Lines and Sprinkler Systems	……..	MI-1
4.	Broken Curb Policy	……	MI-2
5.	Construction Inspection	……	MI-2
6.	Construction “As Builts”	……	MI-3
7.	Sewer Line Tie-ins	……..	MI-3
8.	Parking Lots	……	MI-3
9.	Project Requirements and Related Timing of Procedures	……	PR-1 to PR-2
10.	Construction Checklist	……	CC-1 to CC-7

I N T R O D U C T I O N

The purpose of these standards is to serve as a guide in the preparation and submittal of plans and for the construction of roadway, utility, and development projects in the City of Mebane. These guidelines meet the current design standards and ensure more uniformity in the design of those projects. Engineers are encouraged to use these standards in their design process. It is not the intent of this manual to provide an explanation for every design problem encountered, nor, as a substitute for experience, sound judgment, and engineering knowledge.

The City has other ordinances and policies that relate to new construction projects including the following: Mebane Storm Sewer Design Manual, Mebane Phase 2 Post Construction Ordinance and Manual, Riparian Buffer Protection Ordinance, Water Supply Watershed Ordinance, and the Mebane Unified Development Ordinance. Engineers are to refer to these documents for specific requirements as a part of their design process.

The City of Mebane will use these standards and requirements along with sound engineering principles to review the detailed engineering drawings. These standards shall apply to all roadway and utility improvements and developments within the City of Mebane. In addition, these standards apply to areas outside the City Limits that are under the jurisdiction of the City.

The City of Mebane has the right of final approval over all construction work done under these guidelines and no work will be accepted until approval is made by the City. Please contact the City Engineer at (919) 563-5901 or Public Utilities Director at (919) 563-3401 with any questions regarding these standards and specifications.

Note: Shop drawings for water, sewer, & storm drainage related materials are to be submitted to the City for review approval prior to installation. Additional material specifications may be required at times.

CITY OF MEBANE

Revised June, 2022

MATERIAL SPECIFICATIONS

1. General Conditions
2. Cement
3. Sand
4. Coarse Aggregate
5. Water
6. Concrete
7. Steel for Reinforcement
8. Joint Materials
9. Mortar
10. Brick
11. Brick Masonry
12. Structural Steel
13. Storm Sewers
14. Catch Basin Frames & Covers
15. Water Main Materials
16. Ductile Iron Pipe and Fittings
17. Gate Valves
18. Swing Check Valves
19. Tapping Sleeves
20. Tapping Valves
21. Valve Boxes
22. Fire Hydrants
23. Mechanical Joint Restraint
24. Manhole Ring & Covers
25. Manhole Steps
26. Precast Manholes
27. Small Size Pipe
28. Air Release Valve
29. Steel Encasement Pipe
30. Carrier Pipe in Encasement
31. PVC Gravity Sewer Pipe
32. Sewer Force Mains
33. Aggregate Base Course
34. Asphalt Concrete Binder Course
35. Asphalt Concrete Surface Course
36. Prime Coat
37. Tack Coat
38. Pavement Replacement
39. Stabilization Stone for Pavement Cuts
40. Stabilization Stone for Ditches
41. Concrete Curb & Gutter
42. Rip Rap
43. Guarantee

Note: Shop drawings for water, sewer, & storm drainage related materials are to be submitted to the City for review approval prior to installation. Additional material specifications may be required at times.

1. General Conditions. The following Specifications cover the material under the applicable documents. Unless otherwise specified, all materials used in the work under this contract shall conform to the requirements of the current specifications of the American Society for Testing Materials, and shall be tested in accordance with the current specifications or current methods of testing of ASTM, where specifications and methods of testing have been adopted, revised, or proposed for such materials. No materials shall be used on the work until accepted by the Engineer, and all materials rejected by the Engineer as unsuitable, or not in conformity with the Plans or Specifications, or failing to pass the required tests, shall be removed immediately from the work at no expense to the City. Failure to condemn materials on preliminary inspection shall not be grounds for acceptance if future defects are found. All materials and equipment shall be new and free from all flaws or defects.

2. Cement. All cement used in mortar, or concrete shall conform to Specifications for Portland Cement of ASTM C-150. Brand of cement proposed for use by the Contractor will be subject to the approval of the Engineer. Type II shall be used in all work unless approved by the Engineer.

3. Sand. All sand used in mortar or concrete shall be clean, sharp, practically free from loam, clay or organic matter, and so graded as to ensure workability and water tightness when mixed with other ingredients. Sand will conform to ASTM Specifications C-33 and when made into mortar will have a compressive strength at 7 and 28 days of not less than 100% of mortar made with standard sands.

4. Coarse Aggregate. Coarse aggregate will consist of broken stone, sound, hard and tough, and will conform to the specifications of coarse aggregate given in ASTM Specification C-33. Stone will be broken to the sizes hereinafter specified under "Concrete" for the various classes of concrete, and grading will be well within the limits specified.

5. Water. Water used for mixing concrete and mortar will be clean, and free from deleterious amounts of acids, alkalis, and organic materials.

6. Concrete. All concrete shall be made of Portland cement, water and aggregates as hereinbefore specified, and shall further be in accordance with the following definite requirements for the various classes.

A design of the mix made by an independent laboratory, approved by the Engineer, for each class of concrete, shall be submitted for approval before concreting is started.

During progress of the work, standard compressive strength test specimens shall be made and cured by the Contractor in accordance with ASTM Standard Method, Designation C-31, and tested - by an independent testing laboratory in accordance with ASTM Standard Method, Designation C-39. At least 3 cylinders will be made for each test. Tests results shall be submitted for each thirty- (30) cubic yards, or fraction thereof, for each class of concrete used. Should there be any evidence that concrete is not up to standard, a strength test may be required at any time and the cost paid by the contractor.

If 100 LF of sidewalk is poured, at least one (1) test must be performed with at least 3 cylinders made per test. Test on less than 100 ft. may be done at Engineer’s request.

Class A concrete shall have a 28-day compressive strength of not less than 3,000 lbs. per square inch and a slump of from 3 to 5 inches and a maximum water-cement ratio of 0.48.

Coarse aggregate for all classes of concrete shall be commercial 1-inch stone, all of which shall pass a 1-1/2" screen.

All concrete used shall be "ready-mixed" concrete made in accordance with ASTM Standard Method Designation C-94. Cement, aggregate, water and design of mixes shall be as above specified. Elapsed time for placing concrete, between adding the mixing water to the mix and placing the concrete in the forms, shall not exceed that set forth in Table 1000-2.

TABLE 1000-2 ELAPSED TIME FOR PLACING CONCRETE		
Air or Concrete Temperature Whichever is Higher	**Maximum Elapsed Time**	
	No Retarding Admixture Used	**Retarding Admixture Used**
90˚F or above	30 minutes	1 hour 15 minutes
80˚F through 89˚F	45 minutes	1 hour 30 minutes
79˚F or below [A]	60 minutes	1 hour 45 minutes
70˚F through 79˚F [B]	60 minutes	1 hour 45 minutes
69˚F or below [B]	1 hour 30 minutes	2 hour 15 minutes

[A] Applicable to Class AA, A, and Drilled Pier Concrete
[B] Applicable to Class B Concrete

The concrete temperature at the time of placing in the forms shall not be less than 50°F nor more than 95°F except where other temperatures are required by N.C. State Highway Commission's "Standard Specifications for Roads and Structures", January, 2018 as amended.

No concrete shall be placed when the air temperature is below 50°F and is falling. The placing of concrete shall be permitted with permission at air temperature between 40°F and 50°F when said air temperatures are rising.

Deliver concrete to any monolithic unit of a structure at a rate that will permit proper handling, placing, and finishing of the concrete. Regulate the delivery so that the maximum interval between the placing of batches at the work site does not exceed 20 minutes.

All concrete materials and installation shall comply with the N.C. State Highway Commission's "Standard Specifications for Roads and Structures", January, 2018 as amended.

7. Steel for Reinforcement. All reinforcement steel will fulfill the Standard Specifications for Billet Steel Concrete Reinforcement Bars, Designation A615 of ASTM. Intermediate Grade 60 will be used. Deformations shall be in accordance with ASTM Designation A-305.

All steel will be free from rust, scale, or other coatings which would reduce or destroy the bond when placed in forms and the Contractor will provide such protection as is necessary to ensure that the steel will not be injured during the construction period.

8. Joint Materials. Joint filler, hot applied joint sealer, low modulus silicone sealant, and bond breaker materials shall comply with Section 1028, Joint Materials of the N.C. State Highway Commission's "Standard Specifications for Roads and Structures", January, 2018 as amended.

All joint filler shall be sealed unless otherwise specified by the engineer.

9. Mortar. Unless otherwise provided, cement mortar will be Type M only. Type M mortar will consist of Portland cement and sand mixed in the proportion of one-part cement to two parts sand with not more than 6-1/2 gallons of water per bag of cement. This mixture may be varied to increase workability only by reducing the amount of sand or blending one or more sands. Mortar in which cement has been placed for more than one hour will not be used.

10. Brick. All brick used on the work will be hard, tough, sound clay or shale brick, of first-class quality, thoroughly vitrified and especially suitable to the class of work for which it is to be used. Brick used in manholes shall conform to ASTM Specifications C-216, grade SW.

11. Brick Masonry. All brick masonry will be constructed using Type M mortar and brick as specified.

12. Structural Steel.

a. General. The American Institute of Steel Construction's "Specifications for the Design, Fabrication and Erection of Structural Steel for Building", latest edition, and the American Institute of Steel Construction's "Code of Standard Practice for Steel Buildings and Bridges", latest edition, are hereby made a part of these Specifications to the same extent as if they were written herein, except that they may be amended or superseded by these Specifications or the Drawings.

b. Materials.

(1) Structural steel shall conform to "Specifications for Structural Steel", ASTM A-36, latest edition.

(2) Bolts, nuts, and circular washers - where required - shall conform to the requirements of the latest edition of "Specifications for High-Strength Carbon Steel Bolts for Structural Steel Joints: ASTM A-325 in exposed areas. For buried conditions or when used for sewer components, use 304 Stainless Steel.

(3) Bolt and nut dimensions shall conform to the current requirements of the American National Standards Institute for heavy hex structural bolts and nuts, ANSI Standard B18.2.1.

13. Storm Sewers. Reinforced concrete pipe (RCP) shall conform to AASHTO Specifications M-170, Table III, Class III. High Density Polyethylene (HDPE) double wall corrugated smooth interior drainage pipe shall conform with NCDOT's current "Standard Specifications for Roads and Structures" and AASHTO M-294 Type S for sizes 15" through 48".

HDPE pipe in public applications shall only be used behind the curb and in areas with no vehicular traffic unless HP Storm or approved equal pipe is used.

Storm drain material and pipe class shall be listed on the pipe chart within the construction plans. Any private storm drain conveying water from the public roadway shall be built to City Standards.

14. Catch Basin Frames and Covers. All catch basin frames and covers shall be of cast iron of superior quality, tough and of even grain, and shall possess a tensile strength of not less than 18,000 psi. Dimensions of the ring and cover shall conform to the Construction Details shown on the attached Drawings. All rings and covers shall be thoroughly cleaned and given two coats of an approved bituminous paint.

15. Water Main Materials. Water main materials shall be certified to meet the NSF/ANSI 61 Standard. All hardware to be stainless steel.

16. Ductile Iron Pipe and Fittings. Ductile Iron Pipe shall be manufactured in accordance with ANSI C151/A21.51 of the AWWA as amended and shall be designed for type 2 laying condition with the wall thickness determined by the depth of cover and a working pressure of 150 psi. Pipe wall thickness shall be calculated in accordance with ANSI C150/A21.50.

Joints for ductile iron pipe shall be manufactured in accordance with ANSI C111 or AWWA A21.11, push-on joint or mechanical joint. Flanges, where required shall be ANSI C110 or AWWA 21.10.

Ductile iron fittings through 12" shall be manufactured in accordance with ANSI Specification 21.10. Joints for fittings shall be mechanical joint conforming to ANSI Specification 21.11. Flanged fittings, where required, shall conform to ANSI Specification B16.1.

Pipe and fittings shall have a cement lining in accordance with ANSI Specification 21.4. All hardware to be stainless steel.

D.I. Pipe shall be a minimum Thickness Class 50, unless pressure or depth requires a higher class of pipe.

17. Gate Valves. Gate valves shall be of the resilient wedge type, iron body, bronze mounted, non-rising stem type designed to work equally well with pressure on either side of the gate. All valves shall conform to the requirements of the latest revision of AWWA Standard C-500 for "Gate Valves for Ordinary Water Works Service". The minimum designed working water pressure shall be 175 psi for valves with diameters of 12" or less.

All buried valves shall be supplied with a 2" square operating nut and shall be opened by turning the operating nut in a counterclockwise direction. Ends shall be mechanical joint.

All inside gate valves shall be hand wheel operated with flanged ends.
All gate valves 12" and smaller shall be supplied with double "O" ring seals in lieu of the conventional stuffing box.

Gate valves shall be manufactured by Mueller, Clow, Darling, or equal. All hardware to be stainless steel.

18. Swing Check Valves. Swing check valves shall have weight and lever. Check valves shall have an iron body with bronze seat and disc rings, and shall be approved by Underwriters Laboratories, Inc. Valves shall have a pressure rating of 175 psi and be American-Darling, Clow, or approved equal. All hardware to be stainless steel.

19. Tapping Sleeves. Tapping sleeves shall be of ductile iron, of the split sleeve type with mechanical joint ends, and with a Class 125 outlet flange. The end gaskets shall be Duck-Tipped Rubber Gaskets and all end and side gaskets shall be totally confined to eliminate cold flow. The tapping sleeves shall be as manufactured by American-Darling Valve Company; Clow or approved equal. All hardware to be stainless steel.

20. Tapping Valves. Tapping valves shall be equal in all respects to the gate valves hereinbefore specified except that they shall come equipped with one end having a Class 125 Flange and the other end having a mechanical joint. All hardware to be stainless steel.

21. Valve Boxes. Valve boxes shall be of cast iron conforming to ASTM Specification A048, Class 35. They shall be of the extension type of a pattern approved by the Engineer. Size of valve box shall be suitable for size valve it is to serve and it's bury. Valve boxes shall be as manufactured by James B. Clow Company, or equal, and shall have the word "WATER/SEWER" cast on the top of the lid.

22. Fire Hydrants. Fire hydrants shall be cast iron bodied, fully bronze mounted, suitable for a working pressure of 150 psi and shall conform to the requirements of the latest revision of AWWA Standard C-502 for "Fire Hydrants for Ordinary Water Works Service". Hydrants shall be constructed to permit withdrawal of internal working parts without disturbing the barrel or casing. Main valves, when closed, shall be reasonably tight when upper portion of the barrel is broken off. For water mains less than 12" in size, main valve opening shall be 4-1/2". For water mains 12" and greater in size fire hydrants shall have main valve opening of 5-1/4". The main valve facing shall be made of rubber. There shall be no chattering under any condition of operation. The hydrants shall be of the compression type, with main valve opening against the pressure and closing with the pressure.

Each hydrant shall be equipped with two (2) 2-1/2" hose connection and one (1) pumper connection. Hose nipples shall be bronze or non-corrosive metal. Threads shall be approved by the City prior to placement of order for the hydrants.

Hydrants shall be American Darling or Clow and painted to city standard color scheme. All hardware to be stainless steel.

23. Mechanical Joint Restraint. Mechanical joint restraint shall be wedge style restraint manufactured of ductile iron conforming to ASTM A536-80 such that the device can be used with standardized mechanical joint pipe and conform to ANSI/AWWA A 21.531 C153 and shall be EBAA Iron, Inc., Megalug or Uni Flange Corporation. Mechanical joint restraints shall be installed on all fittings, valves, bends, plugs, and on all pipe sections on hydrant legs.

24. Manhole Rings and Covers. Manhole rings and covers shall be made of cast iron of superior quality, tough and of even grain, and will possess a tensile strength of not less than 18,000 psi. Rings and covers shall be manufactured in accordance with ASTM A-48 Class 30. Rings will weigh not less than 190 lbs., and covers will weigh not less than 120 lbs. The rings will be a maximum of 7 1/2" high and have a minimum opening of 1'-10". See Detail SS-4 for the wording that shall be cast in the covers. The finished rings and covers shall have the bearings surfaces machined or ground so that there will be no variation that will permit rocking or rattling, and the diameter of the covers shall be such as to fit the rings without wedging. All rings and covers will be thoroughly cleaned and given two coats of an approved bituminous paint. Rings shall have a solid cover on street work and perforated on outfalls.

25. Manholes Steps. Steps shall be constructed of a reinforced molded copolymer polypropylene plastic shell. Reinforcing shall be a single ½" steel bar ASTM designation A615 grade 60 and equal in all respects to step PS1-PF as manufactured by M.A. Ind., Inc.

26. Precast Manholes. Precast manholes shall be constructed of reinforced concrete and shall comply with the requirements of ASTM Designation C-478 "PRECAST REINFORCED CONCRETE MANHOLE SECTIONS".

Shop drawings shall be submitted for approval prior to manufacture. Manholes shall be constructed with a monolithic base with the side wall extending at least 48" above the base;

appropriate openings left in the side wall to receive the sewer pipe; barrel or riser sections with a 48" maximum length; and a conical top section having a 24" diameter opening offset in such a manner that the edge of the opening is on a vertical line with the edge of the barrel or riser section.

Manhole steps for precast manholes, unless otherwise approved by the Engineer, shall be as hereinbefore specified and shall be set at a spacing of 16" on centers.

Manhole rings and covers for precast manholes shall be as hereinbefore specified. Precast manholes shall be as constructed by N. C. Products Corporation, Raleigh, North Carolina, or approved equal.

Precast manholes shall be parged w/ non-shrink grout at every joint. Block manholes shall be parged from top to bottom.

27. Small Size Pipe. Small size of (2" to 4") pipe will be as follows: 3" or 4" pipe shall be D.I.P., Class 50 minimum. 2" pipe shall be Type “K”, soft copper.

28. Air Release Valve. Air release valves shall be as manufactured in accordance with ANSI/AWWA C512 by G.A. Industries, Clow Corporation, or equal, of size, number, and location as shown on the Drawings depending on the type of service. All hardware to be stainless steel.

29. Steel Encasement Pipe. Wherever a line must be encased under a highway or railway, it must be encased in a steel pipe that has been manufactured in conformance with the standards of AWWA C-202. Joints, coatings, and method of installation shall be in conformance with the requirements of the N.C. State Highway Commission. In general, the encasement pipe will be installed by boring with an auger so as not to displace material on the outside of the casing.

Manufactured casing spaces shall be used in sufficient quantity to assure proper alignment of the carrier pipe within the encasement pipe. There shall be 3 spacers per joint of carrier pipe with spacing of these spaces not exceeding 9 feet on center. Spacers shall be stainless steel with stainless steel hardware and polymer skids. Spacers shall be Spider Supports and Spacers as manufactured by Spider Manufacturing Inc. or approved equal.

30. Carrier Pipe in Encasement. Wherever a water line or sewer line must be encased under a highway, it shall be of ductile iron as hereinbefore specified and all joints shall be restrained.

31. PVC Gravity Sewer Pipe. PVC (Poly Vinyl Chloride) Gravity Sewer pipe shall be made of PVC plastic conforming to ASTM D-3034 SDR35. Rubber gaskets shall comply in all respects with the physical requirements specified in ASTM D-3212. The bell shall be an integral part of the pipe and the spigot ends shall be supplied from factory with bevels. The Contractor shall furnish the Owner with an affidavit from the manufacturer that the materials furnished comply with these specifications.

32. Sewer Force Mains. Sewer Force Mains 3” or larger in size shall be of Ductile Iron Pipe, Class 50 as hereinbefore specified. For force mains less than 3” in size, the material shall be IPS Pressure rated PVC, minimum pressure Class 200. All hardware to be stainless steel.

33. Aggregate Base Course. The materials used in the construction of the aggregate base course shall comply with Section 520, Aggregate Base Course, of the N.C. State Highway Commission's "Standard Specifications for Roads and Structures", January, 2018 as amended.

34. Asphalt Concrete Binder Course. The materials used in the construction of the bituminous concrete base course shall comply with Section 610, Asphalt Concrete Binder Course - Type I 19.0, of the N.C. State Highway Commission's "Standard Specifications for Roads and Structures", January, 2018 as amended.

35. Asphalt Concrete Surface Course. The materials used in the construction of the bituminous concrete surface course shall comply with Section 610, Asphalt Concrete Surface Course – Type SF 9.5, of the N.C. State Highway Commission's "Standard Specifications for Roads and Structures", January, 2018 as amended.

36. Prime Coat. The prime coat shall comply with Section 600 of the N.C. State Highway Commission's "Standard Specifications for Roads and Structures", January, 2018 as amended.

37. Tack Coat. The tack coat shall comply with Section 605 of the N.C. State Highway Commission's "Standard Specifications for Roads and Structures", January, 2018 as amended.

38. Pavement Replacement.

a. Wherever asphalt type pavement has been ordered by the Engineer or the Owner to be cut and replaced, it shall be replaced with 6" Type I-190B, and 1" thick asphalt concrete surface course in conformance with N.C. State Highway Commission's "Standard Specifications for Roads and Structures", January, 2018 (as amended). If existing asphalt is thicker than 7” then additional I19.0B shall be installed. Any tack coat used shall conform to same standards.

b. Wherever concrete type pavement has been ordered by the Engineer or Owner to be cut and replaced, it shall be replaced with Class A concrete poured 8" thick. All concrete shall be doweled into existing concrete using NCDOT approved epoxy coated dowels. If existing concrete is greater than 8” then match existing depth.

39. Stabilization Stone for Pavement Cuts. The stone used in stabilizing pavement cuts shall conform to the Aggregate Base Course as described in the N.C. State Highway Commission's "Standard Specifications for Roads and Structures", January, 2018 as amended.

40. Stabilization Stone for Ditches. The stone used in stabilizing ditch bottoms, prior to the installation of storm sewer pipe in the said ditch, shall conform to the requirements of Size No. 67 Aggregate as described in the N.C. State Highway Commission's "Standard Specifications for Roads and Structures", January, 2018 as amended.

41. Concrete Curb and Gutter. Concrete used in curb and gutter shall be 3,000 psi concrete as hereinbefore specified.

42. Rip Rap. Rip Rap shall be Class 1 quarry stone as described in Section 1042 of the N.C. State Highway Commission's "Standard Specifications for Roads and Structures", January, 2018 as amended. (Class A & B to be used where specified.)

43. Guarantee. The Contractor shall guarantee that if any materials, equipment or workmanship covered by these Specifications and the accompanying Drawings proves defective within one year after final acceptance, such defects shall be made good by him. The Engineer shall provide a letter to the City indicating the start of the 12-month guarantee period. Provide State required certifications and “As Builts” with guarantee letter.

STREET AND SITE IMPROVEMENTS: DETAILED SPECIFICATIONS FOR INSTALLATION

1. General Provisions
2. Scope of Work
3. Excavation for Storm Sewers
4. Rock Excavation in Trenches
5. Backfilling Trenches
6. Pipe Laying - General Provisions
7. Pipe Laying - Storm Sewers
8. Manholes
9. Catch Basins
10. Grading and Trenching
11. Adjusting Existing Manholes and Valve Boxes to Grade
12. Concrete Curb and Gutter
13. Concrete Driveway Entrances
14. Aggregate Base Course
15. Prime Coat
16. Tack Coat
17. Asphalt Concrete Binder Course
18. Asphalt Concrete Surface Course
19. Stabilization Stone for Ditches
20. Erosion Control
21. Relocation of Hydrants, Water and Sewer Services
22. Existing Pipes, Conduits, and Cables – Care of
23. Responsibility for Damages
24. Signs and Barricades
25. Cleanup
26. Guarantee
27. Geotechnical Testing Requirements

1. General Provisions. The following Specifications cover work which is to be furnished and installed under STREET IMPROVEMENTS and SITE IMPROVEMENTS. Applicable subsections of MATERIAL SPECIFICATIONS apply to all work.

The alignment and grade shall be checked by the City's representative prior to placement of ABC, curb and gutter, and pavement.

Shop drawings for water, sewer, & storm drainage related materials are to be submitted to the City for review approval prior to installation. Additional material specifications may be required at times.

2. Scope of Work. The work to be performed under this document includes the Street Improvements.

3. Excavation for Storm Sewers. All trenches shall be excavated in open cut from the surface and in close conformity to the lines on approved plans.

In order that there be sufficient room for properly laying and jointing the pipe, trench widths shall be a minimum of 24" plus the outside pipe diameter. In order to safeguard the pipe, however, the maximum trench width shall not exceed 36" plus the outside pipe diameter. Trench widths shall be measured between faces of the cut at the top of the pipe.

All pipe shall be laid on a bedding of 6" of No. 67 stone. If HDPE Pipe is installed, provide bedding stone to spring line of pipe or as recommended by the manufacturer.

Length of trench open ahead of pipe laying shall be no more than 300 feet, and no less than 20 feet.

Wet trenches shall be stabilized by the use of No. 67 stone.

The Contractor shall keep all trenches free from water during excavation for pipelines. The water shall be pumped out of the ditch or dams built to keep it out of the ditch in such a manner as not to cause injury to the public health, private property, or the work in progress.

Portable bridges shall be erected across trenches to permit the passage of vehicular and/or pedestrian traffic.

The local Fire Department and 911 shall be notified at least 24 hours before any street is blocked by the opening of a trench. The Fire Department and 911 shall also be notified when the street is once again open to traffic.

Sheeting or bracing shall be used wherever necessary to prevent caving of the trench banks. The removal of sheeting shall be done in such a manner as to minimize the loss of friction between the trench walls and the backfill. Sheeting shall be cut off and left in place where its removal will adversely affect the pipeline installation.

4. Rock Excavation in Trenches. Should rock be encountered in the trenches, the excavation shall be carried to a depth of 6" below the body of the pipe and the trench shall be brought back to grade with No. 67 Stone properly compacted. Suitable backfill material shall be defined as stabilization stone, sand, or native material free from rocks of optimum moisture content in order to obtain a compaction of 95% standard proctor. The use of native material shall be subject to the sole approval of the Engineer or his representative.

Should rock be encountered in the trenches and blasting is required for its removal, then all blasting operations shall be conducted in strict accordance with existing ordinances and accepted safe practices relative to the storage and use of explosives.

No rock excavated from trenches larger than 3" diameter shall be used to backfill such trenches and no rock is allowed in the first 24" above the top of the pipe. The items named for the various sizes and classifications of pipe to be installed shall include the removal and disposal off site of such excavated rock material. The contractor shall secure, haul, and place in the trench sufficient suitable backfill material.

The use of native material shall be subject to the sole approval by the Engineer or his representative.

5. Backfilling Trenches. Trenches shall be filled in layers six inches (6") deep and thoroughly compacted with mechanical compactors to attain 95% standard proctor. Dry material used in refilling shall be sufficiently moistened so that after compacting future settlement will be at a minimum. Flooring will not be permitted and excess water from any cause shall be removed from the ditch. Material left over from the trench shall be hauled away and no extra compensation will be allowed for such disposal. If native soils from the trench are unsuitable to attain a stable, unyielding trench; the contractor shall provide suitable backfill material as defined in paragraph 4. Compaction testing of the backfill shall be provided by a certified testing firm and paid by the contractor. See additional requirements as indicated under Section 10 and 27 of the Street and Site Improvements specifications.

The top twelve inches (12") of all trenches where pavement has been cut, and where directed by the City, shall be backfilled with crushed stone placed in layers six inches (6") deep and thoroughly compacted. This stone shall be Aggregate Base Course stone meeting the requirements of the N. C. State Highway Commission's "Standard Specifications for Roads and Structures", January 1, 2018 (as amended). It shall be the Contractor's responsibility to maintain all pavement cuts until paved or accepted by the Owner.

Wherever pipelines are laid in the shoulders of paved roads, backfilling shall be accomplished in the same manner as hereinbefore described for trenches in paved roads or streets except that the trench shall be filled to its full depth with earth.

6. Pipe Laying - General Provisions. The Contractor shall be responsible for all material which may become a part of the finished work until it is finally in place and accepted by the City, and shall remove from the lines any cracked or defective pipe and shall replace them with new pipe without extra compensation therefor.

Should any pipe be cracked or defective, the Contractor may cut off the cracked or defective portion and lay the remainder of the pipe if, in his opinion, the cutting off of the cracked or defective end will not injure the balance of the pipe. Permitting such cutting off of cracked or defective ends, however, shall not absolve the Contractor from any of his responsibility toward the work.

All pipe will be laid on lines and grades as shown on the approved Drawings. All pipe shall be placed on a firm foundation so as to prevent subsequent settlement.

Upon completion of the work, all lines shall present a clean and unbroken barrel, true to line and grade, and any defective lines shall be repaired, and any deposits removed by the Contractor. The Contractor shall provide a video inspection of all sanitary and storm sewer pipes at completion

of construction and provide a copy of such to the City in DVD format. Any defects detected by such video inspection shall be repaired by the contractor.

7. Pipe Laying - Storm Sewers. All materials for laying and jointing the pipe in the trench shall conform to the specifications for such materials hereinbefore given and shall be furnished by the Contractor.

Pipe shall have full bearing for its full length and be bedded in 6” of #57 stone. RCP Joints shall be sealed with a flexible joint sealant and wrapped with silt tight fabric. Except as modified herein, the installation of the storm sewers shall comply with the requirements of the Department of Transportation’s "Standard Specifications for Roads and Structures". HPDE joints shall be silt free type and HPDE Pipe shall be installed in accordance with ASTM D 2321. RCP shall have the pipe classification stamped on the inside of the pipe such that the pipe classification can be included and identified during the final video inspection.

HDPE pipe in public applications shall only be used behind the curb and in areas with no vehicular traffic unless HP Storm or approved equal pipe is used.

8. Manholes. Manholes shall be made of precast concrete and shall conform to the Construction Details that are a part of the standard details.

Manholes shall be provided with plastic coated steps set in the walls 12" apart, and all manholes shall be capped with cast iron manhole frames and covers. The frames shall be furnished and set in mortar with even bearing.

Concrete precast manholes, as specified in material specifications, shall meet ASTM Designation C-478. Joints shall be sealed, parged with a non-shrink grout, and watertight at completion.

9. Catch Basins. Catch basins shall be built where shown on the approved Plans or where directed by the Engineer and shall conform to the Construction Details that are a part of the Plans. Precast reinforced concrete (4000 psi) structures of size equal to the built-in place basins shall be submitted for approval prior to manufacture.

Catch basins shall be constructed of concrete and brick masonry. Bottoms shall be constructed of Class B Concrete; the walls of brick masonry; and the reinforced concrete top shall be constructed of class A Concrete. The top may be precast or cast in place. Tops are to be smooth with no lift rings cast into the top of the lid. No patching will be allowed to achieve smoothness. Should precast concrete structures be used, no adjustment will be allowed for cutting or sawing the tops of the structures, but masonry can be used for adjustment if needed. Boxes are to have joints sealed with Conseal and parged with a non-shrink grout and bottoms are to be a minimum 6” thick.

10. Grading and Trenching. Scope: All areas designated on site to be either excavated or filled shall be included under this section, including all trench lines for all purposes.

Excavation. All areas shall be graded to subgrade elevations or finish grade (as appropriate) as shown on plans. All excess material shall be removed from the site unless areas for such disposal are designated on the plans.

Backfill and Fill Material. All backfill and fill material shall be suitable to acquire the following density:

Building Areas: ASTM-D-698 98% Standard Proctor

Density - minimum of 3,000 psf. (includes 5' outside building)
Road and Parking and trenches in Right of Way: ASTM-D-698 95% Standard Proctor Density except top 12" - 100% Standard Proctor.
ASTM-D-698 100%. Stone base compacted to 100% Standard Proctor.
SF 9.5B shall be compacted to a minimum of 90% of maximum specific gravity (G_{mm})
S 4.75A shall be compacted to a minimum of 85% of maximum specific gravity (G_{mm})
All other asphalt mixes shall be compacted to a minimum of 92% specific gravity (G_{mm})
General Site Areas (non-structural): ASTM-D-698 90% Standard Proctor Density.

The Contractor will be responsible for testing of site during grading. All areas that do not meet the hereinbefore density test shall be removed and recompacted with acceptable materials at contractors' expense. Copies of compaction test reports shall be provided to the City prior to placement of stone base and prior to pavement placement. See compaction testing requirements under Section 27. Compaction reports should include density as well as moisture content being within +/- 3% of the Proctor.

Should any areas require excavation under subgrade as determined by the soil testing firm, the contractor shall undercut such areas to a depth or bearing determined by the soils engineer.

Clearing and Grubbing. All areas to be excavated or backfilled shall be completely cleared and grubbed of all shrubs, trees, stumps, etc. before excavating and backfilling begins. All debris shall be removed from site in accordance with local codes.

Topsoil. Topsoil shall be stripped from areas to be excavated or backfilled. Excess topsoil can be placed in the slopes outside the shoulders in non-structural areas.

Boulders and Rock Disposal. Boulders and rock, if encountered, will not be permitted to be buried on site unless locations for such disposal have been designated on the plans by the Engineer. All spoil area shall be covered with a minimum of two (2) feet of earth to grades as set by the engineer.

Embankment. Only suitable material approved by the Design Engineer shall be used in the formation of embankments. Prior to construction of embankments, all brush, roots, rubbish, sod, weeds, topsoil and other unsuitable material shall be removed from the natural ground within the limits of the fill. All surfaces upon which an embankment is to be placed shall be thoroughly scarified prior to its placement. Embankment materials shall be deposited and spread in uniform horizontal layers not more than 8" deep. Each layer shall be thoroughly compacted by rolling with approved equipment before starting the next layer. All embankments shall have 95% Standard Proctor compaction to a point five feet beyond edge of pavement or curb and gutter unless shown otherwise on plans. All fill shall be track placed prior to seeding. All embankments shall be protected with temporary slope drains or diversions. Provide guard rails on all roadway embankments higher than 8' in height.

Proof Rolling. The subgrade shall be proofrolled with a 25-ton dual axle truck loaded to the 25-ton specified weight and verified by certified scale measurements. The contractor shall proof roll the subgrade and ABC in the presence of the testing firm and city representative. Any soft areas shall be repaired by the contractor and reproof rolled once repair has been completed.

11. Adjusting Existing Manholes and Valve Boxes to Grade. All existing manholes and valve boxes within the project limits will be located by the City and shown to the contractor. It shall be the Contractor's responsibility to preserve and protect all manhole tops and boxes. The tops and boxes shall be held in place by a concrete collar poured around the castings as detailed on plans (18" from ring and 8" deep). For all projects where the final lift of asphalt is not anticipated prior

to the onset of winter, all manholes and valve boxes are to be adjusted flush with the binder course. The final adjustment to finish grade will not be done until immediately prior to the placement of the final lift of surface course.

12. Concrete Curb and Gutter. All materials required in the construction of the concrete curb and gutter shall conform to the specifications for such materials as hereinbefore given. Class A concrete shall be used and shall be air entrained.

The dimensions and sizes of the concrete curb and gutter shall conform to the details shown in the Construction Details which are a part of the accompanying Plans. The curb and gutter shall be constructed where shown on the Plans. The contractor shall provide expansion joints, construction joints, and handicap access per City requirements.

Except as herein modified, the methods used in the construction of the concrete curb and gutter shall comply with the N.C. State Highway Commission's "Standard Specifications for Road Structures", dated January, 2018 (as amended).

13. Concrete Driveway Entrances. All materials required in the construction of the concrete driveway entrances shall be the same as that specified for concrete curb and gutter.

14. Aggregate Base Course. All materials and methods of construction shall conform to Section 520 of the N.C. State Highway Commission's Standard Specifications for Road Structures, dated January, 2018 (as amended). The compacted thickness of the base course shall be 8" minimum (for residential streets only) unless shown otherwise or required by actual field conditions considering soil type and pavement design analysis prepared by a professional engineer. Copies of all base course delivery tickets shall be made available to the City and the Contractor shall certify that the material has been used in the construction of this project.

All materials shall be as hereinbefore specified.

15. Prime Coat. All materials and methods of construction shall conform to Section 1020 of the N.C. State Highway Commission's "Standard Specifications for Road Structures", dated January, 2018 (as amended). The prime coat shall be applied at the rate of 0.18 - 0.45 gallons per square yard.

16. Tack Coat. All materials and methods of construction shall conform to Section 605 of the N.C. State Highway Commission's "Standard Specifications for Road Structures", dated January, 2018 (as amended). The tack coat shall be applied at the rate of 0.04 - 0.08 gallons per square yard. Tack shall be applied to existing asphalt or concrete surfaces prior to installation of all asphalt concrete courses.

17. Asphalt Concrete Binder Course. All materials and methods of construction shall conform to Section 663, Type I-190B of the N.C. State Highway Commission's "Standard Specifications for Road Structures", dated January, 2018 (as amended). The compacted thickness shall be as on approved plans.

Copies of all binder course delivery tickets shall be made available to the City and the Contractor shall certify that the material has been used in the construction of this project.

Test cores shall be required at a rate of one core sample per 500 feet of roadway, or fraction thereof. A minimum of 2 core samples per roadway are required. Additional testing may be required at Engineer’s request. Regardless of length, at least one random core sample shall be taken for each day of paving. Cores are to be taken in the presence of a City representative.

The City is to be notified 48 hours in advance of cores being taken. The core report is to include the thickness of the core at the time the core is taken and include the thickness of the core when it is tested. The core may be trimmed if required to achieve levelness and at a maximum of ¼ inch. Any core trimmed more than the maximum amount may be discarded by the City resulting in the need for additional cores to be taken.

18. Asphalt Concrete Surface Course. All materials and methods of construction shall conform to Section 663, Type SF 9.5A of the N.C. State Highway Commission's "Standard Specifications for Road Structures", dated January, 2018 (as amended). The compacted thickness of the surface course shall be as shown on approved plans.

Copies of all surface course delivery tickets shall be made available to the City and the Contractor shall certify that the material has been used in the construction of this project.

Prior to the construction of the surface course, a tack coat shall be applied to the binder course. This tack coat shall be applied at the rate of 0.04 to 0.07 gallons per square yard.

No test cores shall be taken on surface course, unless directed by the Engineer.

19. Stabilization Stone for Ditches. The stone used for the stabilization of ditch bottoms shall be as hereinbefore specified. All storm sewers shall be laid on 6" of No. 67 Stone for the full trench width.

20. Erosion Control.

A. Reference to Other Documents. The General Conditions, Supplementary Conditions, Material Specifications, and Detailed Specifications for Installation contain requirements relevant to the work covered by this Section. Clearing and Grubbing, Site Grading, Clearing of rights of ways, excavating and backfilling, and Spoil Disposal will be subject to the applicable requirements of this Section.

B. General Requirements. Control of erosion and sedimentation resulting from land disturbing activities is subject to the requirements of the North Carolina Sedimentation Control Commission. Any authorized representative or agent of the commission shall be granted entry or access for purposes of inspection; he shall not be obstructed, hampered, or interfered with while he is in the process of carrying out his official duties. The requirements for erosion and sedimentation control apply to areas which are involved in borrow, waste disposal, and topsoil storage activities; and to areas which are directly involved with the construction of buildings, paving, curb, gutter, and to areas where storm drainage, water, and sewer lines and structures are installed. No Construction shall take place until erosion control permit is in hand and erosion control devices are installed.

Land disturbing activities shall be planned and carried out to achieve the following objectives:

1) Expose minimum sized areas at any one time
2) Limit exposures of areas to the shortest possible time
3) Control surface water run-off to reduce erosion and sediment loss
4) Hold off-site erosion and sedimentation damage to a minimum

With reference to requirement No. 2, portions of the site on which land disturbing activities have been undertaken, but upon which no further active construction takes place for a period of 15 working days, shall be planted or otherwise provided with a ground cover sufficient to restrain erosion.

The Contractor shall be responsible for maintaining all temporary and permanent erosion and sedimentation measures and facilities until the project is accepted by the City, or until removal of facilities and cessation of control measures is authorized by the Engineer.

C. Work Included. This Section includes the labor, materials, equipment, and related services required for the installation of berms, drainage structures, storm water drains, straw barriers, vegetative covers, and other devices or methods for control of erosion and sedimentation shown on the Drawings or specified herein.

D. Facilities and Measures for Erosion and Sedimentation Control.

1) Phased Construction. The installation of improvements shall be done in phases as specified on the construction drawings.

This phasing of construction will help limit erosion caused during the installation of the improvements and will act as an erosion control measure.

2) Clearing and Grubbing. The Contractor is to clear the entire width of the permanent easement of trees, stumps, shrubs, and brush. The natural vegetative cover is to remain intact until the installation of the line begins, except that which has to be removed during the clearing and grubbing operation. Stumps, brush, and rubbish resulting from the clearing operation shall not be disposed of by placing on adjoining privately owned property unless the Contractor has a written instrument from the property owner. All other spoil is expected to be trucked off to the sanitary landfill for disposal.

3) Rip Rap. Rip Rap shall be installed at locations as shown on plans or as directed by the Engineer, per the NCDENR erosion control manual.

4) Berms. Drainage berms and ditches shall be installed as shown on the Drawings per the NCDENR erosion control manual.

5) Silt Fence. Silt fences shall be installed as shown on the Drawings or when directed by the Engineer, per the NCDENR erosion control manual.

6) Excelsior Matting. Matting shall be installed at location shown on the Drawings and shall be in compliance with "Standards and Specifications for Soil Erosion and Sediment Control" by the Land Quality Section of NCDENR, per the NCDENR erosion control manual.

7) Permanent Vegetative Cover. Prepare seedbed by ripping, chiseling, harrowing or plowing to depth of six inches so as to produce a loose, friable surface. Remove all stones, boulders, stumps or debris from the surface which would prohibit germination or plant growth, per the NCDENR erosion control manual.

Incorporated into the soil 800 to 1,000 pounds of 10-10-10 fertilizer plus 500 pounds of twenty percent (20%) Superphosphate per acre and two tons of dolomitic lime per acre unless soil tests indicate that a lower rate can be used.

Mulch after seeding with 2.0 tons of grain straw per acre and either crimp straw into soil or tack with liquid asphalt at 400 gallons per acre or emulsified asphalt at 300 gallons per acre.

PERMANENT SEEDINGS

PLANTS & MIXTURE	PLANTING RATE/ACRE	PLANTING DATES
TALL FESCUE (LOW MAINTENANCE)	100-150 LBS.	AUG. 15 - OCT. 15 FEB. 15 - MAY 1
TALL FESCUE WATERWAYS AND LAWNS (HIGH MAINTENANCE)	200-250 LBS.	AUG. 15 - OCT. 15 FEB. 15 - MAY 1
BLEND OF TWO TURF-TYPE TALL FESCUES (90%) AND TWO OR MORE IMPROVED KENTUCKY BLUEGRASS VARIETIES (10%) (HIGH MAINTENANCE)	200-250 LBS.	AUG. 15 - OCT. 15 FEB. 15 - MAY 1
TALL FESCUE AND KOBE OR KOREAN LESPEDEZA	100 LBS. & 20-25 LBS.	FEB. 15 - MAY 1 AUG. 15 - OCT. 15
TALL FESCUE AND SERICEA LESPEDEZA	50 LBS. 60 LBS./ACRE	NOV. 1 - FEB. 1 (UNSCARIFIED)
TALL FESCUE AND GERMAN MILLET OR SUNDANGRASS	70 LBS. AND 40 LBS.	JULY AND AUGUST
TALL FESCUE AND RYEGRAIN	70 LBS. AND 25 LBS.	NOV. 1 - JAN. 30
COMMON BERMUDAGRASS	8 LBS. (HULLED) 15-20 LBS. (UNHULLED)	APRIL 15 - JUNE 30 FEB. 1 - MARCH 30

Permanent Seeding Notes:

1. For spring seedlings, use scarified lespedeza seed. For late fall and winter seedings, use unscarified seed.
2. Annuals such as millet, sundangrass and ryegrain must be kept at 10-12" maximum height. The use of annual rye grass is not permitted.

The preceding permanent cover requirements pertain to all areas disturbed during the project construction including road shoulders, temporary access roads, spoil areas, building sites, rights-of-way, easements and line work.

21. Relocation of Hydrants, Water and Sewer Services. The Contractor shall be responsible for and shall move all hydrants, water services and sewer services that require relocation. All relocated utilities shall be inspected by the Engineer unless specified otherwise on plans.

22. Existing Pipes, Conduits, and Cables - Care of. Special care must be exercised by the Contractor, in the installation of all improvements and in passing under or over existing storm sewers, sanitary sewers, water lines, gas lines, and telephone or power conduits or cables. All aforementioned pipes, cables, lines, or structures broken or ruptured by the Contractor must be immediately repaired or replaced by him. Contractor shall contact the appropriate utility locating service or personnel prior to initiating construction.

23. Responsibility for Damages. The Contractor shall be held responsible for all damages claimed, as a result of the installation of this project, to all utility poles, driveways, yards, shrubbery and plantings, drain ditches, and pipes, pavement, sidewalks, water lines, gas lines, telephone or power conduits or cables, buildings, fences, etc.

24. Signs and Barricades. The Contractor shall at his cost provide, erect, maintain, and illuminate, where necessary, all barricades, warning signs and local detour signs required.

25. Cleanup. Upon completion of the work the Contractor shall remove all excess materials, earth, debris, etc., along the line of his work and shall cleanup and leave, in its original condition, all affected private property.

26. Guarantee. The Contractor shall guarantee that if any materials, equipment or workmanship covered by these Specifications and the accompanying Drawings proves defective within one year after final acceptance, such defects shall be made good by him. The Engineer shall provide a letter to the City indicating the start of the 12-month guarantee period. Provide State required certifications and "As Builts" with guarantee letter.

27. Geotechnical Testing Requirements. Section 10 provides the standards for compaction in all streets and trenches. Testing reports shall be submitted to the engineer prior to proceeding to the next phase of construction (i.e. Subgrade tests shall be submitted prior to stone placement). The contractor is responsible for notifying the City 48 hours prior to any testing to allow the City the opportunity to be present during testing if desired. The following is the minimum testing schedule for compaction tests and each test shall be independent of other tests, additional testing may be required at Engineer's request:

A. Sanitary and Storm Sewer Line trenches
   i. If trench 0-8 ft. deep, provide one (1) test at half depth and at subgrade between each manhole.
   ii. If trench over 8 ft. deep, provide one (1) test for each 4 ft. and at subgrade excluding bottom of trench between each manhole. Tests shall be taken at the depths based on the trench depth divided by 4. As an example, for a 12 ft. trench, tests are required at the 4 ft. and 8 ft. depths plus at subgrade (12/4 = 3).
   iii. Services- provide one (1) compaction test for every 5 services.
   iv. Manholes or curb inlets-provide compaction tests for every 5th MH(CI) within 2 ft. of the manhole based on the trench depth as described above.

B. Water Line trenches
   i. One (1) compaction test for every 500 ft. of line at subgrade if water line is less than 4 ft. of cover.
   ii. Services- provide one (1) compaction test for every 5 services.

C. Street Compaction tests
   i. One per 500 ft. of street outside of trench lines. This includes the subgrade, stone testing, and asphalt testing.
   ii. Minimum 2 tests per roadway or one test per 500 ft. of street, whichever is greater.

D. Right of Way tests
   i. Any pit (Bore/Thump) within the Right of Way shall be required to be tested at depths described in A i, and A ii above.

Testing

Testing agency will test compaction of soils in place according to ASTM D 1556, ASTM D 2937, and ASTM D 6938, as applicable.

When testing agency reports that subgrades, fills, or backfills have not achieved degree of compaction specified, scarify and moisten or aerate, or remove and replace soil materials to depth required; recompact and retest until specified compaction is obtained.

Soil Types:
Suitable Soil Classification Groups: GC, ML, SC, CL, GW, GP, GM, SW, SP, and SM according to ASTM D 2487, or a combination of these groups; free of rock or gravel larger than 3 inches in any dimension, debris, waste, frozen materials, vegetation, and other deleterious matter.

1. Liquid Limit: Less than 40, unless otherwise recommended in a site-specific geotechnical report.
2. Plasticity Index: Less than 20, unless otherwise recommended in a site-specific geotechnical report.

Reporting
Testing Agency Qualifications: An agency with the experience and capability to conduct testing and inspecting indicated, as documented by ASTM E 548, and that specializes in types of tests and inspections to be performed.

Daily reports of work performed shall be provided. Reports should include the following:

1. Date of issue.
2. Project title and number.
3. Name, address, and telephone number of testing agency.
4. Dates and locations of samples and tests or inspections.
5. Names of individuals making tests and inspections.
6. Description of the Work and test and inspection method.
7. Identification of product and Specification Section.
8. Complete test or inspection data.
9. Test and inspection results and an interpretation of test results.
10. Ambient conditions at time of sample taking and testing and inspecting.
11. Comments or professional opinion on whether tested or inspected Work complies with the Contract Document requirements.
12. Name and signature of laboratory inspector.
13. Recommendations on retesting and reinspecting.

Testing agency will submit a certified written report of each test, inspection, and similar quality-control service to Owner with copy to Contractor and to authorities having jurisdiction. Reports and tests shall be submitted within 1 week of inspection or test.

WATER LINES: DETAILED SPECIFICATIONS FOR INSTALLATION

1. General Provisions
2. Scope of Work
3. Clearing of Rights-of-Way
4. Excavation for Pipelines
5. Rock Excavation in Trenches
6. Pavement Cutting and Removal
7. Backfilling Trenches
8. Pipe Laying - General Provisions
9. Pipelines Crossing Gravel Drives
10. Pipe Laying - Ductile Iron Water Main
11. Setting Valves and Valve Boxes
12. Setting Fire Hydrants
13. Setting Ductile Iron Fittings
14. Joint Restraint
15. Blowoffs
16. Testing Water Lines
17. Chlorination of Water Lines
18. Connections to Existing Water Mains
19. Pipelines Under State Highway Pavement
20. Pavement Replacement
21. Existing Pipes, Conduits, and Cables - Care of
22. Responsibility for Damages
23. Signs and Barricades
24. Cleanup
25. Erosion Control
26. Bonds and Permits Required by N.C. State Highway Commission
27. Guarantee
28. Testing Notice
29. Damaged Piping

1. General Provisions. The following Specifications cover work which is to be furnished and installed under the document containing water mains. Water main materials shall be certified to meet the NSF/ANSI 61.

2. Scope of Work. The work to be performed under this Contract includes the Water Mains shown on the Drawings complete with all appurtenant items, as shown on the accompanying Plans and as Described in these Specifications.

3. Clearing of Rights-of-Way. Where clearing and grubbing is required, the area to be cleared shall be grubbed of all stumps and shall be left free of all stumps, brush, roots and rubbish resulting from the clearing operation.

4. Excavation for Pipelines. All excavation shall be of one classification regardless of the material encountered, unless a rock clause is included in the supplemental conditions. All trenches shall be excavated in open cut from the surface, except as otherwise provided for herein, and in close conformity to the lines given by the engineer. The contractor shall be responsible for staking water line alignment in streets where curb and gutter will be installed to insure proper alignment and depth.

In order that there be sufficient room for properly laying and jointing the pipe, trench widths shall be a minimum of 24" plus the outside pipe diameter. In order to safeguard the pipe, however, the maximum trench width shall not exceed 36" plus the outside pipe diameter unless approval to the contrary is given by the Engineer. Trench widths will be measured between faces of the cut at the top of the pipe.

Where no special bedding is required, trench bottoms may be machine excavated to slightly above grade and cut down to pipe grade by hand in the fine-grading operation. Should the trench bottom be inadvertently cut below grade, it shall be filled to grade with #67 stone tamped.

Length of trench open ahead of pipe laying shall be no more than 300 feet, and no less than 20 feet unless approval is obtained from the Engineer. Contractor shall open no more trench than can be covered by end of working day.

Wet trenches or those of unstable subgrade shall be stabilized by the use of No. 67 stone.

The Contractor shall keep all trenches free from water during excavation for pipelines. The water shall be pumped out of the ditch or dams built to keep it out of the ditch in such a manner as not to cause injury to the public health, private property, or the work in progress.

Portable bridges shall be erected across trenches, wherever the Engineer deems them necessary to permit the passage of vehicular and/or pedestrian traffic.

The Local Fire Department and 911 shall be notified at least 24 hours before any street is blocked by the opening of a trench. The fire department and 911 shall also be notified when the street is once again open to traffic.

Sheeting or bracing shall be used wherever necessary to prevent caving of the trench banks. The removal of sheeting shall be done in such a manner as to minimize the loss of friction between the trench walls and the backfill. Sheeting shall be cut off and left in place where its removal will adversely affect the pipeline installation.

5. Rock Excavation in Trenches. Should rock be encountered in the trenches, the excavation shall be carried to a depth of 6" below the body of the pipe and the trench shall be brought back to grade with No. 67 stone properly compacted.

Should rock be encountered in the trenches and blasting is required for its removal, then all blasting operations shall be conducted in strict accordance with existing ordinances and accepted safe practices relative to the storage and use of explosives.

No rock excavated from trenches larger than 3" in diameter shall be used to backfill such trenches and no rock is allowed in the first 24" above the top of pipe. The Items named for the various sizes and classification of pipe to be installed shall include the removal and disposal of such excavated rock material. The Contractor shall secure, haul, and place in the trench sufficient suitable backfill material. Suitable backfill material is defined as stabilization stone, sand, or native material free from rocks and of optimum moisture content in order to compact to 95% of standard proctor. The use of native material shall be subject to the sole approval by the Engineer or his representative.

6. Pavement Cutting and Removal. Wherever it becomes necessary to cut pavement, the cuts shall be confined to a maximum width of the nominal pipe diameter plus 24". No pavement shall be cut wider than these Specifications without authorization from the Engineer. All pavement to be removed shall be marked for cutting by chalk line or other acceptable method. After marking, bituminous pavement shall be sawed to its full depth to a neat and true line along the mark. Concrete pavement shall be sawed to a minimum depth necessary for a smooth cut when broken out. All pavement cut shall be removed from the site of the work and shall not be used to backfill trenches.

7. Backfilling Trenches. Trenches shall be filled in layers six inches (6") deep and thoroughly compacted with mechanical compactors to attain 95% standard proctor. Dry material used in refilling shall be sufficiently moistened so that after compacting future settlement will be at a minimum. Flooring will not be permitted and excess water from any cause shall be removed from the ditch. Material left over from the trench shall be hauled away and no extra compensation will be allowed for such disposal. If native soils from the trench are unsuitable to attain a stable, unyielding trench; the contractor shall provide suitable backfill material as defined in paragraph 6. Compaction testing of the backfill shall be provided by a certified testing firm and paid by the contractor. See additional requirements as indicated under Section 10 and 27 of the Street and Site Improvements specifications.

The top twelve inches (12") of all trenches where pavement has been cut, and where directed by the City, shall be backfilled with crushed stone placed in layers six inches (6") deep and thoroughly compacted. This stone shall be Aggregate Base Course stone

meeting the requirements of the N. C. State Highway Commission's "Standard Specifications for Roads and Structures", January 1, 2018 (as amended). It shall be the Contractor's responsibility to maintain all pavement cuts until paved or accepted by the Owner.

Wherever pipelines are laid in the shoulders of paved roads, backfilling shall be accomplished in the same manner as hereinbefore described for trenches in paved roads or streets except that the trench shall be filled to its full depth with earth.

Rock excavated shall not be used to backfill such trenches.

8. Pipe Laying - General Provisions. The Contractor shall be responsible for all material which may become a part of the finished work until it is finally in place, tested and accepted by the City, except as otherwise provided for herein, and shall remove from the lines any cracked or defective pipe or fittings and shall replace them with new pipe or fittings without extra compensation. Great care must be exercised by the Contractor in handling lined pipe so as not to injure the linings. A damaged lining in a piece of pipe or a fitting will be deemed sufficient reason for its rejection by the City.

Should any pipe be cracked or defective, the City may allow the Contractor to cut off the cracked or defective portion and lay the remainder of the pipe if, in the City and the Contractor’s opinion, the cutting off of the cracked or defective end will not injure the balance of the pipe. Permitting such cutting off of cracked or defective ends, however, will not absolve the Contractor from any of his responsibility toward the work. Cutting pipe will only be allowed at ends or with special permission of City staff.

All pipe shall be thoroughly cleaned of earth and rubbish before being placed in the trench, and so kept until final completion and acceptance of the work. Every open end of the pipe shall be securely plugged when pipe laying is not in progress.

All pipe shall be laid on lines and grades as directed by the Engineer and as shown on the Drawings. All pipe shall be placed on a firm foundation so as to prevent subsequent settlement, and the trenches shall be carefully excavated to the proper grade, except where rock excavation is encountered, so that it will be unnecessary to fill in under the pipe. Bell holes shall be provided for all pipe laying modes and special care shall be exercised in obtaining full barrel support.

9. Pipelines Crossing Gravel Drives. Wherever a water line crosses a gravel drive, it shall be backfilled as hereinbefore described in backfilling trenches for crossing paved roads, except the top six inches (6") shall be filled with thoroughly compacted aggregate base course (ABC).

10. Pipe Laying - Ductile Iron Water Main. The installation of ductile iron pipe for water main shall be performed in accordance with the appropriate sections and subsections of AWWA C600. Minimum cover for water mains 8" diameter and smaller shall be 3 feet. Minimum cover for water mains 10" and larger shall be 4 feet. Pipe shall be installed as shown on the Plans and as directed by the Engineer.

Handling of pipe and accessories shall at all times be done in such a manner as to prevent damage to lining of body. All pipe, fittings, valves and hydrants shall be lowered into the trench by approved methods. Under no circumstances shall pipe or accessories be dropped or dumped into the trench.

Pipe shall be swabbed clean before it is laid and any pipe which cannot be cleaned with a swab shall be removed and cleaned with suitable apparatus. Any pipe showing evidence of oil, tar or grease shall be permanently marked and removed from the job and shall not be returned until it has been cleaned to the satisfaction of the Engineer.

Laying of pipe shall be done in accordance with section 7 of AWWA C600, with care being taken to provide uniform bearing for the pipe. The laying of pipe on wood or other blocking will not be permitted. Bell ends shall face direction of laying unless otherwise directed by the Engineer. For lines on an appreciable slope, the Engineer may require that bell ends face upgrade. Bell and spigot of pipe shall be thoroughly cleaned and properly lubricated where a mechanical joint or a "push on" type of joint is employed.

Open ends of pipe shall be plugged with a standard plug or cap at all times when pipe laying is not in progress. Trench water shall not be permitted to enter the pipe.

Pipe cutting, where required, shall be done in a neat and workmanlike manner without damage to the pipe. Pipe cutting shall be done only with equipment especially designed and fabricated for that purpose. The use of chisels and cleavers will not be permitted.

Water mains shall be installed at the locations shown on the Plans or as directed by the Engineer. Separation distances to be field verified prior to backfill.

11. Setting Valves and Valve Boxes. Gate valves shall be set at locations shown on the Plans or as directed by the Engineer. The installation shall be made in accordance with Section 10 of AWWA C600. Each valve shall be equipped with a valve box accurately positioned over the wrench nut. Each valve box shall have a 6" thick x 24" diameter - Class A Concrete collar.

12. Setting Fire Hydrants. Fire Hydrants shall be set at locations shown on the Plans or as directed by the Engineer. In general, hydrants shall be located in a manner to provide complete accessibility and to minimize possibility of damage from vehicles or injury to pedestrians. The installation shall be made in accordance with Section 11 and 12 of AWWA C600 except as amended herein.

Drainage for hydrants shall be in accordance with subsections 11.4 and 11.5 of AWWA C600.

Each hydrant shall be set plumb and shall be restrained from the hydrant tee through the gate valve to the hydrant using mega-lug mechanical joint restraints. All valves installed on hydrant legs shall be securely anchored to the main line tee with mega-lugs.

Before a hydrant is set, it shall be carefully examined, and all dirt and other foreign matter shall be removed from it.

Fire Hydrants shall be on water mains less than 12” in size, main valve opening shall be 4-1/2” with 3-6” bury. For water mains 12” and greater in size fire hydrants shall have main valve opening of 5-1/4” with 4'-6" bury.

Fire hydrants shall be repainted after installation - using paint furnished by hydrant supplier, to the City Standard colors.

13. Setting Ductile Iron Fittings. Ductile iron fittings shall be set at locations shown in the Plans or as directed by the Engineer. The installation of fittings shall be made in accordance with Section 10 of AWWA C600. Special care shall be taken to properly bell-up the joints and to support the body of the fitting. All fittings shall be restrained using mega-lug mechanical joint restraints.

14. Joint Restraint. All cast iron or ductile iron fittings, hydrants, valves, fittings, and other water main components subject to hydrostatic thrust shall be securely restrained by use of mega-lug mechanical joint restraints and appropriately sized concrete reaction blocking. Reaction blocking shall be 3,000 PSI ready mixed concrete. Sakrete type concrete is not allowed. Refer to detail W-26 for restraint distances. All hardware to be stainless steel.

15. Blowoffs. All dead-end water mains, not provided with hydrants reasonably close to such dead ends, shall be equipped with blowoff facilities as provided for in Section 10 of AWWA C-600. Blowoffs shall be installed per details.

16. Testing Water Mains. All utilities (Water, Sanitary Sewer & Storm Sewer) need to be installed, in their entirety, prior to testing. All water mains (including services), before final acceptance shall be tested by filling the main with water, care being taken to expel all air. As a part of this operation, the main to be tested shall be flushed by opening the terminal valve hydrant or blowoff. A temporary tail ditch shall be provided to carry the flushing water to the nearest drain ditch. A pressure of 150 psi shall be applied to the main at the test pump and shall be maintained at that pressure for a minimum period of 2 consecutive hours. All defective material found shall be replaced by the Contractor. All leaking joints shall be made tight. The pipe installation will not be accepted unless and until the leakage, evaluated on the pressure test of 150 psi for a minimum of 2 hours, does not exceed 10.0 gallons per day per mile of pipe per inch of nominal diameter. Test pump drawings shall be approved by Engineer.

In general, the pressure test and the leakage test shall be performed in the manner set forth in Section 13 of AWWA Standard C600, except that the Contractor shall furnish his own pressure gauges. The pressure test and the leakage test shall be performed by the Contractor and witnessed by the City Engineer.

17. Chlorination of Water Mains. All additions to the water system shall be disinfected by chlorination in accordance with ANSI/AWWA C651. After disinfection the water supply shall not be placed into service until bacteriological test results of representative water samples are found to be satisfactory.

Such chlorination must be made under the observation of the Engineer. Chlorination of water mains and Dechlorination of water mains shall be carried out in the following manner:

a. Taps shall be made at the control valve at the upstream end of the line and at all extremities of the line. These taps shall be located in such a manner as to allow HTH solution to be fed into all parts of the main.

b. A solution of water containing high test hypochlorite (70% available chlorine) shall be introduced into the main by regulated pumping at the control valve tap. The solution shall be of such concentration that the water in the main will have at least 50 ppm total chlorine residual immediately after chlorination. The following chart shows the required quantity of 70% HTH compound to be contained in solution in each 1,000-foot section of pipe to produce the desired concentration of 50 ppm:

Pipe Size	Pounds 70% HTH Per 1,000 Ft. of Pipe
6"	0.88
8"	1.56
10"	2.42
12"	3.50

c. The HTH solution shall be circulated in the pipelines by opening the control valve and systematically manipulating hydrants and taps at the main extremities until a uniform concentration has been produced throughout the pipe.

d. The HTH solution shall remain in the main for not less than 24 hours. At the end of this time, the residual chlorine shall be at least 10 ppm. Should the chlorine residual be found to be less than 10 ppm, then the pipelines shall be rechlorinated.

e. Following satisfactory chlorination, the pipelines shall be flushed. Flushing shall continue until only a normal chlorine residual, as determined by the ortho-tolidine test, is present in the water.

f. The Contractor shall be responsible to dechloraminate or dechlorinate any water before it is released to the ground. The Contractor shall use an apparatus that injects or mixes EPA approved chemicals containing one of the following chemicals (absorbic acid, sodium sulfite or sodium thiosulfate) with the discharged water to neutralize the chloramine or chlorine before it is released to the ground. Approved chemicals for use are: (Vita-D-Chlor Tablets, D-Chlor Tablets, No-Chlor Dechlorination Grade Calcium Thiosulfate Solution, or pre-approved equivalent). Approved dechlorination units are: (Pollard Water LPD250 Diffuser with tablet screen, Dechlorination System and Combo Kit, the H20 Neutralizer manufactured by Measurement Technologies, Inc., or pre-approved equivalent), or as directed by the Engineer. Total chlorine residual levels shall be reduced and maintained between a minimum of 1.0 parts per million (1.0mg/l) to a maximum of 4.0 parts per million (4.0mg/l). The Contractor shall test the discharge at 15 minute intervals to insure that acceptable levels of neutralization are maintained. Discharge shall be stopped if chlorine levels exceed 4.0 parts per million (4.0mg/l). The

Contractor under the supervision of the Engineer shall perform the dechloramination and/or dechlorination.

All procedures shall be in accordance with manufacturers recommendations and as approved by the Engineer.

Only in cases where this method is not practical for unique reasons will the City consider allowing the water to be released into the collections system. In those cases, the Contractor will need to make a request at least 48 hours in advance in order for the City to determine the acceptability of the downstream collection facilities.

g. Following the disinfection and flushing of the pipelines and after payment has been made at City Hall for sample fees, samples shall be taken at various points along the line designated by City for bacteriological analyses. City staff will collect samples for bacteriological testing at the State-approved Graham-Mebane Water Treatment Plant. If test results are satisfactory, the pipelines may be certified and then placed into service. If test results are not satisfactory, re-chlorination shall be undertaken at once.

All chlorination of the water system shall be witnessed by the City and performed by the Contractor at no cost to the Owner.

Coordinate all testing and sampling with the City. All water samples must be taken prior to 12 PM (noon) on Wednesday.

18. Connections to Existing Water Mains. Connections to existing water mains shall be made as detailed on the plans, using material hereinbefore specified or as shown on the Drawings. All water connections must be made while under pressure. No connection to existing water main without approval of the City shall be made.

19. Pipelines Under State Highway Pavement. Where shown on the Plans, or as directed by the Engineer, ductile iron water mains shall be installed under State Highway pavement by encasing in a larger pipe. The carrier pipe shall be of restrained joint ductile iron and the encasement pipe shall be steel.

The encasement pipe shall be installed true to line and grade and in conformance with the requirements of the N.C. State Highway Commission. The size of the encasement and carrier pipes will be as shown on the Drawings.

Following the installation of the carrier pipe, the ends of the encasement pipe shall be suitably protected against the entrance of foreign material but shall not be tightly sealed. In general, this may be accomplished by the use of the same stone specified for trench stabilization. The ductile iron carrier pipe shall extend approximately 5.0 feet beyond each end of the encasement pipe.

Pipelines installed under this section shall not be undertaken without the express approval of the appropriate N.C. State Highway Commission's Division Engineer.

20. Pavement Replacement. All pavement cut and removed from publicly maintained roads, streets, or highways as authorized by the Engineer, shall be replaced by the Contractor. Pavement cuts shall be maintained by the Contractor until such time as the pavement has been replaced, but such replacement shall be done as promptly as weather permits. Pavement shall be replaced within 48 hours of being cut. No pavement cuts are allowed on Friday.

21. Existing Pipes, Conduits, and Cables - Care of. Special care must be exercised by the Contractor, in the installation of the lines and improvements, in passing under or over existing storm sewers, sanitary sewers, water lines, gas lines, and telephone or power conduits or cables. All aforementioned lines, cables, conduits, or structures broken or ruptured by the Contractor must be immediately repaired or replaced by him.

22. Responsibility for Damages. The Contractor shall be held responsible for all damages claimed, as a result of the installation of this project, to all utility poles, driveways, yards, shrubbery and plantings, drain ditches, and pipes, pavement, sidewalks, water lines, gas lines, telephone or power conduits or cables, buildings, fences, etc., and will be required to make satisfactory adjustment of all claims arising from the installation of the work contemplated.

23. Signs and Barricades. The Contractor shall provide, erect, maintain, and illuminate, where necessary, all barricades, warning signs and local detour signs required. The contractor shall be held responsible for all damages to the project due to the failure of the signs and barricades to properly protect the work from traffic, pedestrians, animals, and from all other sources.

24. Cleanup. Upon installation of the specified improvements, the Contractor shall remove all excess materials, earth, debris, etc., along the line of his work and shall cleanup and leave, in its original or better condition, all affected property. The contractor shall clean up all work to the point of construction activity not less than weekly.

25. Erosion Control.

A. Reference to Other Documents. The General Conditions, Supplementary Conditions, Material Specifications, and Detailed Specifications for Installation contain requirements relevant to the work covered by this Section. Clearing and Grubbing, Site Grading, Clearing of rights of ways, excavating and backfilling, and Spoil Disposal will be subject to the applicable requirements of this Section.

B. General Requirements. Control of erosion and sedimentation resulting from land disturbing activities is subject to the requirements of the North Carolina Sedimentation Control Commission. Any authorized representative or agent of the commission shall be granted entry or access for purposes of inspection; he shall not be obstructed, hampered, or interfered with while he is in the process of carrying out his official duties. The requirements for erosion and sedimentation control apply to areas which are involved in borrow, waste disposal, and topsoil storage activities; and to areas which are directly involved with the construction of buildings, paving, curb, gutter, and to areas where storm

drainage, water, and sewer lines and structures are installed. No Construction shall take place until erosion control permit is in hand and erosion control devices are installed.

Land disturbing activities shall be planned and carried out to achieve the following objectives:

1) Expose minimum sized areas at any one time
2) Limit exposures of areas to the shortest possible time
3) Control surface water run-off to reduce erosion and sediment loss
4) Hold off-site erosion and sedimentation damage to a minimum

With reference to requirement No. 2, portions of the site on which land disturbing activities have been undertaken, but upon which no further active construction takes place for a period of 15 working days, shall be planted or otherwise provided with a ground cover sufficient to restrain erosion.

The Contractor shall be responsible for maintaining all temporary and permanent erosion and sedimentation measures and facilities until the project is accepted by the City, or until removal of facilities and cessation of control measures is authorized by the Engineer.

C. Work Included. This Section includes the labor, materials, equipment, and related services required for the installation of berms, drainage structures, storm water drains, straw barriers, vegetative covers, and other devices or methods for control of erosion and sedimentation shown on the Drawings or specified herein.

D. Facilities and Measures for Erosion and Sedimentation Control.

1) Phased Construction. The installation of improvements shall be done in phases as specified on the construction drawings.

This phasing of construction will help limit erosion caused during the installation of the improvements and will act as an erosion control measure.

2) Clearing and Grubbing. The Contractor is to clear the entire width of the permanent easement of trees, stumps, shrubs, and brush. The natural vegetative cover is to remain intact until the installation of the line begins, except that which has to be removed during the clearing and grubbing operation. Stumps, brush, and rubbish resulting from the clearing operation shall not be disposed of by placing on adjoining privately owned property unless the Contractor has a written instrument from the property owner. All other spoil is expected to be trucked off to the sanitary landfill for disposal.

3) Rip Rap. Rip Rap shall be installed at locations as shown on plans or as directed by the Engineer per the NC DENR erosion control manual.

4) Berms. Drainage berms and ditches shall be installed as shown on the Drawings per the NC DENR erosion control manual.

5) Silt Fence. Silt fences shall be installed as shown on the Drawings or when directed by the Engineer per the NC DENR erosion control manual.

6) Excelsior Matting. Matting shall be installed at location shown on the Drawings and shall be in compliance with "Standards and Specifications for Soil Erosion and Sediment Control" by the Land Quality Section of NCDENR per the NC DENR erosion control manual.

7) Utility Line Installation. Soil resulting from trench excavation to be used as backfill material shall be placed on the uphill side of the trench. This will prohibit runoff directly into the creek. No excavation shall be placed in the creek or on the bank at any time. Rock encountered during excavation shall be removed from the site and shall not be disposed of by placing on adjoining privately owned property.

8) Permanent Vegetative Cover. Prepare seedbed by ripping, chiseling, harrowing or plowing to depth of six inches so as to produce a loose, friable surface. Remove all stones, boulders, stumps or debris from the surface which would prohibit germination or plant growth per the NC DENR erosion control manual.

Incorporated into the soil 800 to 1,000 pounds of 10-10-10 fertilizer plus 500 pounds of twenty percent (20%) Superphosphate per acre and two tons of dolomitic lime per acre unless soil tests indicate that a lower rate can be used.

Mulch after seeding with 2.0 tons of grain straw per acre and either crimp straw into soil or tack with liquid asphalt at 400 gallons per acre or emulsified asphalt at 300 gallons per acre.

PERMANENT SEEDINGS

PLANTS & MIXTURE	PLANTING RATE/ACRE	PLANTING DATES
TALL FESCUE (LOW MAINTENANCE)	100-150 LBS.	AUG. 15 - OCT. 15 FEB. 15 - MAY 1
TALL FESCUE WATERWAYS AND LAWNS (HIGH MAINTENANCE)	200-250 LBS.	AUG. 15 - OCT. 15 FEB. 15 - MAY 1
BLEND OF TWO TURF-TYPE TALL FESCUES (90%) AND TWO OR MORE IMPROVED KENTUCKY BLUEGRASS VARIETIES (10%) (HIGH MAINTENANCE)	200-250 LBS.	AUG. 15 - OCT. 15 FEB. 15 - MAY 1
TALL FESCUE AND KOBE OR KOREAN LESPEDEZA	100 LBS. & 20-25 LBS.	FEB. 15 - MAY 1 AUG. 15 - OCT. 15
TALL FESCUE AND SERICEA LESPEDEZA	50 LBS. 60 LBS./ACRE	NOV. 1 - FEB. 1 (UNSCARIFIED)

TALL FESCUE AND GERMAN MILLET OR SUNDANGRASS	70 LBS. AND 40 LBS.	JULY AND AUGUST
TALL FESCUE AND RYEGRAIN	70 LBS. AND 25 LBS.	NOV. 1 - JAN. 30
COMMON BERMUDAGRASS	8 LBS. (HULLED) 15-20 LBS. (UNHULLED)	APRIL 15 - JUNE 30 FEB. 1 - MARCH 30

Permanent Seeding Notes:

1. For spring seedlings, use scarified lespedeza seed. For late fall and winter seedings, use unscarified seed.
2. Annuals such as millet, sundangrass and ryegrain must be kept at 10-12" maximum height. The use of annual rye grass is not permitted.

The preceding permanent cover requirements pertain to all areas disturbed during the project construction including road shoulders, temporary access roads, spoil areas, building sites, rights-of-way, easements and line work.

26. Bonds and Permits Required by N.C. State Highway Commission. The Contractor, at his own expense, will secure from the N.C. State Highway Commission, the "Encroachment Agreement" required prior to the installation of that portion of this project that lies within the right-of way of the said Commission. Any or all other bonds and/or permits required by the said Commission in connection with this project shall be provided by the Contractor. This relates especially to the "Permit to Open Pavement" and the performance bond.

27. Guarantee. The Contractor shall guarantee that if any materials, equipment or workmanship covered by these Specifications and the accompanying Drawings proves defective within one year after final acceptance, such defects shall be made good by him. The Engineer shall provide a letter to the City indicating the start of the 12-month guarantee period. Provide State required certifications and “As Builts” with guarantee letter.

28. Testing Notice. Notice to the City, for any testing related to water line work, will be required of the Contractor 48-hours in advance of testing.

29. Damaged Piping. Should any piping be damaged prior to acceptance by the City, the whole joint will be replaced.

SANITARY SEWER LINES: DETAILED SPECIFICATIONS FOR INSTALLATION

1. General Provisions
2. Scope of Work
3. Lines and Grades for Sanitary Sewer Lines
4. Clearing of Rights-of-Way
5. Excavation for Pipelines
6. Rock Excavation in Trenches
7. Pavement Cutting and Removal
8. Backfilling Trenches
9. Pipelines Crossing Gravel Drives
10. Pipe Laying - General Provisions
11. Pipe Laying - Vitrified Clay Pipe
12. Pipe Laying - PVC Sewer Pipe
13. Pipe Laying - Ductile Iron Pipe Sanitary Sewer Mains
14. Precast Concrete Manholes
15. Drop Manholes
16. Connections to Existing Sewage Collection System
17. Testing Sewer Lines and Force Mains
18. Setting Ductile Iron Fittings
19. Joint Restraint
20. Concrete Encasement
21. Cast Iron Soil Pipe Stacks
22. Pipelines Under State Highway Pavement
23. Pavement Replacement
24. Existing Pipes, Conduits, and Cables - Care of
25. Responsibility for Damages
26. Signs and Barricades
27. Cleanup
28. Erosion Control
29. Bonds and Permits Required by N. C. State Highway Commission
30. Guarantee
31. Manhole Testing
32. Video Inspection
33. Testing Notice
34. Damaged Piping

1. General Provisions. The following Specifications cover work which is to be furnished and installed under the document containing Sanitary Sewer Improvements.

2. Scope of Work. The work to be performed under this Contract includes the Sanitary Sewer Improvements shown on the Drawings, complete with all appurtenant items, as shown on the accompanying Plans and as described in these Specifications.

3. Lines and Grades for Sanitary Sewer Lines.

The Contractor shall furnish the following material, equipment, and services:

(a) All intermediate lines, grades, hubs, measurements, etc., required for the actual construction;

(b) Suitable laser equipment for installing the pipe at the indicated grade. Installation by batter boards will not be allowed;

(c) Both a transit and leveling instrument with appurtenances, all meeting the Engineer's approval, shall be kept on the construction site and a person skilled in their operation shall be employed or obtained whenever necessary to give or check elevations, levels, alignment, etc., in the work as the Contractor may need and as the Engineer may request;

(d) Two (2) copies of a daily record of the approximate lineal feet and depth of sewer trench opened per pipe size, the lineal feet of each size of pipe installed at the various incremental pay depths, the number and depth of manholes completed, and the completion of all other pay items. This daily record shall also record the time and location of any blasting. Locations of all work and blasting shown on the daily record shall be identified by station numbers;

4. Clearing of Rights-of-Way. The necessary rights-of-way for all lines crossing privately owned property will be secured by the owner. The permanent and temporary construction easements are of size and location as shown on the drawings. The entire width of the permanent right-of-way shall be cleared by the Contractor to its full width and will be left free of all stumps, brush, roots and rubbish. The temporary construction easement may be cleared in part to aid in the installation of the line.

All clearing operations conducted by the Contractor on the temporary construction easement shall be performed in exactly the same manner as that performed on the permanent easement.

Stumps, brush, roots and rubbish resulting from the clearing operation shall not be disposed of by placing on adjoining privately owned property unless the owner of the property in question approves of such disposal, and the Contractor furnishes the Engineer two (2) copies of a written instrument attesting to the said approval signed by the owner of the property.

5. Excavation for Pipelines. All trenches will be excavated in open cut from the surface, except as otherwise provided for herein, and in close conformity to the lines given by the Engineer.

In order that there be sufficient room for properly laying and jointing the pipe, trench widths shall be a minimum of 24" plus the outside pipe diameter. In order to safeguard the pipe, however, the maximum trench width shall not exceed 36" plus the outside pipe diameter unless approval to the contrary is given by the Engineer. Trench widths will be measured between faces of the cut at the top of the pipe.

Where no special bedding is required, trench bottoms may be machine excavated to slightly above grade and cut down to pipe grade by hand in the fine-grading operation. Should the trench bottom be inadvertently cut below grade, it shall be filled to grade with #67 washed stone tamped.

Length of trench open ahead of pipe laying shall be not more than 300 feet, and no less than 20 feet unless approval is obtained from the City and Engineer. Contractor shall open no more trench than can be covered by end of working day.

Wet trenches or those with unstable subgrade shall be stabilized by the use of No. 67 stone.

The Contractor shall keep all trenches free from water during excavation for pipelines. The water shall be pumped out of the ditch or dams built to keep it out of the ditch in such a manner as not to cause injury to the public health, private property, or the work in progress.

Portable bridges shall be erected across trenches, wherever the City deems them necessary to permit the passage of vehicular and/or pedestrian traffic.

The local Fire Department and 911 shall be notified at least 24 hours before any street is blocked by the opening of a trench. The Fire Department shall also be notified when the street is once again open to traffic. The contractor shall provide all temporary signage and barricades which may be required by the Fire Department or the Department of Transportation.

Sheeting or bracing shall be used wherever necessary to prevent caving of the trench banks. The removal of sheeting shall be done in such a manner as to minimize the loss of friction between the trench walls and the backfill. Sheeting shall be cut off and left in place where its removal will adversely affect the pipeline installation.

6. Rock Excavation in Trenches. Should rock be encountered in the trenches, the excavation shall be carried to a depth of 6" below the body of the pipe and the trench shall be brought back to grade with No. 67 Stone properly compacted. In rock excavation areas, the bedding must be #57 stone. Once bedded, pipe must have a minimum of 6” of #57 stone overtop of the pipe. Suitable backfill material shall be defined as stabilization stone, sand, or native material free from rocks of optimum moisture content in order to obtain a compaction of 95% standard proctor. The use of native material shall be subject to the sole approval of the Engineer or his representative.

Should rock be encountered in the trenches and blasting is required for its removal, then all blasting operations shall be conducted in strict accordance with existing ordinances and accepted safe practices relative to the storage and use of explosives.

No rock excavated from trenches larger than 3" diameter shall be used to backfill such trenches and no rock is allowed in the first 24" above the top of the pipe. The items named for the various sizes and classifications of pipe to be installed shall include the removal and disposal off site of such excavated rock material. The contractor shall secure, haul, and place in the trench sufficient suitable backfill material.

The use of native material shall be subject to the sole approval by the Engineer or his representative.

7. Pavement Cutting and Removal. Wherever it becomes necessary to cut pavement, the cuts shall be confined to a maximum width of the nominal pipe diameter plus 24". No pavement shall be cut wider than the Specifications without authorization from the City. All pavement to be

removed shall be marked for cutting by chalk line or other acceptable method. After marking, bituminous pavement shall be sawed to its full depth to a neat and true line along the mark. Concrete pavement shall be sawed to a minimum depth necessary for the smooth cut when broken out. All pavement cut shall be removed from the site of the work and shall not be used to backfill trenches.

8. Backfilling Trenches. Trenches shall be filled in layers six inches (6") deep and thoroughly compacted with mechanical compactors to attain 95% standard proctor. Dry material used in refilling shall be sufficiently moistened so that after compacting future settlement will be at a minimum. Flooring will not be permitted and excess water from any cause shall be removed from the ditch. Material left over from the trench shall be hauled away and no extra compensation will be allowed for such disposal. If native soils from the trench are unsuitable to attain a stable, unyielding trench; the contractor shall provide suitable backfill material as defined in paragraph 6. Compaction testing of the backfill shall be provided by a certified testing firm and paid by the contractor. See additional requirements as indicated under Section 10 and 27 of the Street and Site Improvements specifications.

The top twelve inches (12") of all trenches where pavement has been cut, and where directed by the City, shall be backfilled with crushed stone placed in layers six inches (6") deep and thoroughly compacted. This stone shall be Aggregate Base Course stone meeting the requirements of the N. C. State Highway Commission's "Standard Specifications for Roads and Structures", January 1, 2018 (as amended). It shall be the Contractor's responsibility to maintain all pavement cuts until paved or accepted by the Owner.

Wherever pipelines are laid in the shoulders of paved roads, backfilling shall be accomplished in the same manner as hereinbefore described for trenches in paved roads or streets except that the trench shall be filled to its full depth with earth.

9. Pipelines Crossing Gravel Drives. Wherever a sewer line crosses a gravel drive, it shall be backfilled as hereinbefore described in backfilling trenches for crossing paved roads, except the top six inches (6") shall be filled with thoroughly compacted ABC Aggregate. It shall be the Contractor's responsibility to maintain all drives until accepted by the City.

10. Pipe Laying - General Provisions. The Contractor shall be responsible for all material which may become a part of the finished work until it is finally in place, tested and accepted by the City, except as otherwise provided for herein, and shall remove from the lines any cracked or defective pipe or fittings.

Great care must be exercised by the Contractor in handling lined pipe so as not to injure the linings. A damaged lining in a piece of pipe or a fitting will be deemed sufficient reason for its rejection by the Engineer.

Should any pipe be cracked or defective, the City may allow the Contractor to cut off the cracked or defective portion and lay the remainder of the pipe if, in the City and Contractor’s opinion, the cutting of the cracked or defective end will not injure the balance of the pipe. Permitting such cutting off of cracked or defective ends, however, will not absolve the Contractor from any of his responsibility toward the work. Cutting of pipe shall only be done at the end of the pipe unless special permission is given by the City.

Pipe must be of uniform material for gravity sewers between manholes. Change in material is only allowed at manholes.

All pipe shall be thoroughly cleaned of earth and rubbish before being placed in the trench and so kept until final completion and acceptance of the work. Every open end of the pipe shall be securely plugged when pipe laying is not in progress.

All pipe shall be thoroughly flushed and cleaned after installation but prior to acceptance. All connections to existing lines or manholes shall be plugged to prevent mud and water from entering the existing system during construction.

All pipe shall be laid on lines and grades as directed by the Engineer and as shown on the Drawings. All pipe shall be placed on a firm foundation so as to prevent subsequent settlement, and the trenches will be carefully excavated to the proper grade, except where rock excavation is encountered, so that it will be unnecessary to fill in under the pipe. Bell holes shall be provided for all pipe laying modes and special care shall be exercised in obtaining full barrel support.

Trace wire shall be installed on all gravity sewers, services, and force mains that are of material other than Ductile Iron. Trace wire shall be 12-gauge minimum solid copper with thermoplastic insulation recommended for direct burial. Trace wire shall be installed along the entire length of the sewer, service, or force main and should terminate in manholes, cleanouts, valve boxes, and/or in test boxes. Trace wire shall be tested by the contractor and witnessed by the City after backfilling. Any areas that are not detectable shall be repaired at no cost to the City.

11. Pipe Laying – Vitrified Clay Pipe. Vitrified clay pipe may only be installed with special permission of the City. All materials for laying and jointing the pipe in the trench shall conform to the specifications for such materials hereinbefore given and will be furnished by the Contractor. Grade lines for aligning and grading the pipe in the trench will be established by the Engineer, and all material and labor required will be furnished by the Contractor.

Previous to being lowered into the trench, each pipe shall be inspected by the pipe foreman, and faulty pipe rejected and removed from the work. No pipe shall be laid in the trench until the Engineer has been notified of the intention of the Contractor to lay pipe, giving the Engineer sufficient time to check the lines and grades before pipe laying is begun. The Contractor shall notify the Engineer at least three days before work is to begin.

Extra strength Vitrified Clay Pipe, as hereinbefore specified, shall be used regardless of the depth of trench in which it is to be installed.

Class “B” Bedding shall be used in trench depths between 0 feet and 24 feet. All pipe installed in trenched greater than 24 feet shall be installed using Class “A” Bedding.

Upon completion of the work, all lines shall present a clean and unbroken barrel, true to line and grade, and any defective lines shall be repaired, and any deposits removed by the Contractor at his own expense.

12. Pipe Laying - PVC Sewer Pipe. PVC gravity sewer pipe shall be installed using a minimum Class "B" bedding as shown on the plans with a select backfill material to the springline of the pipe. Minimum cover over PVC sewer pipe shall be 3-feet to any subgrade elevation.

Select backfill material is defined as stabilization stone (Size No. 67)

PVC Sewer Pipe shall be installed in accordance with ASTM D221 - Standard Recommended Practice for Underground Installation for Flexible Thermoplastic Sewer Pipe. PVC Sewer Pipe shall be tested by the contractor for deflection. The pipe shall be mandrelled with a rigid device

sized to be cylindrical in shape and constructed with 9 to 10 evenly spaced arms. The mandrel shall be hand pulled by the contractor through all sewer lines. Any sections of sewer not passing the mandrel shall be uncovered and the contractor shall reround or replace the sewer and retest that section of line. The contractor shall submit mandrel drawings and testing schedule to the engineer for approval. The mandrel shall be sized for a 5% deflection allowance.
Previous to being lowered into the trench, each pipe shall be inspected by the pipe foreman, and faulty pipe rejected and removed from the work. No pipe shall be laid in the trench until the Engineer has been notified of the intention of the Contractor to lay pipe, giving the Engineer sufficient time to check the lines and grades before pipe laying is begun. The Contractor shall notify the Engineer at least three days before work is to begin.

All PVC sanitary sewer services shall be placed in stone bedding.

13. Pipe Laying - Ductile Iron Pipe Sanitary Sewer Mains. Wherever, in the laying of sanitary sewer lines, the pipe must be supported on piers, where the pipe crosses surface waters, under a highway that cannot be open cut, in shallow trenches where insufficient cover conditions exist, or in deep trenches with excess of 12-feet of cover, the Sanitary sewer lines shall be of ductile iron pipe. The material for laying and jointing the pipe shall conform to the specifications hereinbefore given for Ductile Iron Pipe. The ductile iron will be paid for at the unit price bid for the different sizes of pipe installed in the various pipe laying conditions. Force mains shall be of size and type as shown on the drawings and shall be installed in conformance to "Pipe Laying - General Provisions".

Previous to being lowered into the trench, each pipe shall be inspected by the pipe foreman, and faulty pipe rejected and removed from the work. No pipe shall be laid in the trench until the Engineer has been notified of the intention of the Contractor to lay pipe, giving the Engineer sufficient time to check the lines and grades before pipe laying is begun. The Contractor shall notify the Engineer at least three days before work is to begin.

All ductile iron pipe gravity sewer shall have a stone bedding placed under pipe.

14. Precast Concrete Manholes. Precast concrete manholes shall be built where shown on the plans or as directed by the Engineer. The inside diameter of the manholes shall be at least four feet (4'). Inverts will be built up to a depth of three-quarters (3/4) of the diameter of the pipeline as directed to properly take care of the flow through the manholes and to ease the drop from one pipe to the other. Benches shall be sloped for drainage, as shown of the Plans. Manholes shall be provided with flexible sleeves sealed with stainless steel bands at each pipe entering or exiting a manhole.

Joints between sections of the precast manhole shall be sealed with a Neophrene "O" Ring Gasket and bitumastic rope. Manholes shall be bedded on layer of crushed stone. The stone shall be the same as that specified for stabilizing ditches (Size No. 67) and shall be spread in a layer at least six inches (6") thick.

The manholes shall be capped with cast iron manhole frames and covers with the frames set in mortar with even bearing. The C.I. Frame shall be anchored to the manhole wall as shown on the plans. Manhole installed in asphalt will have 2’ concrete collar surrounding cast-iron frame. After completion, all manholes will be cleaned out and left in a neat condition with all jointing material protruding from joints shall be removed. All riser joints shall be parged with non-shrink grout. Any infiltration into the manhole will not be allowed.

15. Drop Manholes. Drops in manholes greater than 6” but less than or equal to 30”, indicate a concrete slide. If the drop exceeds 30” provide an outside drop manhole. The outside drop

manhole shall have a special drop pipe built into the manhole. This drop shall consist of a T-branch in the main sewer where it enters the manhole and a vertical drop pipe down the side of the manhole and supported therefrom and terminating at the bottom by a quarter bend into the manhole. All piping and fittings shall be of restrained joint ductile iron pipe with mega-lugs.

Drop pipe shall be Ductile Iron Pipe and fittings strapped to manhole wall with 1" stainless steel straps and masonry anchor bolts.

16. Connections to Existing Sewage Collection System. Connections to existing sewage collection systems shall be made where shown on the Plans or as directed by the Engineer. Where the connection is made at an existing manhole, it will be necessary to reconstruct the existing invert(s) to accommodate the new line.

In-line sewer connections are to be made with Romac saddles or approved equal.

No connection to existing manholes or sewer lines shall be made until remaining project construction has been completed and tested.

17. Testing Sewer Lines and Force Mains. All utilities (Water, Sanitary Sewer & Storm Sewer) need to be installed prior to testing. After the sewer lines are completed, but prior to their acceptance and before any sewage is permitted to enter, the following test shall be made by the Contractor to determine the watertightness of the lines, including the manholes. The Engineer will determine whether the test to be made shall be for infiltration or exfiltration. If ground conditions are such that an infiltration test would give no significant results, then an exfiltration test shall be made in the manner hereinafter described. The sewer line shall be filled with water to a level equal to the top of the lowest manhole in the section to be tested. At no point in the sewer line shall the head of the pipe reach more than 10 feet of water. The test will not be deemed conclusive, however, unless the head on the pipe reaches at least 3 feet of water at the upper end of the section being tested. Tests shall be run on the lines in separate sections so that the head on the pipe is at least 3 feet of water but does not exceed 10 feet.

Under the exfiltration method the line shall be tested for six hours (6) after filling and the leakage will be carefully measured. Allowable leakage shall be 100 gallons per inch of internal diameter per mile of pipe per 24 hours. If the leakage exceeds this limit the line shall be drained, repaired, and retested. The manholes shall be included in the test.

In the event the Engineer elects to test the sewer line by the infiltration method, the allowable infiltration shall be 10 gallons per inch of internal diameter per mile of pipe per 24 hours. If the infiltration exceeds this limit, the line shall be repaired and retested.

All sewer lines must pass the test requirements prior to their acceptance by the City. Excessive leakage or infiltration in any one section shall be corrected even through the total may come within the allowable limits.

Force mains shall be tested in the manner set forth in Section 13 of AWWA Standard C600, except the Contractor shall furnish his own gauges and perform the test at no cost to the Owner. Before final acceptance, the force main shall be filled with water, care being taken to expel all air.

A pressure test of 150 psi shall be applied to the line at the test pump and shall be maintained at that pressure for a minimum period of two consecutive hours.

All defective material found shall be replaced by the Contractor. All leaking joints shall be made tight. The pipe installation will not be accepted unless and until leakage, evaluated on the pressure test of 150 psi for 2 hours, does not exceed 10.0 gallons per day per mile of pipe per inch of nominal diameter. The contractor has the option of using an air test method in lieu of the exfiltration method in testing the sewer line. The following requirements apply.

Air Test:

Low-Pressure Air Test for Sanitary Sewers:

*Introduction - Numerous laboratory and field air tests have been devised over the years since the early 1960's. Much of the information contained in these tests was utilized by the American Society for Testing and Materials (ASTM) when preparing ASTM C828, a low-pressure air test for sanitary sewers.

Described below is the procedure for air testing sewer lines to demonstrate the integrity of the installed material and the construction methods.

*Summary of Method - The section of the sewer line to be tested is plugged. Low-pressure air is introduced into the plugged line. The amount and rate of air loss is used to determine the acceptability of the section being tested.

*Preparation of the Sewer Line - Flush and clean the sewer line prior to testing, thus serving to wet the pipe surface as well as clean out any debris. A wetted interior pipe surface will produce more consistent results. Plug all pipe outlets to resist the test pressure. Give special attention to stoppers and laterals. Testing to include all completed sewers including sewer services if included as a part of the work.

*Procedures - Determine the test duration for the section under test by computation from the applicable equations shown in ASTM C828, or from prepared air test tables. The pressure-holding time is based on an average holding pressure of 3 psi (21 kPa) gage or a drop from 3.5 psi (24 kPa) to 2.5 psi (17 kPa) gage.

Add air until the internal air pressure of the sewer line is raised to approximately 4.0 psi (28 kPa) gage. After an internal pressure of approximately 4.0 psig is obtained, allow time for the air pressure to stabilize. The pressure will normally show some drop until the temperature of the air in the test section stabilizes.

When the pressure has stabilized and is at or above the starting test pressure of 3.5 psi (24 kPa) gage, commence the test. Before starting the test, the pressure may be allowed to drop to 3.5 psig. Record the drop in pressure for the test period. If the pressure has dropped more than 1.0 psi (7 kPa) gage during the test period, the line is presumed to have failed. The test may be discontinued when the prescribed test time has been completed even though the 1.0 psig drop has not occurred.

*Safety - The air test may be dangerous if, because of lack of understanding or carelessness, a line is improperly prepared.

It is extremely important that the various plugs be installed and braced in such a way as to prevent blowouts. Inasmuch as a force of 250 lb. (1112N) is exerted on an 8-in. (203-mm) plug by an internal pipe pressure of 5 psi (34 kPa), it should be realized that sudden expulsion of a poorly installed plug or of a plug that is partially deflated before the pipe pressure is released can be dangerous.

As a safety precaution, pressurizing equipment may include a regulator or relief valve set at perhaps 10 psi (69 kPa) to avoid over-pressurizing and damaging an otherwise acceptable line. No one shall be allowed in the manholes during testing.

*Table - The air test table below has been prepared utilizing applicable equations from ASTM C828. It is based on an allowable air loss of 0.003 $ft^3/min \cdot ft^2$ of internal pipe surface, a maximum air loss per test section of 3.5 ft^3/min and a minimum significant air loss per test section of 2.0 ft^3/min. (Test sections of such length that an air loss of 3.5 ft^3/min would be exceeded using the allowable loss of air per square foot of internal pipe surface may be tested in segments where total air loss would be between 2.0 and 3.5 ft^3/min.). It applies when testing one pipe diameter only and for convenience ignores 4" and 6" lateral sewers, which in most instances create only insignificant differences in test time.

AIR TEST TABLE
Based on Equations from ASTM C828
SPECIFICATION TIME (min:sec) REQUIRED FOR PRESSURE DROP FROM 3-1/2 TO 2-1/2 PSIG
WHEN TESTING ONE PIPE DIAMETER ONLY
PIPE DIAMETER, INCHES

LENGTH OF LINE, FEET	4	6	8	10	12	15	18	21	24
25	0:04	0:10	0:18	0:28	0:40	1:02	1:20	2:01	2:38
50	0:09	0:20	0:35	0:55	1:19	2:04	2:58	4:03	5:17
75	0:13	0:30	0:53	1:23	1:59	3:06	4:27	6:04	7:55
100	0:18	0:40	1:10	1:50	2:38	4:08	5:56	8:05	10:34
125	0:22	0:50	1:28	2:18	3:18	5:09	7:26	9:55	11:20
150	0:26	0:59	1:46	2:45	3:58	6:11	8:30	-	-
175	0:31	1:09	2:03	3:13	4:37	7:05	-	-	-
200	0:35	1:19	2:21	3:40	5:17	-	-	-	12:06
225	0:40	1:29	2:38	4:08	5:40	-	-	10:25	13:36
250	0:44	1:39	2:56	4:35	-	-	8:31	11:35	15:07
275	0:48	1:49	3:14	4:43	-	-	9:21	12:44	16:38
300	0:53	1:59	3:31	-	-	-	10:12	13:53	18:09
350	1:02	2:19	3:47	-	-	8:16	11:54	6:12	21:10
400	1:10	2:38	-	-	6:03	9:27	13:36	18:31	24:12
450	1:19	2:50	-	-	6:48	10:38	15:19	20:50	27:13
500	1:28	-	-	5:14	7:34	11:49	17:01	23:09	30:14

18. Setting Ductile Iron Fittings. Ductile iron fittings shall be set at locations shown in the Plans or as directed by the Engineer. The installation of fittings shall be made in accordance with Section 10 of AWWA C600. Special care shall be taken to properly bell-up the joints and to support the body of the fitting. All fittings shall be restrained using mega-lug mechanical joint restraints.

19. Joint Restraint. All cast iron or ductile iron fittings, valves, and other sewer main components subject to hydrostatic thrust shall be securely restrained by use of mega-lug mechanical joint restraints and appropriately sized concrete reaction blocking. Reaction blocking shall be 3,000 PSI ready mixed concrete. Sakrete type concrete is not allowed.

20. Concrete Encasement. Wherever in the laying of the sanitary sewer line the pipe is in a shallow trench where insufficient cover conditions exist, or where shown on the Drawings, or as directed by the Engineer, the pipe shall be completely encased in Class "C" concrete. This encasement shall conform to the typical section shown on the drawings. Delivery tickets on the concrete thus shall be turned in to the Engineer no later than the following working day after delivery was made.

21. Cast Iron Soil Pipe Stacks. The cast iron soil pipe stacks shall be installed where shown on the Drawings and to material specifications as hereinbefore specified.

The stack shall be installed as detailed on the Drawings. Care must be taken to properly tamp the earth around stack as the pipe is laid.

The concrete pad is to be poured on undisturbed soil under the 1/4 bend to size as detailed on the Drawings.

22. Pipelines Under State Highway Pavement. Where shown on the Plans, or as directed by the Engineer, ductile iron sewer mains shall be installed under State Highway pavement by encasing in a larger pipe. The carrier pipe shall be of restrained joint ductile iron and the encasement pipe shall be of steel.

The encasement pipe shall be installed true to line and grade and in conformance with the requirements of the N. C. State Highway Commission. The size of the encasement and carrier pipes shall be as shown on the Drawings.

Following the installation of the carrier pipe, the ends of the encasement pipe shall be suitably protected against the entrance of foreign material but shall not be tightly sealed. In general, this may be accomplished by the use of the same stone specified for trench stabilization. The ductile iron carrier pipe shall extend approximately 5.0 feet beyond each end of the encasement pipe.

Pipelines installed under this Section shall not be undertaken without the express approval of the appropriate N. C. State Highway Commission's Division Engineer.

23. Pavement Replacement. All pavement cut and removed from publicly maintained roads, streets or highways as authorized by the Engineer, shall be replaced by the Contractor. Pavement cuts shall be maintained by the Contractor until such time as the pavement has been replaced, but such replacement shall be done as promptly as weather permits. Pavement shall be replaced within 48 hours after being cut. No pavement cuts are allowed on Friday.

24. Existing Pipes, Conduits and Cables - Care of. Special care must be exercised by the Contractor, in the installation of the storm sewers, in passing under or over existing storm sewers, sanitary sewers, water lines, gas lines and telephone or power conduits or cables. All aforementioned structures broken or ruptured by the Contractor must be immediately repaired or replaced by him. It shall be the contractor's responsibility to verify the location of all underground lines before construction.

25. Responsibility for Damages. The Contractor shall be held responsible for all damages claimed, as a result of the installation of this project, to all utility poles, driveways, yards, shrubbery and planting, drain ditches and pipes, pavement, sidewalks, water lines, gas lines, telephone or power conduits or cables, buildings, fences, etc., and will be required to make satisfactory adjustment of all claims arising from the installation of the work contemplated in this contract prior to final settlement.

26. Signs and Barricades. The Contractor shall provide, erect, maintain and illuminate, where necessary, all barricades, warning signs and local detour signs required. The Contractor shall be held responsible for all damages to the project due to the failure of the signs and barricades to properly protect the work from traffic, pedestrians, animals, and from all other sources. Signs and barricades shall comply with Manual on Uniform Traffic Control Devices for Streets and Highways as amended by the N. C. Department of Transportation.

27. Cleanup. Upon installation of the specified improvements, the Contractor shall remove all excess materials, earth, debris, etc., along the line of his work and shall cleanup and leave, in its original or better condition, all affected property. The contractor shall clean up all work to the point of construction activity not less than weekly.

28. Erosion Control.

A. Reference to Other Documents. The General Conditions, Supplementary Conditions, Material Specifications, and Detailed Specifications for Installation contain requirements relevant to the work covered by this Section. Clearing and Grubbing, Site Grading, Clearing of rights of ways, excavating and backfilling, and Spoil Disposal will be subject to the applicable requirements of this Section.

B. General Requirements. Control of erosion and sedimentation resulting from land disturbing activities is subject to the requirements of the North Carolina Sedimentation Control Commission. Any authorized representative or agent of the commission shall be granted entry or access for purposes of inspection; he shall not be obstructed, hampered, or interfered with while he is in the process of carrying out his official duties. The requirements for erosion and sedimentation control apply to areas which are involved in borrow, waste disposal, and topsoil storage activities; and to areas which are directly involved with the construction of buildings, paving, curb, gutter, and to areas where storm drainage, water, and sewer lines and structures are installed. No Construction shall take place until erosion control permit is in hand and erosion control devices are installed.

Land disturbing activities shall be planned and carried out to achieve the following objectives:

1) Expose minimum sized areas at any one time
2) Limit exposures of areas to the shortest possible time
3) Control surface water run-off to reduce erosion and sediment loss
4) Hold off-site erosion and sedimentation damage to a minimum

With reference to requirement No. 2, portions of the site on which land disturbing activities have been undertaken, but upon which no further active construction takes place for a period of 15 working days, shall be planted or otherwise provided with a ground cover sufficient to restrain erosion.

The Contractor shall be responsible for maintaining all temporary and permanent erosion and sedimentation measures and facilities until the project is accepted by the City, or until removal of facilities and cessation of control measures is authorized by the Engineer.

C. Work Included. This Section includes the labor, materials, equipment, and related services required for the installation of berms, drainage structures, storm water drains, straw barriers, vegetative covers, and other devices or methods for control of erosion and sedimentation shown on the Drawings or specified herein.

D. Facilities and Measures for Erosion and Sedimentation Control.

1) Phased Construction. The installation of improvements shall be done in phases as specified on the construction drawings.

This phasing of construction will help limit erosion caused during the installation of the improvements and will act as an erosion control measure.

2) Clearing and Grubbing. The Contractor is to clear the entire width of the permanent easement of trees, stumps, shrubs, and brush. The natural vegetative cover is to remain intact until the installation of the line begins, except that which has to be removed during the clearing and grubbing operation. Stumps, brush, and rubbish resulting from the clearing operation shall not be disposed of by placing on adjoining privately owned property unless the Contractor has a written instrument from the property owner. All other spoil is expected to be trucked off to the sanitary landfill for disposal.

3) Rip Rap. Rip Rap shall be installed at locations as shown on plans or as directed by the Engineer per the NC DENR erosion control manual.

4) Berms. Drainage berms and ditches shall be installed as shown on the Drawings per the NC DENR erosion control manual.

5) Silt Fence. Silt fences shall be installed as shown on the Drawings or when directed by the Engineer per the NC DENR erosion control manual.

6) Excelsior Matting. Matting shall be installed at location shown on the Drawings and shall be in compliance with "Standards and Specifications for Soil Erosion and Sediment Control" by the Land Quality Section of NCDENR per the NC DENR erosion control manual.

7) Utility Line Installation. Soil resulting from trench excavation to be used as backfill material shall be placed on the uphill side of the trench. This will prohibit runoff directly into the creek. No excavation shall be placed in the creek or on the bank at any time. Rock encountered during excavation shall be removed from the site and shall not be disposed of by placing on adjoining privately owned property.

8) Permanent Vegetative Cover. Prepare seedbed by ripping, chiseling, harrowing or plowing to depth of six inches so as to produce a loose, friable surface. Remove all stones, boulders, stumps or debris from the surface which would prohibit germination or plant growth per the NC DENR erosion control manual.

Incorporated into the soil 800 to 1,000 pounds of 10-10-10 fertilizer plus 500 pounds of twenty percent (20%) Superphosphate per acre and two tons of dolomitic lime per acre unless soil tests indicate that a lower rate can be used.

Mulch after seeding with 2.0 tons of grain straw per acre and either crimp straw into soil or tack with liquid asphalt at 400 gallons per acre or emulsified asphalt at 300 gallons per acre.

PERMANENT SEEDINGS

PLANTS & MIXTURE	PLANTING RATE/ACRE	PLANTING DATES
TALL FESCUE (LOW MAINTENANCE)	100-150 LBS.	AUG. 15 - OCT. 15 FEB. 15 - MAY 1
TALL FESCUE WATERWAYS AND LAWNS (HIGH MAINTENANCE)	200-250 LBS.	AUG. 15 - OCT. 15 FEB. 15 - MAY 1
BLEND OF TWO TURF-TYPE TALL FESCUES (90%) AND TWO OR MORE IMPROVED KENTUCKY BLUEGRASS VARIETIES (10%) (HIGH MAINTENANCE)	200-250 LBS.	AUG. 15 - OCT. 15 FEB. 15 - MAY 1
TALL FESCUE AND KOBE OR KOREAN LESPEDEZA	100 LBS. & 20-25 LBS.	FEB. 15 - MAY 1 AUG. 15 - OCT. 15
TALL FESCUE AND SERICEA LESPEDEZA	50 LBS. 60 LBS./ACRE	NOV. 1 - FEB. 1 (UNSCARIFIED)
TALL FESCUE AND GERMAN MILLET OR SUNDANGRASS	70 LBS. AND 40 LBS.	JULY AND AUGUST
TALL FESCUE AND RYEGRAIN	70 LBS. AND 25 LBS.	NOV. 1 - JAN. 30
COMMON BERMUDAGRASS	8 LBS. (HULLED) 15-20 LBS. (UNHULLED)	APRIL 15 - JUNE 30 FEB. 1 - MARCH 30

Permanent Seeding Notes:

1. For spring seedlings, use scarified lespedeza seed. For late fall and winter seedings, use unscarified seed.
2. Annuals such as millet, sundangrass and ryegrain must be kept at 10-12" maximum height. The use of annual rye grass is not permitted.

The preceding permanent cover requirements pertain to all areas disturbed during the project construction including road shoulders, temporary access roads, spoil areas, building sites, rights-of-way, easements and line work.

29. Bonds and Permits Required by N. C. State Highway Commission. The Contractor, at his own expense, will secure from the N. C. State Highway Commission, the "Encroachment Agreement" required prior to the installation of that portion of this project that lies within the right of way of the said Commission. Any or all other bonds and/or permits required by the said Commission in connection with this project shall be provided and paid for by the Contractor. This relates especially to the "Permit to Open Pavement" and the performance bond.

30. Guarantee. The Contractor shall guarantee that if any materials, equipment or workmanship covered by these Specifications and the accompanying Drawings proves defective within one

year after final acceptance, such defects shall be made good by him. The Engineer shall provide a letter to the City indicating the start of the 12-month guarantee period. Provide State required certifications and “As Builts” with guarantee letter.

31. Manhole Testing. This section is to supplement the manhole specifications. All manholes shall be tested using either the exfiltration test or vacuum test as specified below. Manholes shall be tested by plugging the inlet and outlet lines with airtight plugs prior to performing the manhole test.

a. Exfiltration: Fill the manhole to the rim with water and allow the level to equalize due to saturation.

Refill the manhole and mark the level to begin the test. The test shall last at least 2 hours and allowable leakage shall be 3 gallons per hour. Manholes that fail the test shall be repaired as necessary and retested until they pass.

b. Vacuum Air: The manhole shall be sealed at the top of the rim with the test rig and shall have 10-inches of mercury applied through the rig. The time for the mercury to drop from 10-inches to 9-inches shall be measured. The minimum test time for the specified drop shall not be less than that shown in the following table. All manholes on the project shall be tested. If any manhole fails, it shall be repaired as necessary and retested until it passes.

Manhole Depth	Diameter of Manhole		
	48” Ø	60” Ø	72” Ø
≤ 10 ft.	60 sec.	75 sec.	90 sec.
> 10 ft. but < 15 ft.	75 sec.	90 sec.	105 sec.
> 15 ft.	90 sec.	105 sec.	120 sec.

32. Video Inspection. All sewers and sewer services shall be video inspected by the Contractor and a copy of such video delivered to the City in DVD format. Prior to the video of the sewers, all lines shall be pressured cleaned and flushed and the contractor shall pour 5 gallons of water down each service. All defects noted during the video inspection shall be corrected by the Contractor. The Contractor shall provide 48 hours’ notice to the City prior to the cleaning and/or video inspection in the event the City desires to witness the inspection.

33. Testing Notice. Notice to the City, for any testing related to sewer line work, will be required of the Contractor, 48 hours in advance of testing.

34. Damaged Piping. Should any piping be damaged prior to acceptance by the City, the whole joint will be replaced.

RELATION OF WATER MAINS TO SEWERS

(a) Lateral Separation of Sewer and Water Mains. Water Mains shall be laid at least 10 feet laterally from existing or proposed sewer, unless local conditions or barriers prevent a 10 foot lateral separation in which case:

1. *The water main is laid in a separate trench, with the elevation of the bottom of the water main at least 18 inches above the top of the sewer; or*
2. *The water main is laid in the same trench as the sewer with the water main located at one side of a bench of undisturbed earth, and with the elevation of the bottom of the water main at least 18 inches above the top of the sewer.*

(b) Crossing a Water Main over a Sewer. Whenever it is necessary for a water main to cross over a sewer, the water main shall be laid at such an elevation that the bottom of the water main is at least 18 inches above the top of the sewer, unless local conditions or barriers prevent an 18 inch vertical separation — — in which case both the water main and sewer shall be constructed of ferrous materials and with joints that are equivalent to water main standards for a distance of 10 feet on each side of the point of crossing.

(c) Crossing a Water Main Under a Sewer. Whenever it is necessary for a water main to cross under a sewer, both the water main and the sewer shall be constructed of ferrous materials and with joints equivalent to water main standards for a distance of 10 feet on each side of the point of crossing. A section of water main pipe shall be centered at the point of crossing.

History Note: Statutory Authority G.S. 130—157 to 1611; Eff. January 1, 1977

W-1

CITY OF MEBANE STANDARD	RELATION OF WATER MAINS TO SEWER		
	SCALE: N.T.S.	DATE: 7/1/21	DRAWN BY: WDF

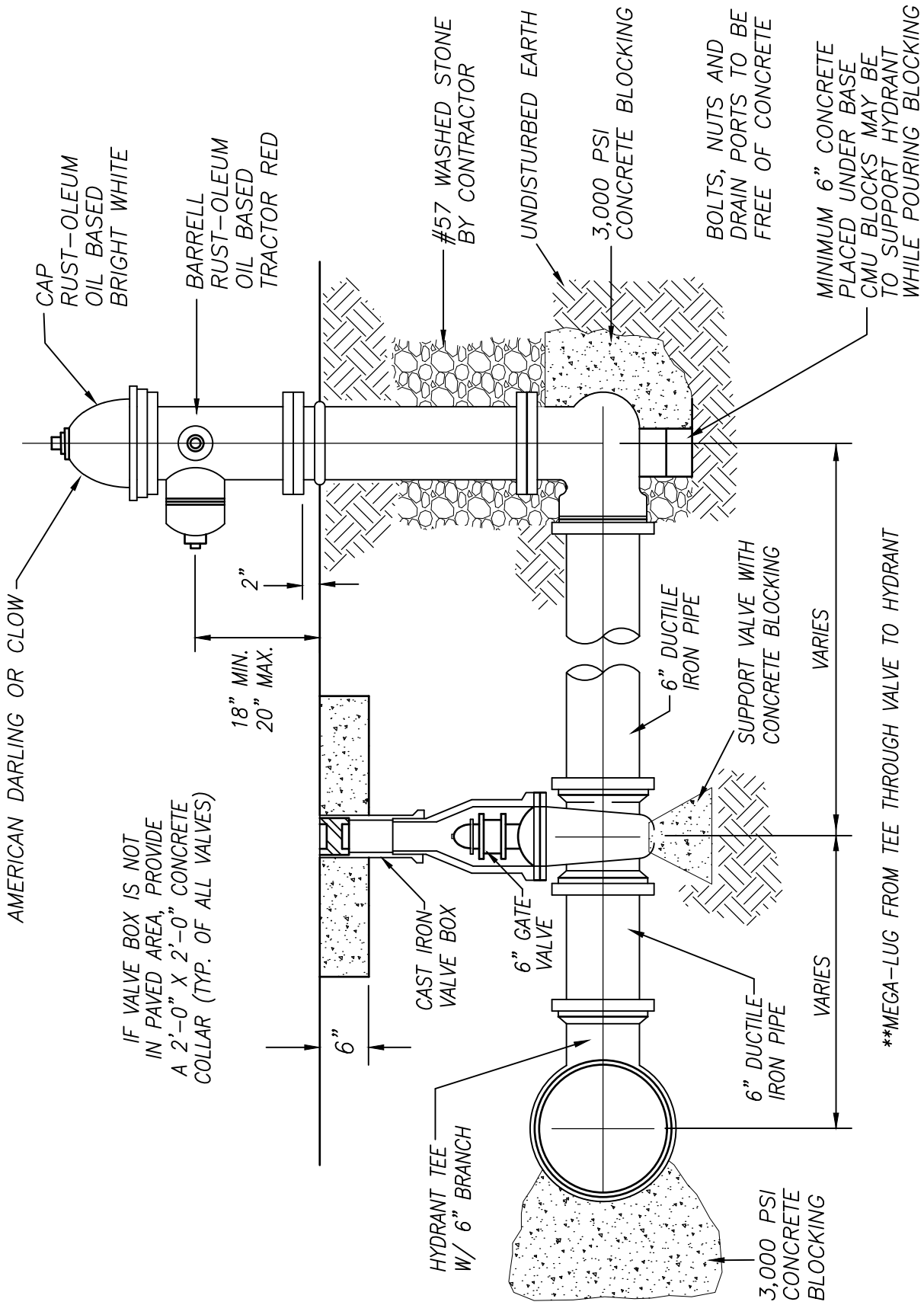

W-2

CITY OF MEBANE STANDARD

FIRE HYDRANT INSTALLATION

SCALE: N.T.S.	DATE: 7/1/21	DRAWN BY: WDF

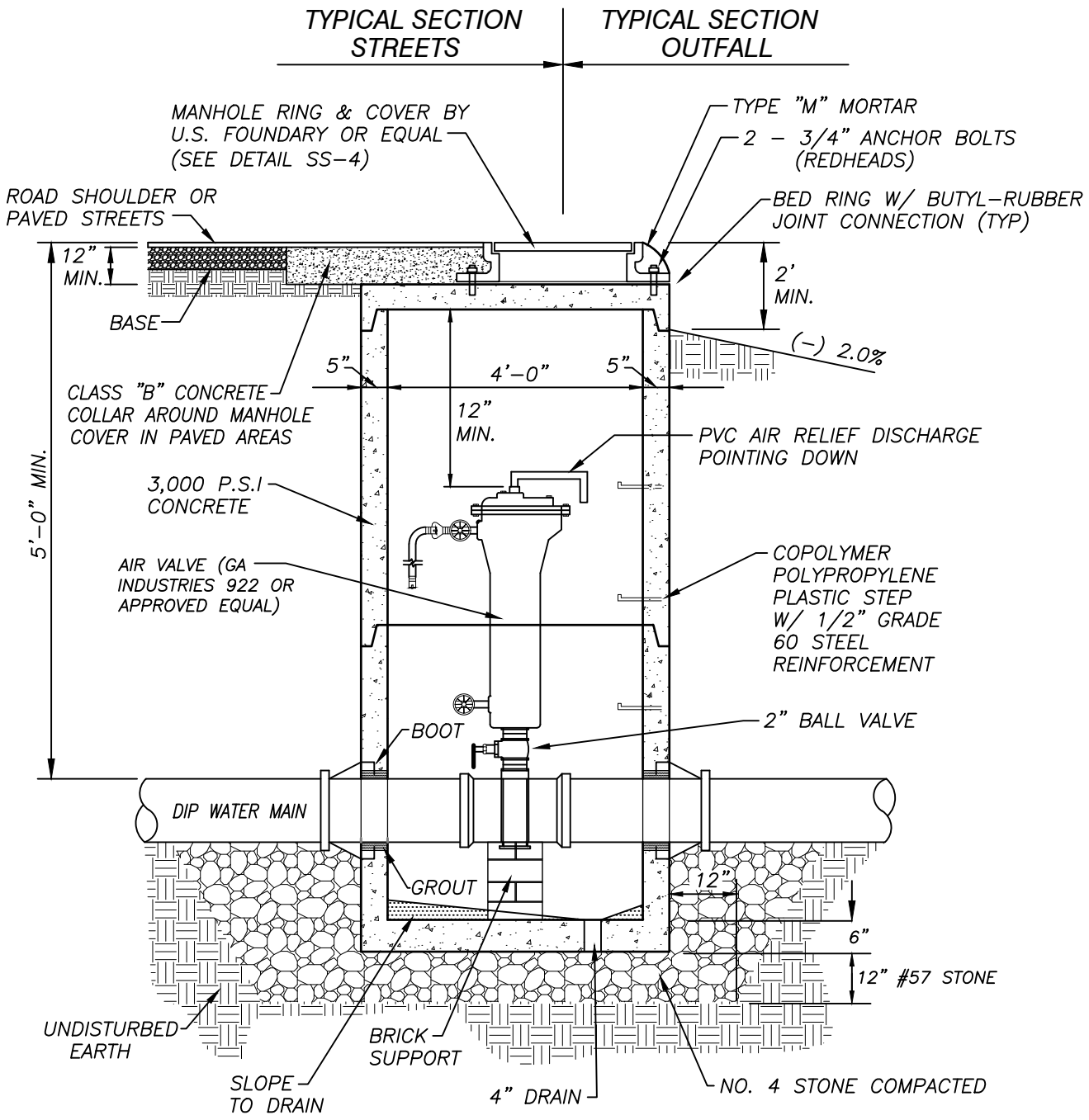

NOTES:
1. MANHOLES ARE TO BE AS MFG. N.C. PRODUCTS OR APPROVED EQUAL.
2. GROUT ALL JOINTS FROM INSIDE.

W-3

CITY OF MEBANE STANDARD	WATER AIR RELIEF MANHOLE WITH FLAT SLAB TOP		
	SCALE: N.T.S.	DATE: 7/1/21	DRAWN BY: WDF

NOTES:

1. 1" BLOW-OFF REQUIRED ON 2",3", AND 4" MAINS
2. 2" BLOW-OFF REQUIRED ON 6"-8" MAINS
3. TEMPORARY HYDRANT AS BLOW-OFF REQUIRED ON 10" & GREATER MAINS
4. ALL BLOW-OFF'S SHALL BE BEHIND CURB & SIDEWALK.

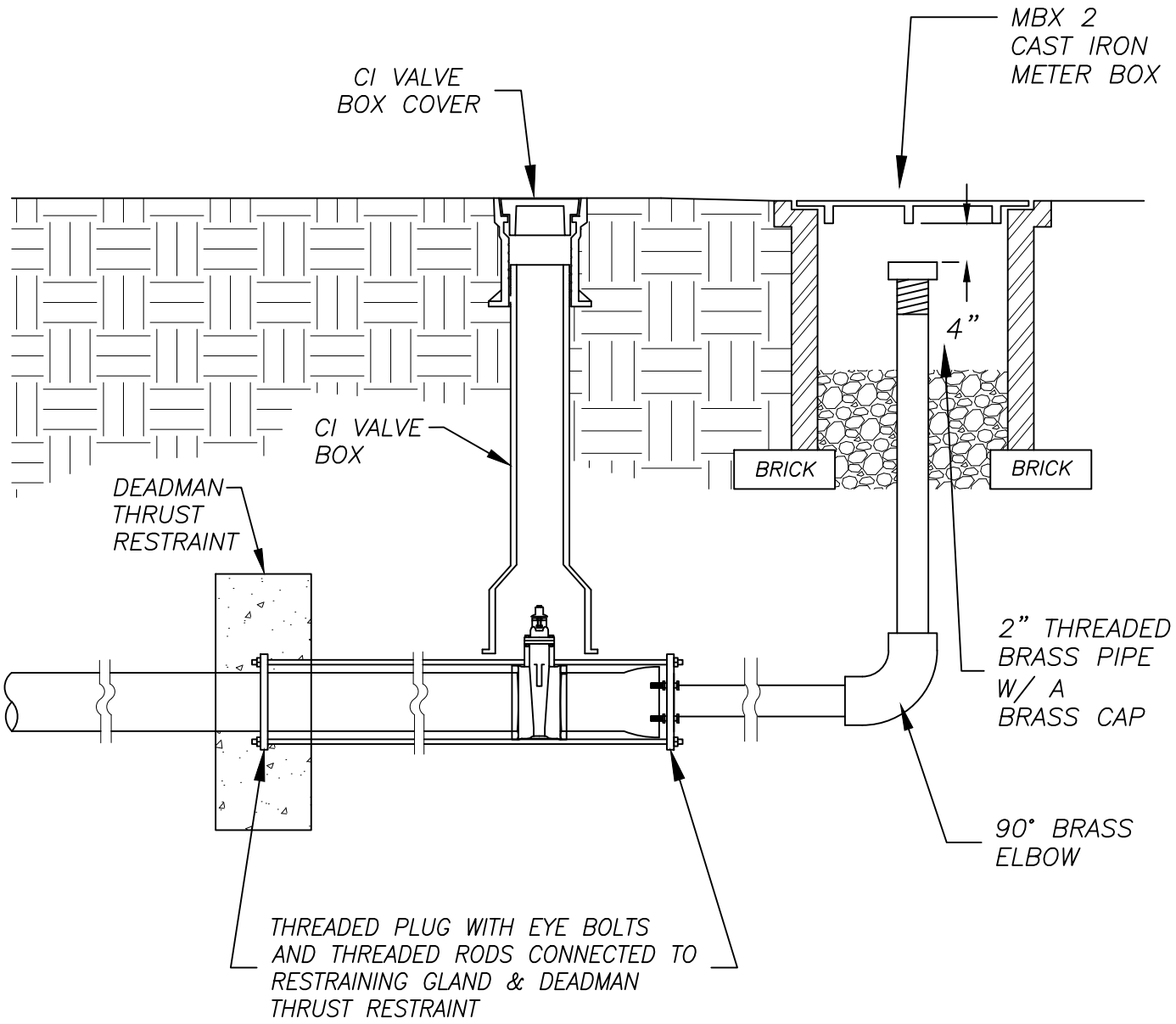

W-4

CITY OF MEBANE STANDARD	2" BLOW-OFF ASSEMBLY		
	SCALE: N.T.S.	DATE: 7/1/21	DRAWN BY: WDF

APPROVED DEVICES

A. RPZ

1. WILKINS 375 ADA W/ REMOTE READOUT (GAL)

2. FEBCO SERIES LF866 DETECTOR WITH REMOTE READER (GAL.)

B. DDC

1. FEBCO LF825Y WITH REMOTE READER (GAL.)

2. WILKINS MODEL 975XL2 ADA WITH REMOTE READOUT (GAL)

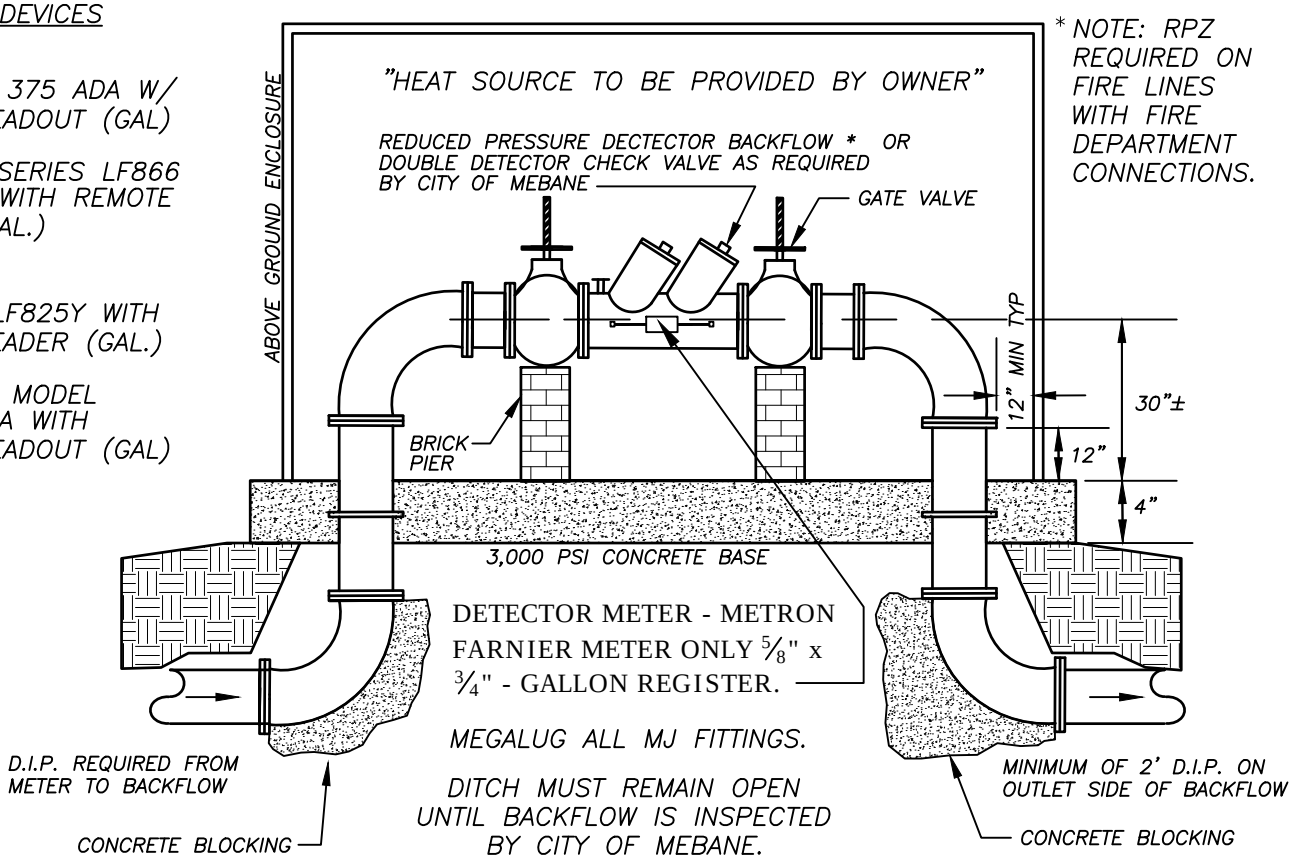

NOTES

1. THE BACKFLOW DEVICE SHALL BE WITHIN 10' OF AND ON THE PROPERTY SIDE OF THE METER. ENCLOSURE SHALL NOT OBSTRUCT SITE DISTANCE AT ROAD CROSSINGS.
2. ALL BACKFLOW DEVICES SHALL BE INSTALLED ABOVE GROUND IN A HORIZONTAL POSITION UNLESS OTHERWISE PREAPPROVED BY THE CITY OF MEBANE.
3. SHUT OFF VALVES SHALL BE RESILIENT SEAT WITH FLANGED END AND O.S.&Y HAND WHEELS.
4. ALL INTERIOR AND EXTERIOR IRON SURFACES SHALL HAVE EPOXY COATINGS TO CONFORM TO ANSI/AWWA C550 OR MANUFACTURED OF STAINLESS STEEL.
5. APPROVED ABOVE GROUND ENCLOSURES: "HOT BOX", HYDROCOWL, SMI MODEL # b68-EHPZD, B80-EHPZD, B110-EHPZD) OR BFP (#640-1PD, 800-1PD, 950-APD OR 1150-APD. ENCLOSURE MUST HAVE A DRAIN
6. CONTRACTOR SHALL PROVIDE AND INSTALL ON EXTERIOR OF ABOVE GROUND ENCLOSURE AN EXTERIOR ANTENNA FOR DETECTOR METER.
7. TANDEM BACKFLOWS REQUIRED IF SERVING MULTIPLE USERS OR SERVICE CANNOT BE INTERRUPTED
8. DETECTOR METER AND BACKFLOW ASSEMBLY SHALL BE INSTALLED IN ENCLOSURE.
9. PIPE & FITTINGS BELOW GRADE TO BE M.J. WITH RETAINER GLANDS, 150 PSI MIN. WORKING PRESSURE.
10. INSTALL BACKFLOW DEVICE NEAR MAIN WATERLINE CONNECTION AT STREET RIGHT OF WAY.
11. ALL BACKFLOW DEVICES SHALL BE TESTED, INSPECTED, AND MAINTAINED BY THE OWNER. PROVIDE ANNUAL REPORTS TO CITY.

W-5

CITY OF MEBANE STANDARD	ABOVE GRADE BACKFLOW PREVENTER, 3" AND GREATER		
	SCALE: N.T.S.	DATE: 7/1/21	DRAWN BY: WDF

CITY OF MEBANE STANDARD

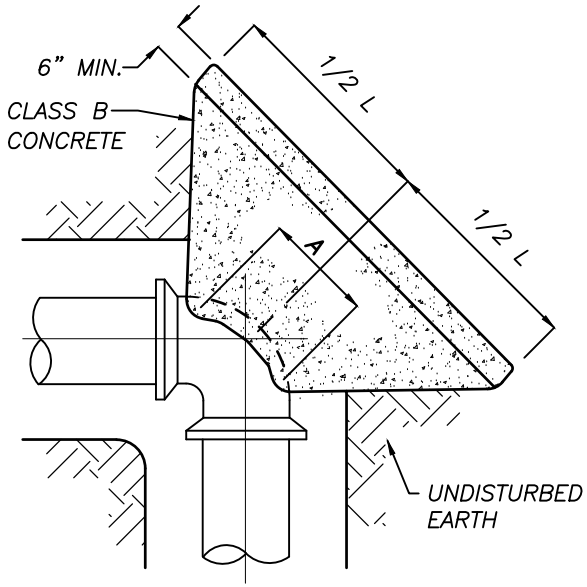

PLAN – BENDS

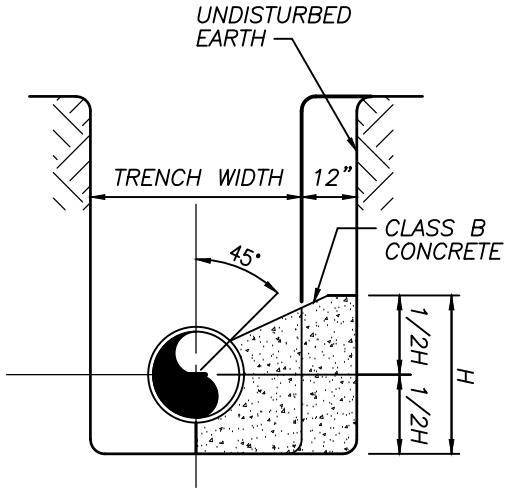

SECTION

BUTTRESS DIMENSIONS						
PIPE SIZE	22 1/2° BENDS		45° BENDS		90° BENDS	
	L	H	L	H	L	H
6"	1'–0"	1'–0"	1'–0"	1'–0"	1'–4"	1'–2"
8"	1'–0"	1'–0"	1'–4"	1'–2"	1'–10"	1'–6"
12"	1'–4"	1'–4"	1'–10"	1'–10"	2'–8"	2'–3"

NOTES:

1. DIMENSION "A" SHOULD BE AS LARGE AS POSSIBLE WITHOUT INTERFERRING WITH THE MECHANICAL JOINT BOLTS
2. THE SHAPE OF THE BACK OF THE BUTTRESS MAY VARY PROVIDED THE CONCRETE IS AGAINST FIRM, UNDISTURDED EARTH.
3. BUTTRESS DIMENSIONS ARE BASED UPON A SOIL RESISTANCE OF TWO TONS PER SQ. FT. AND A WATER PRESSURE OF 150 P.S.I.

THRUST BLOCKS - BENDS

SCALE: N.T.S. | DATE: 7/1/21 | DRAWN BY: WDF

W-6

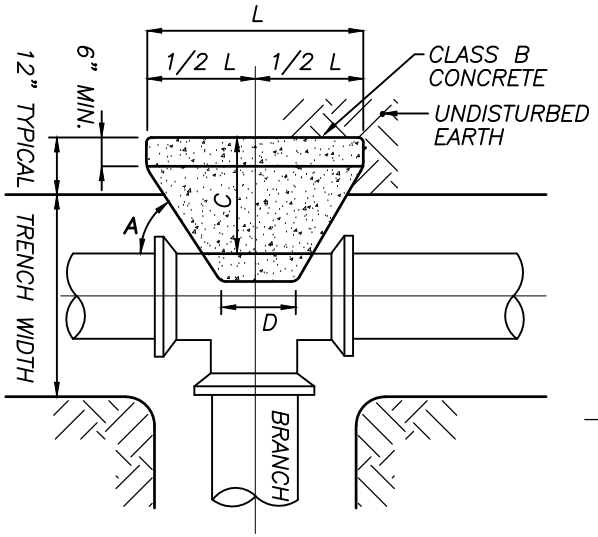

PLAN – TEE

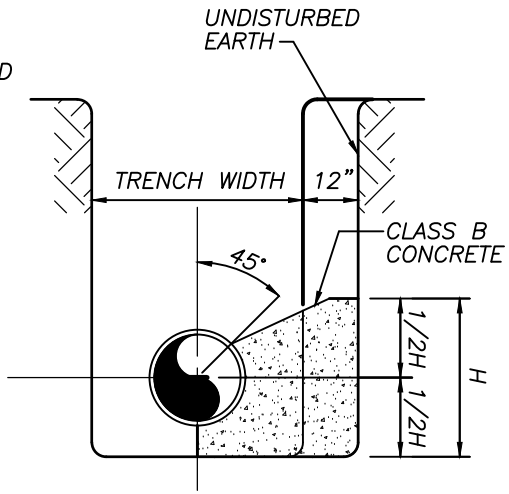

SECTION

BUTTRESS DIMENSIONS				
B. D.	L	H	C	D
6"	1'–3"	1'–0"	SEE NOTE NO. 1	SEE NOTE NO. 2
8"	1'–6"	1'–4"		
12"	2'–3"	2'–0"		

B. D. = BRANCH DIAMETER

NOTES:

1. DIMENSION "C" SHOULD BE LARGE ENOUGH TO MAKE ANGLE "A" EQUAL TO OR GREATER THAN 45°.
2. DIMENSION "D" SHOULD BE AS LARGE AS POSSIBLE WITHOUT INTERFERRING WITH EHT MECHANICAL JOINTS.
3. BUTTRESS DIMENSIONS ARE BASED UPON A SOIL RESISTANCE OF TWO TONS PER SQ. FT. AND A WATER PRESSURE OF 150 P.S.I.

CITY OF MEBANE
STANDARD

THRUST BLOCK - TEES

SCALE: N.T.S.
DATE: 7/1/21
DRAWN BY: WDF

W-7

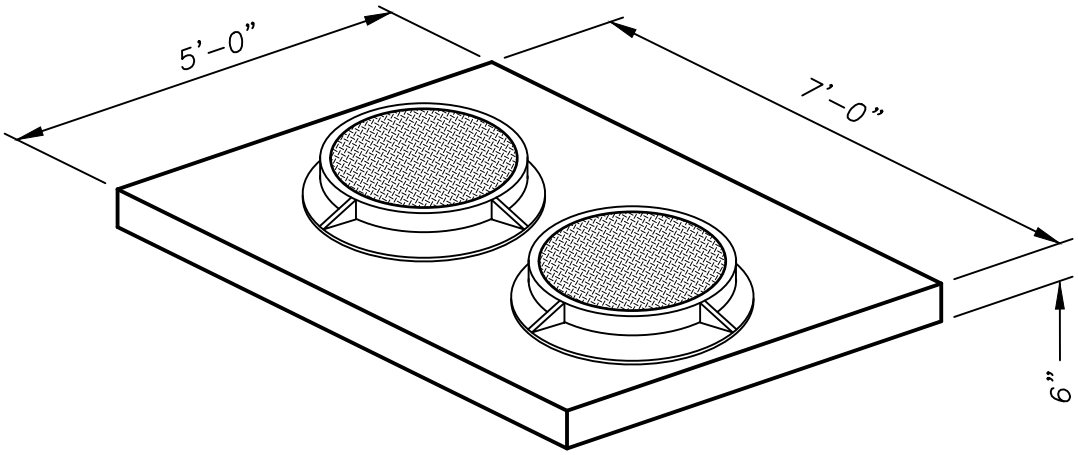

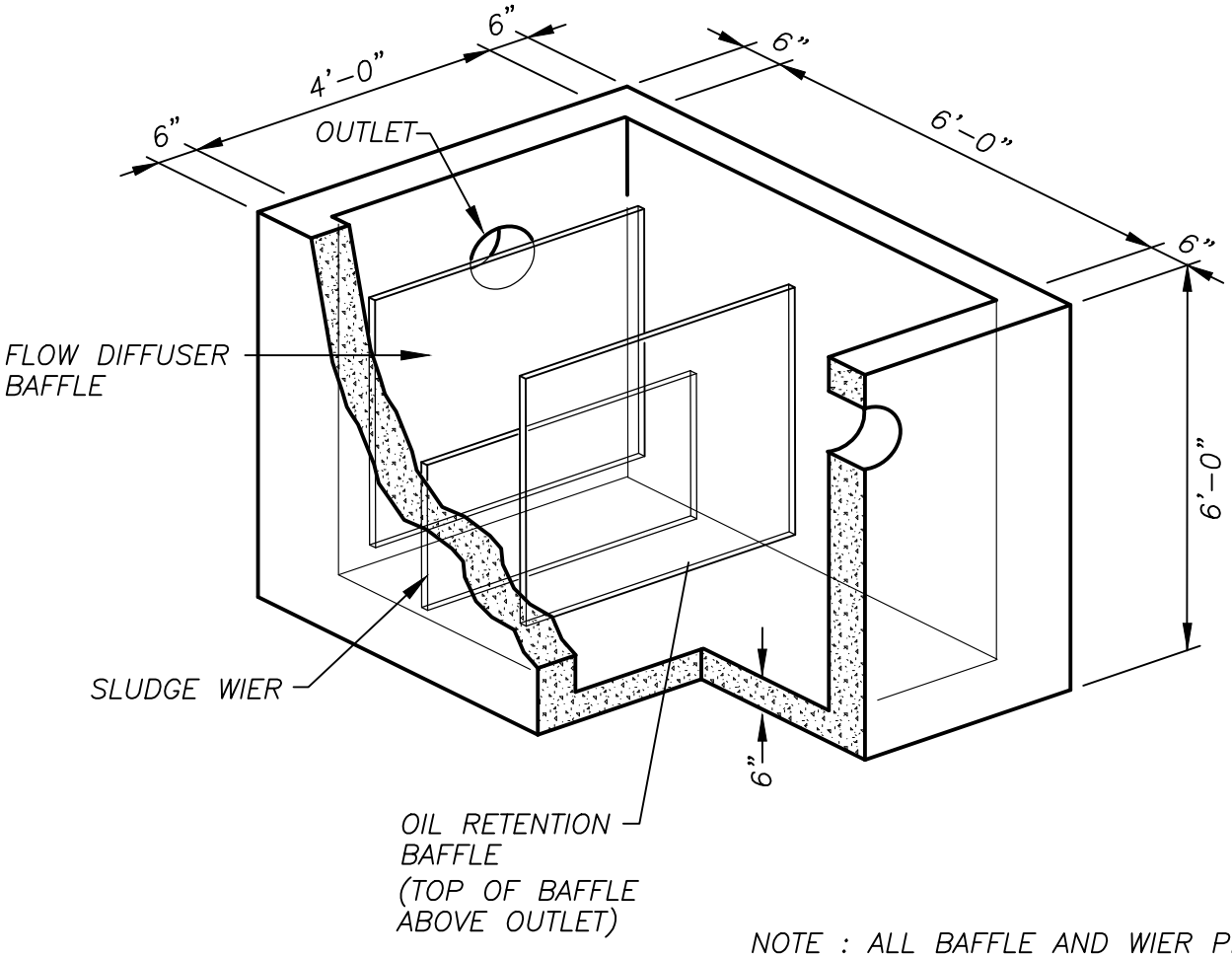

NOTE : ALL BAFFLE AND WIER PLATES ARE TO BE GALVANIZED.

W-8

CITY OF MEBANE STANDARD	OIL WATER SEPARATOR 4' X 6' I.D.		
	SCALE: N.T.S.	DATE: 7/1/21	DRAWN BY: WDF

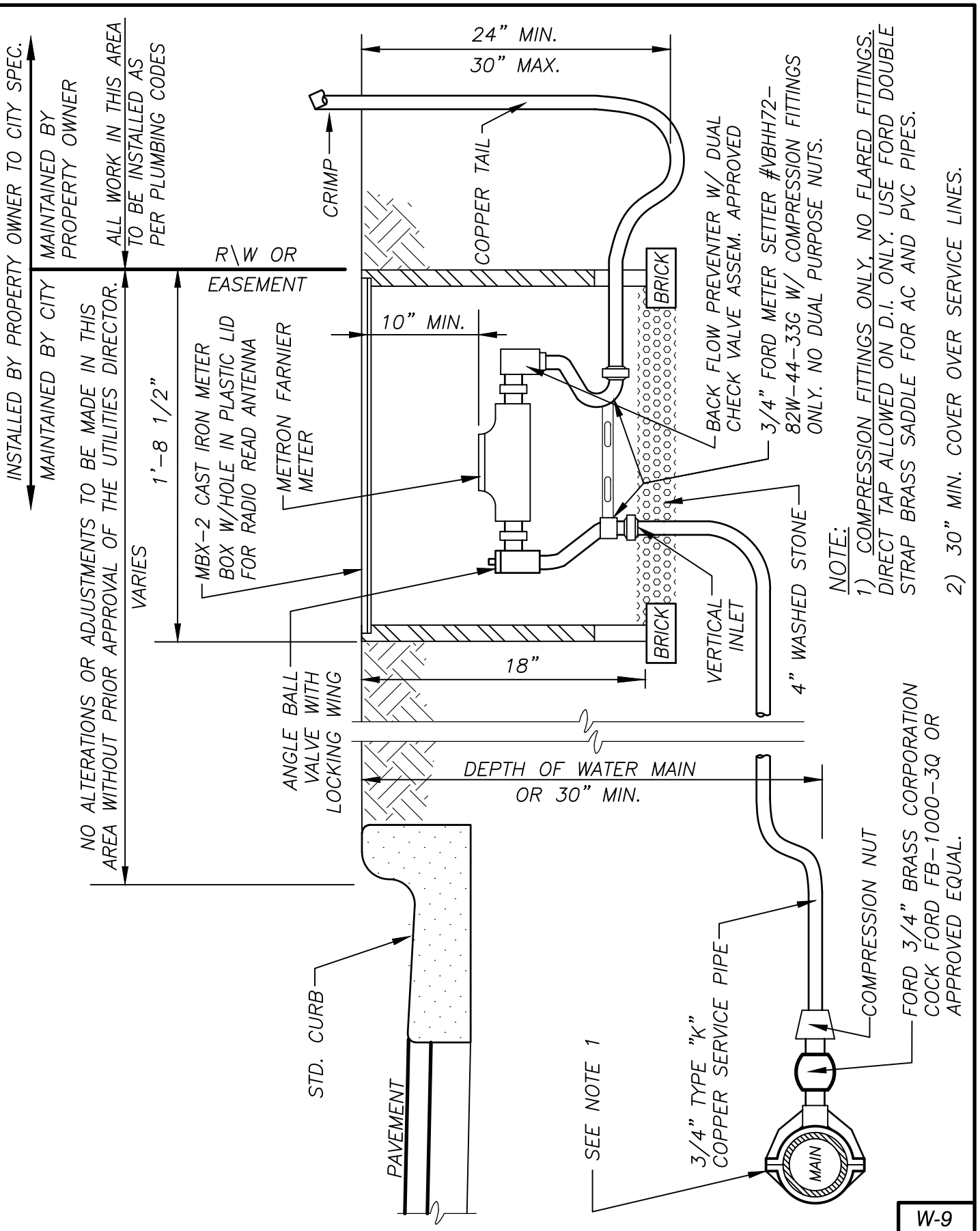

W-9

CITY OF MEBANE STANDARD

3/4" DOMESTIC WATER SERVICE CONNECTION

SCALE: N.T.S.	DATE: 7/1/21	DRAWN BY: WDF

CITY OF MEBANE STANDARD

3/4" WATER CONNECTION WITH RPZ BACKFLOW ASSEMBLY

SCALE: N.T.S. | DATE: 7/1/21 | DRAWN BY: WDF

W-10

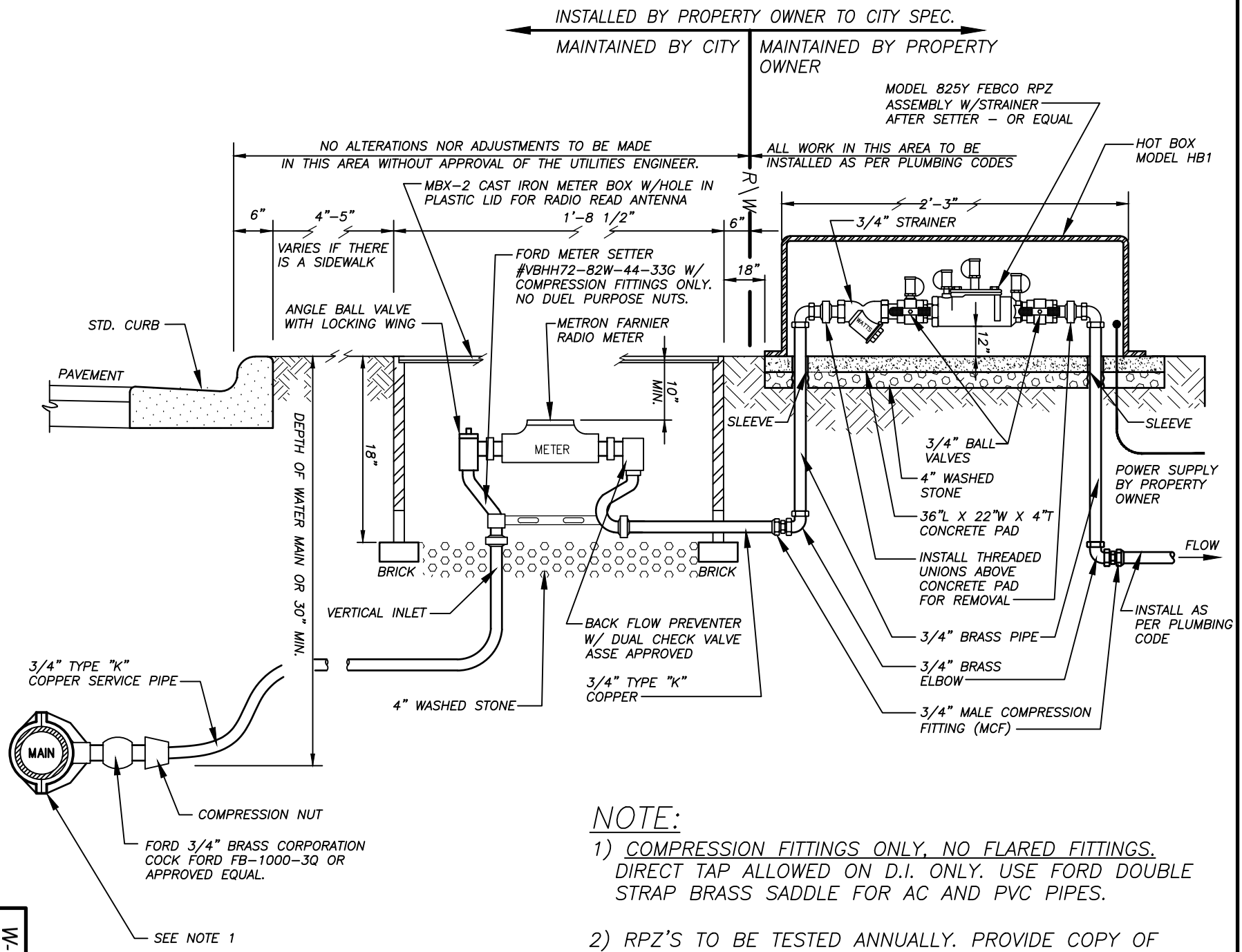

NOTE:

1) COMPRESSION FITTINGS ONLY, NO FLARED FITTINGS. DIRECT TAP ALLOWED ON D.I. ONLY. USE FORD DOUBLE STRAP BRASS SADDLE FOR AC AND PVC PIPES.

2) RPZ'S TO BE TESTED ANNUALLY. PROVIDE COPY OF TEST TO CITY.

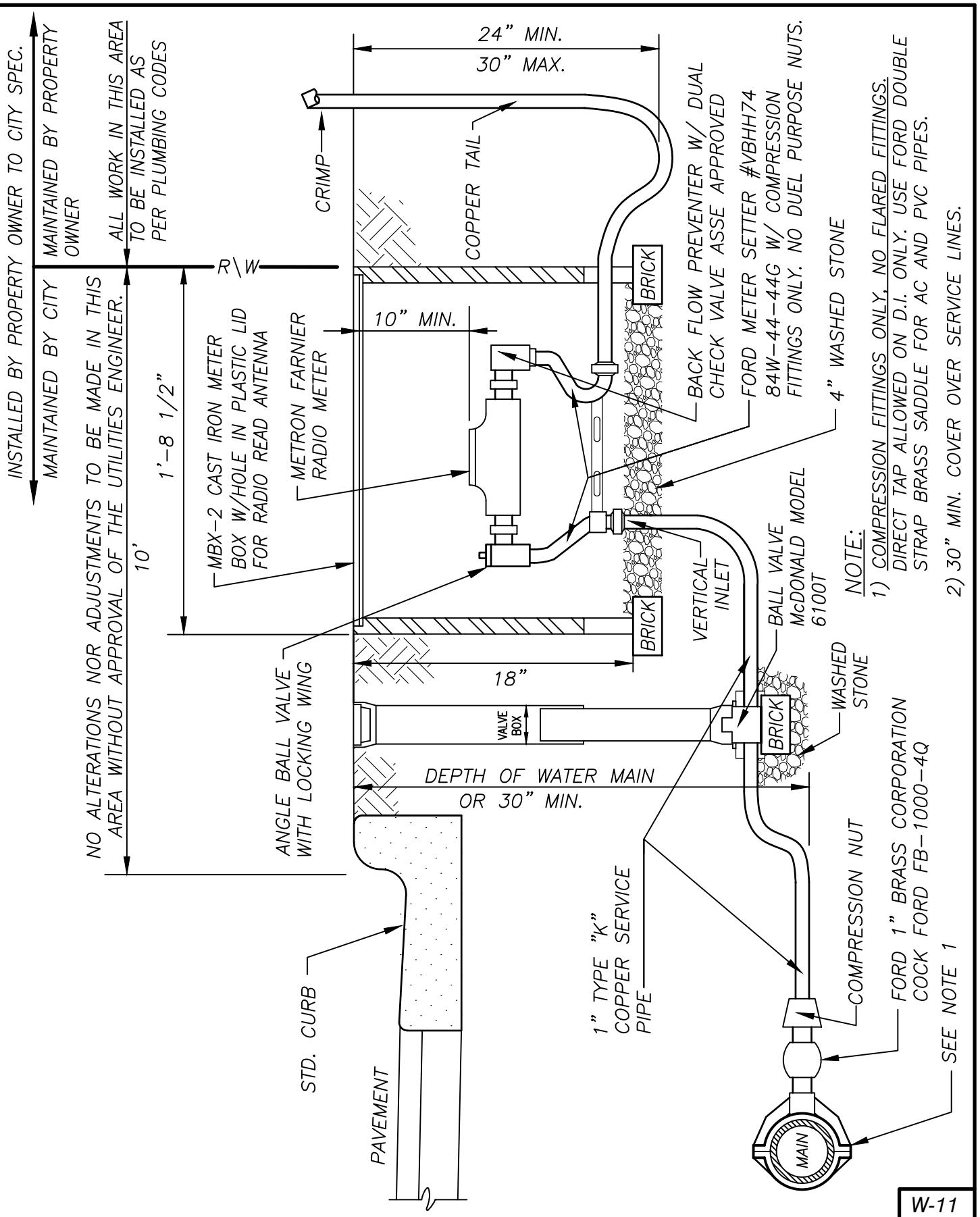

W-11

CITY OF MEBANE STANDARD

1" DOMESTIC WATER SERVICE CONNECTION

SCALE: N.T.S.	DATE: 7/1/21	DRAWN BY: WDF

CITY OF MEBANE STANDARD

1" WATER CONNECTION WITH RPZ BACKFLOW ASSEMBLY

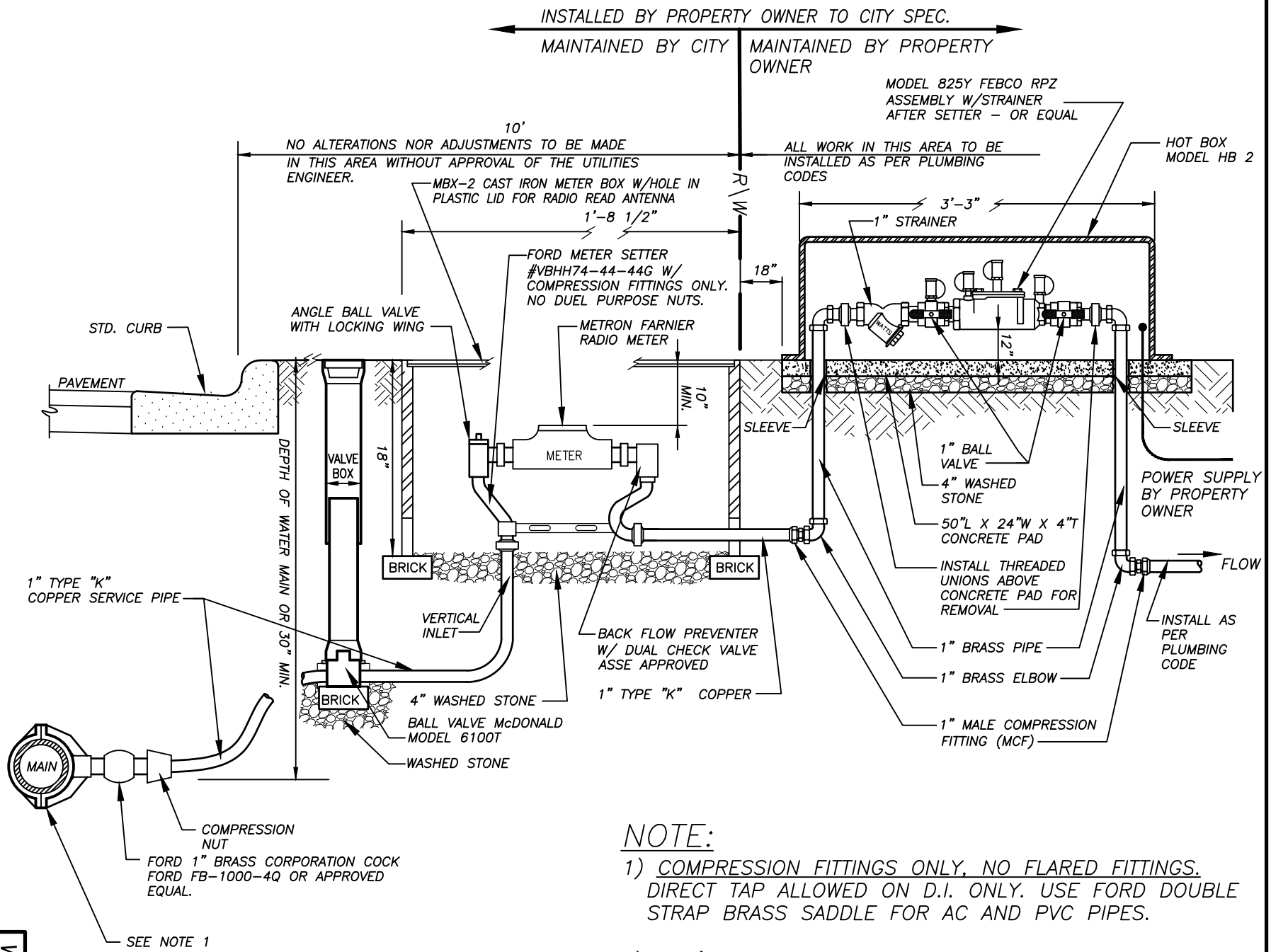

NOTE:

1) COMPRESSION FITTINGS ONLY, NO FLARED FITTINGS. DIRECT TAP ALLOWED ON D.I. ONLY. USE FORD DOUBLE STRAP BRASS SADDLE FOR AC AND PVC PIPES.

2) RPZ'S TO BE TESTED ANNUALLY. PROVIDE COPY OF TEST TO CITY.

SCALE: N.T.S.
DATE: 7/1/21
DRAWN BY: WDF

W-12

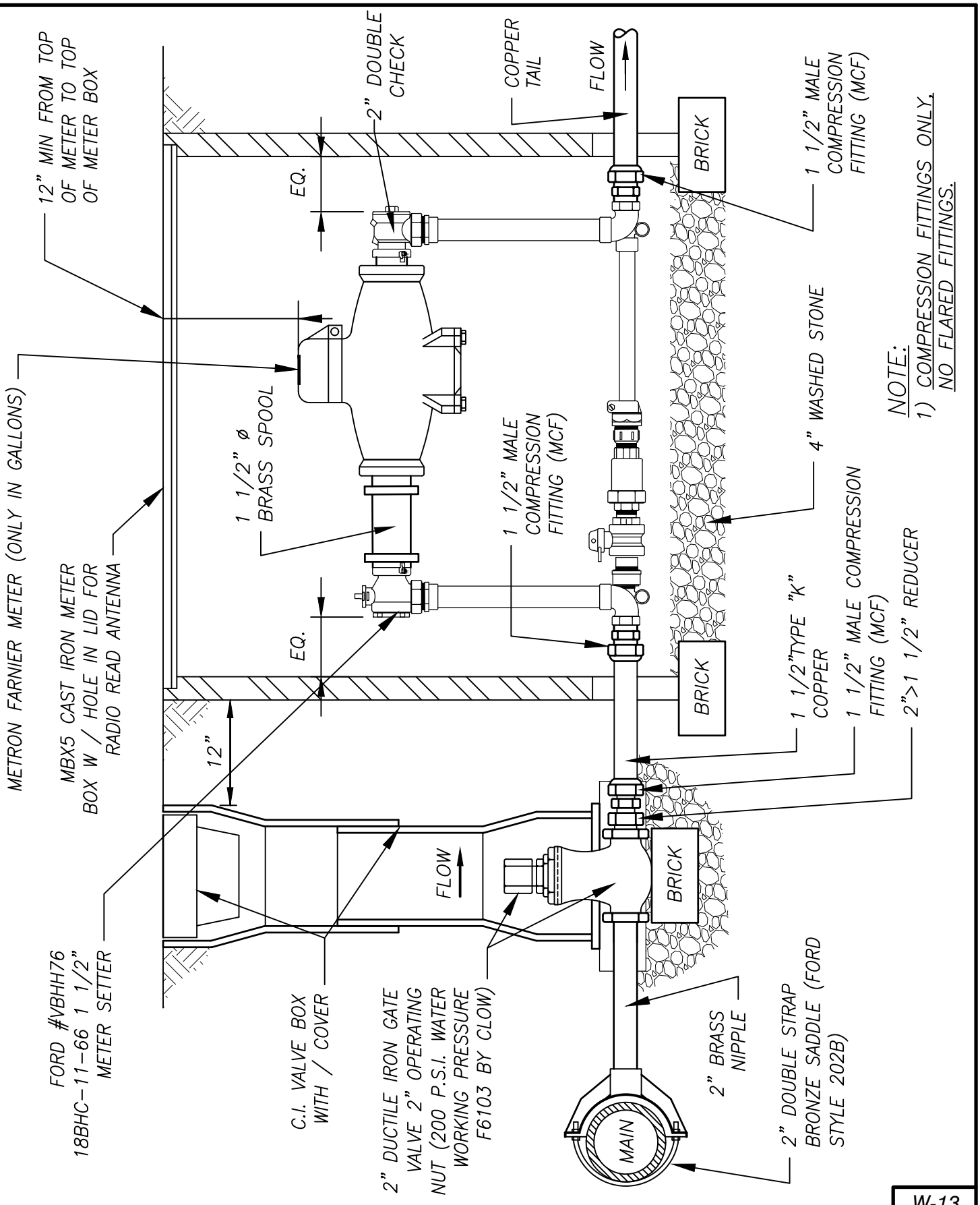

W-13

CITY OF MEBANE STANDARD

1 1/2" DOMESTIC WATER CONNECTION

SCALE: N.T.S.	DATE: 7/1/21	DRAWN BY: WDF

CITY OF MEBANE STANDARD

1 1/2" WATER CONNECTION WITH RPZ BACKFLOW ASSEMBLY

SCALE: N.T.S.
DATE: 7/1/21
DRAWN BY: WDF

W-14

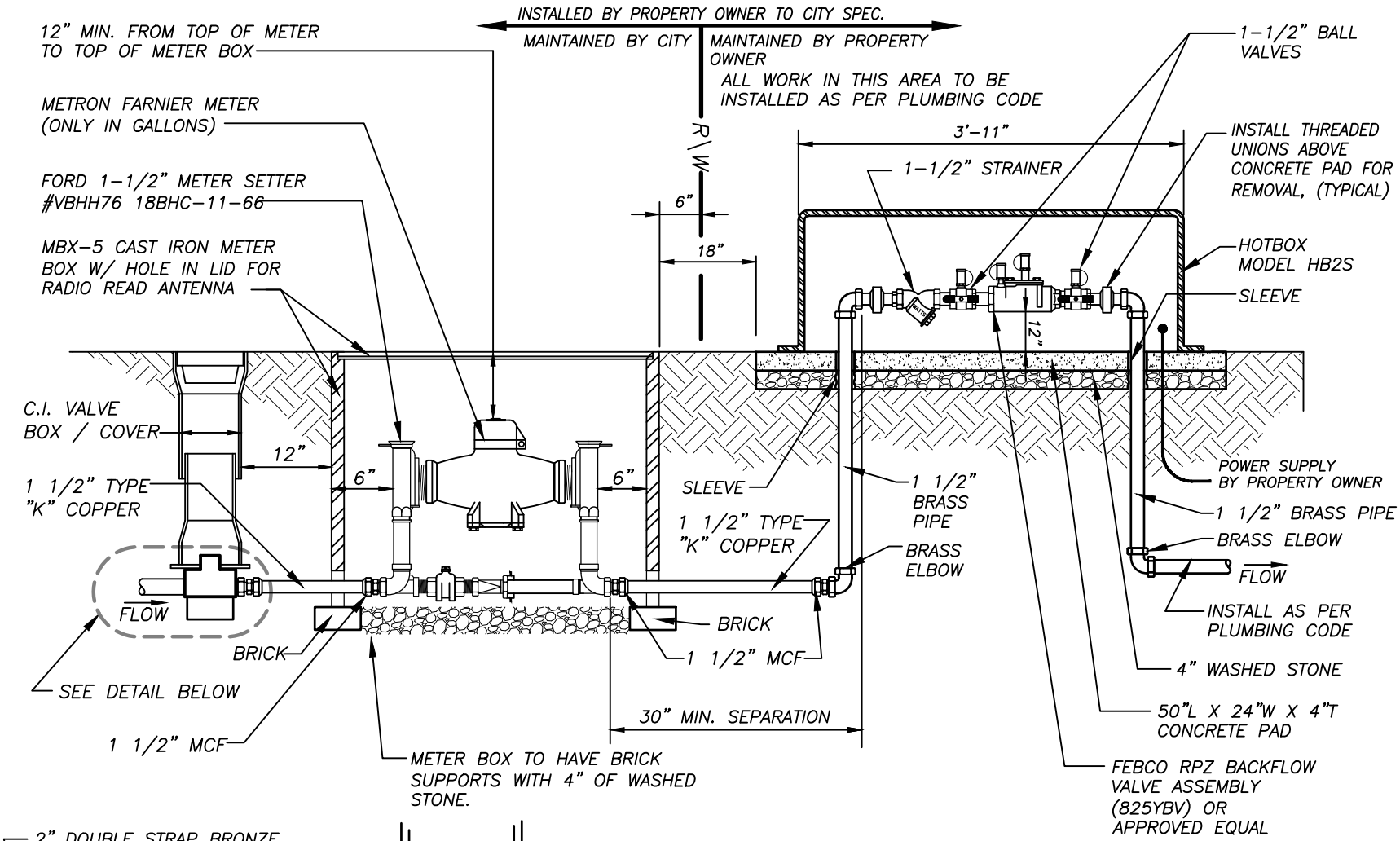

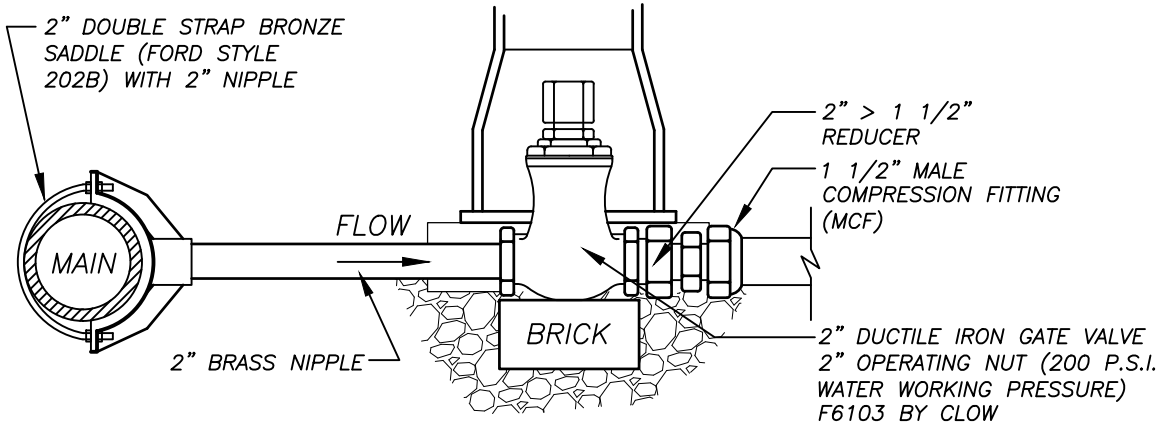

NOTE:

1) COMPRESSION FITTINGS ONLY, NO FLARED FITTINGS.

2) RPZ'S TO BE TESTED ANNUALLY. PROVIDE COPY OF TEST TO CITY.

CITY OF MEBANE STANDARD

2" DOMESTIC WATER CONNECTION

SCALE: N.T.S.
DATE: 7/1/21
DRAWN BY: WDF

W-15

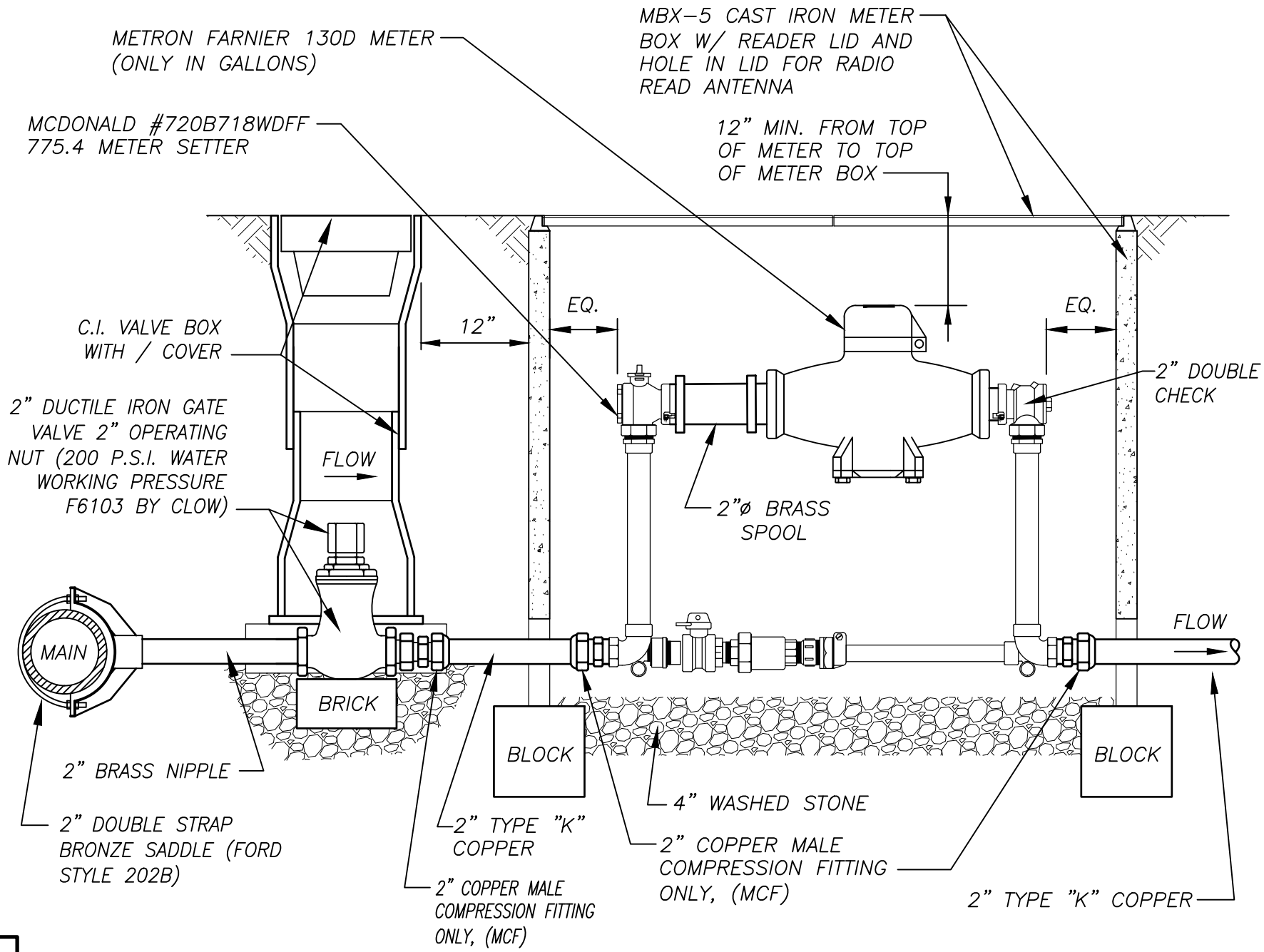

NOTE:

1) COMPRESSION FITTINGS ONLY, NO FLARED FITTINGS.

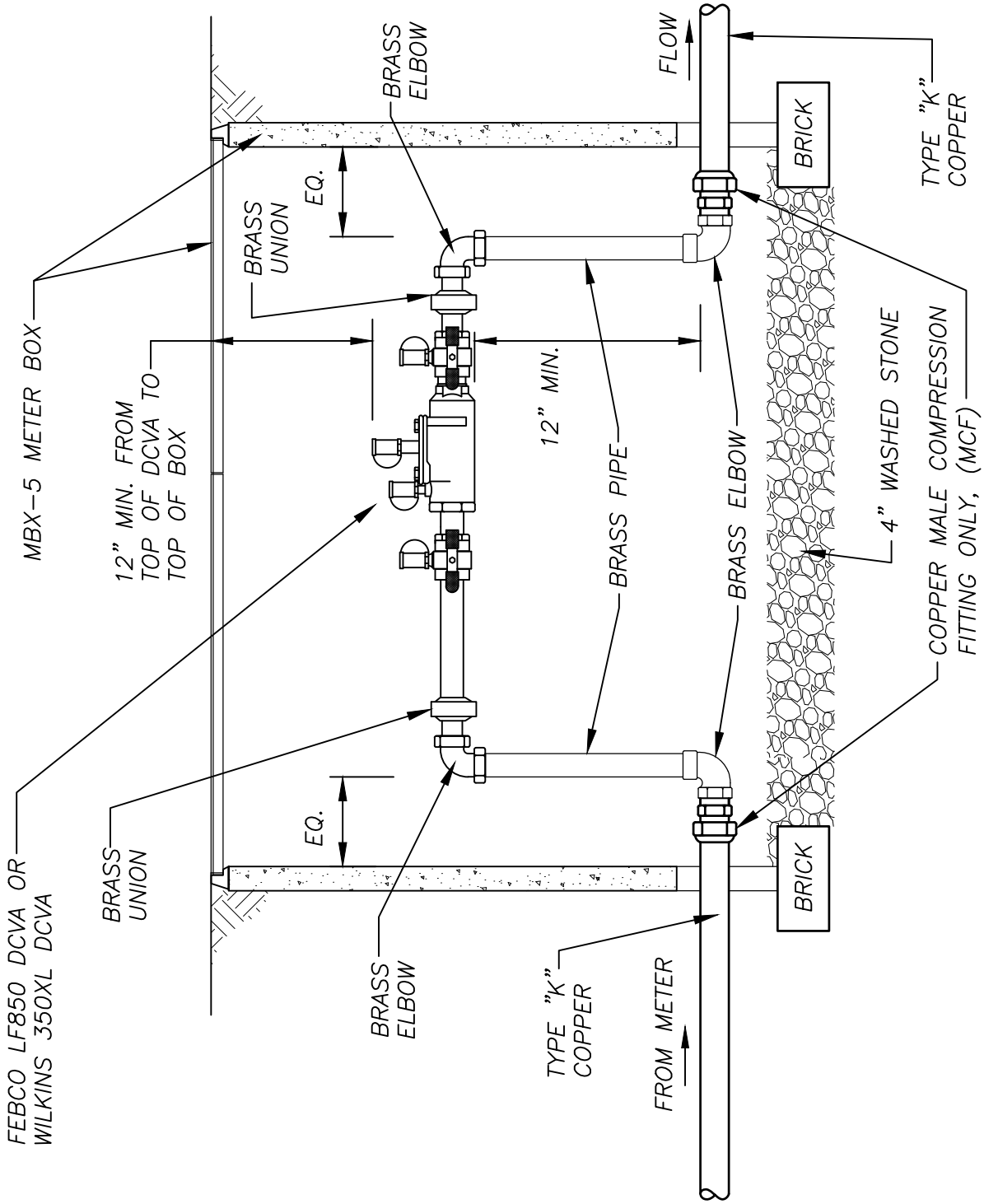

NOTE:
1) COMPRESSION FITTINGS ONLY, NO FLARED FITTINGS.
2) DCVA IS ONLY ALLOWED WHEN THERE IS NO CHEMICAL INJECTION FEED OR BOOSTER PUMP.

W-16

CITY OF MEBANE STANDARD	DOMESTIC BELOW GRADE DOUBLE CHECK VALVE ASSEMBLY		
	SCALE: N.T.S.	DATE: 7/1/21	DRAWN BY: WDF

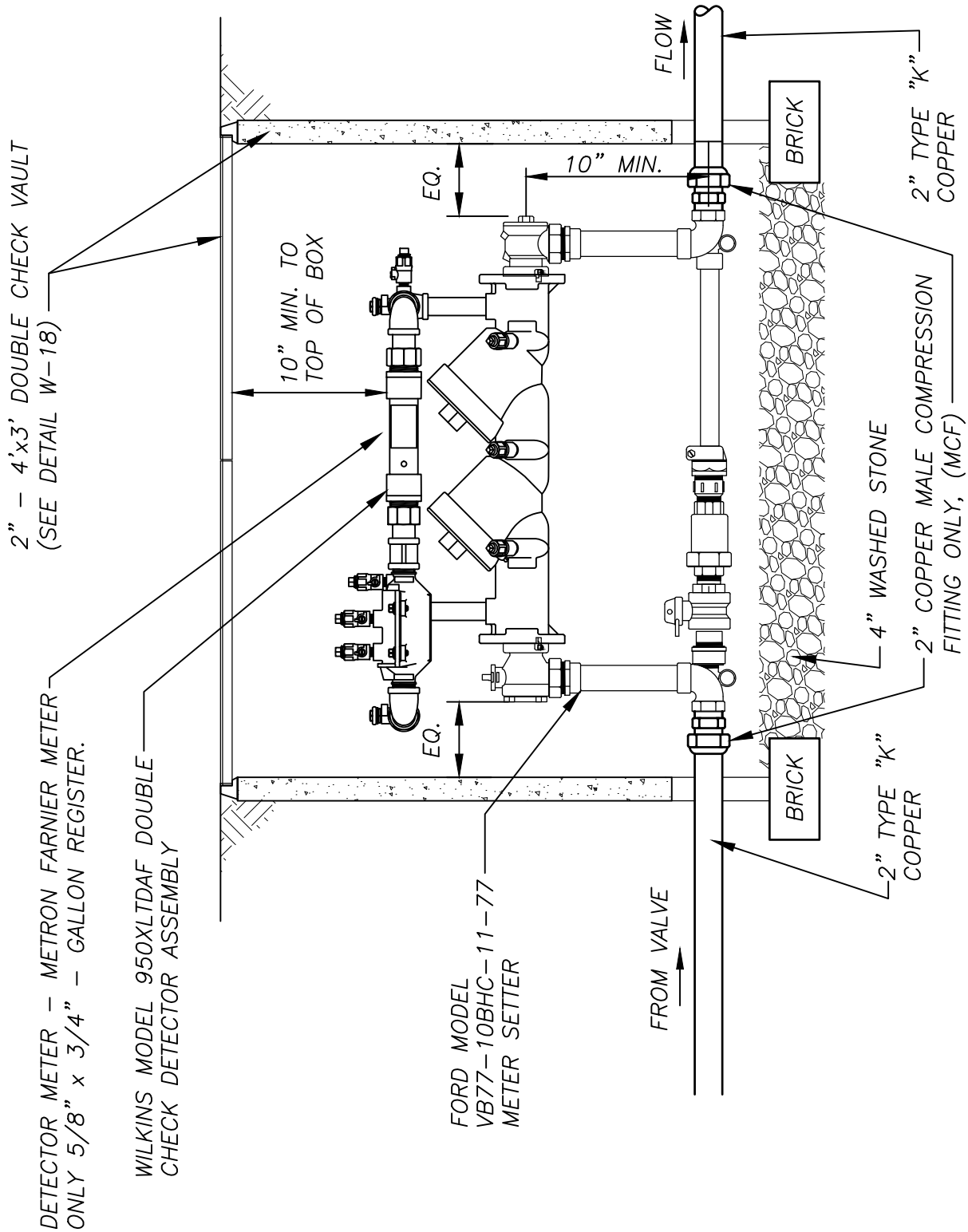

NOTE:
1) COMPRESSION FITTINGS ONLY, NO FLARED FITTINGS.
2) DCDA IS ONLY ALLOWED WHEN THERE IS NO CHEMICAL INJECTION FEED OR BOOSTER PUMP.

W-17

CITY OF MEBANE STANDARD	2" FIRE LINE BELOW GRADE DOUBLE CHECK DETECTOR ASSEMBLY		
	SCALE: N.T.S.	DATE: 7/1/21	DRAWN BY: WDF

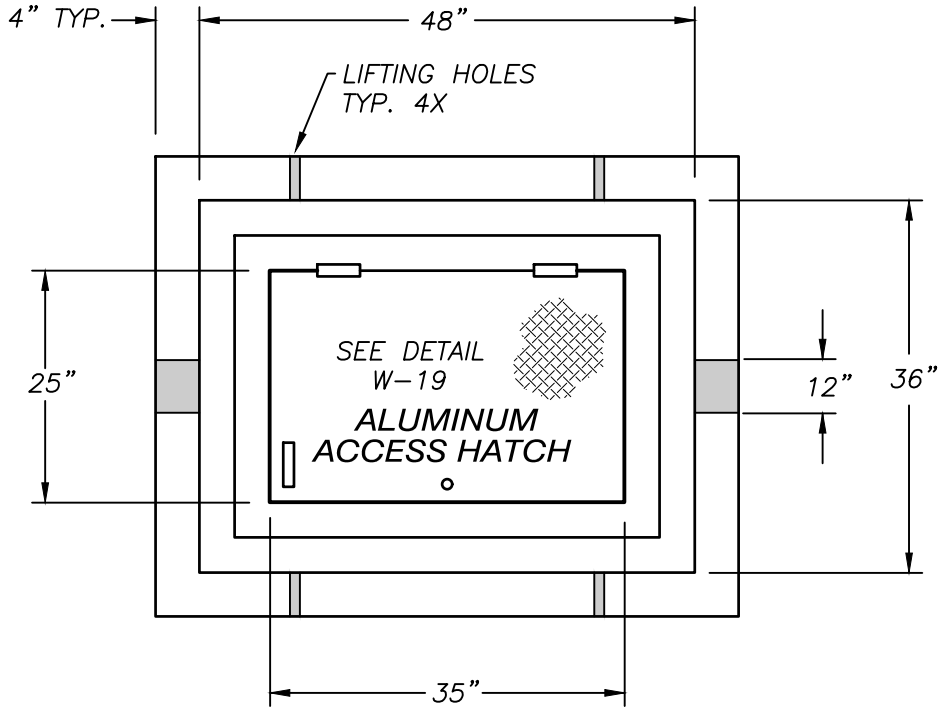

PLAN VIEW

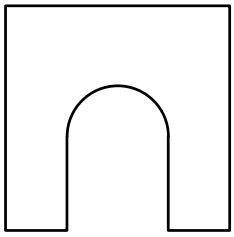

TYP. SHAPE
DOGHOUSE

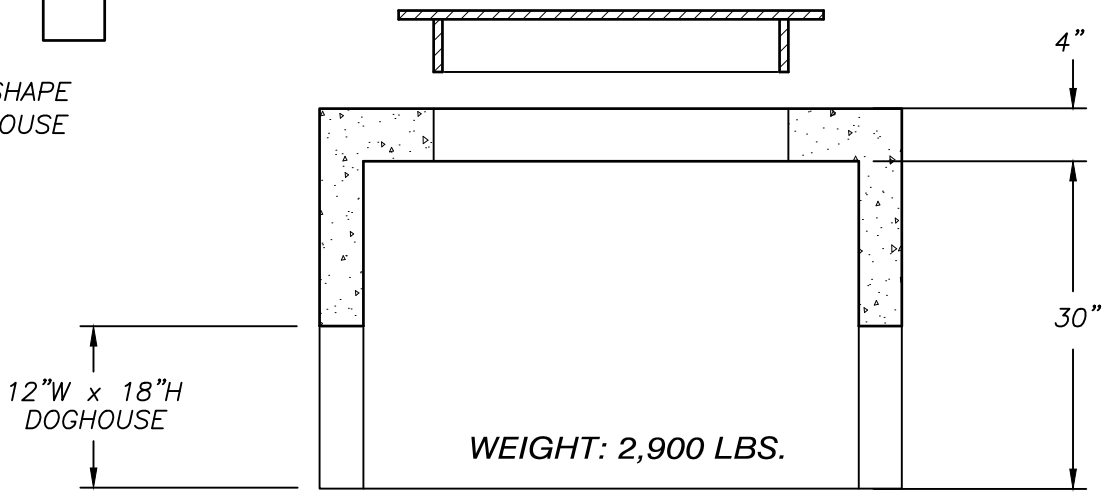

ELEVATION

W-18

CITY OF MEBANE STANDARD	PRECAST CONCRETE 4' X 3' DOUBLE CHECK VAULT		
	SCALE: N.T.S.	DATE: 7/1/21	DRAWN BY: WDF

CITY OF MEBANE STANDARD

ALUMINUM ACCESS HATCH

PROVIDE – TWO HOLES IN LID FOR RADIO READER ANTENNAS. COORDINATE SIZE AND LOCATIONS WITH UTILITY INSPECTOR.

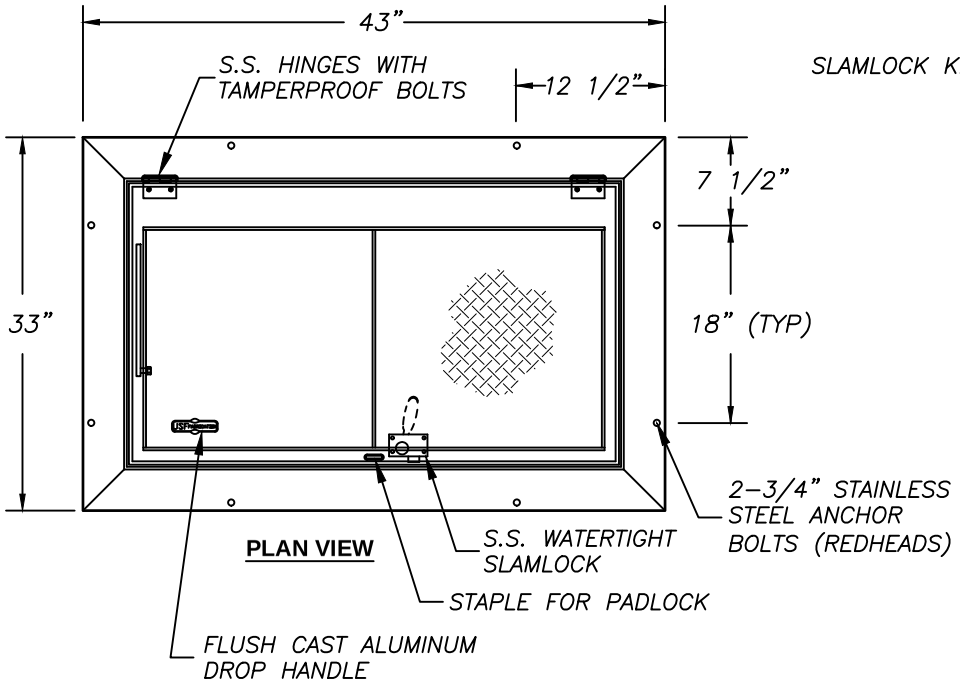

PLAN VIEW

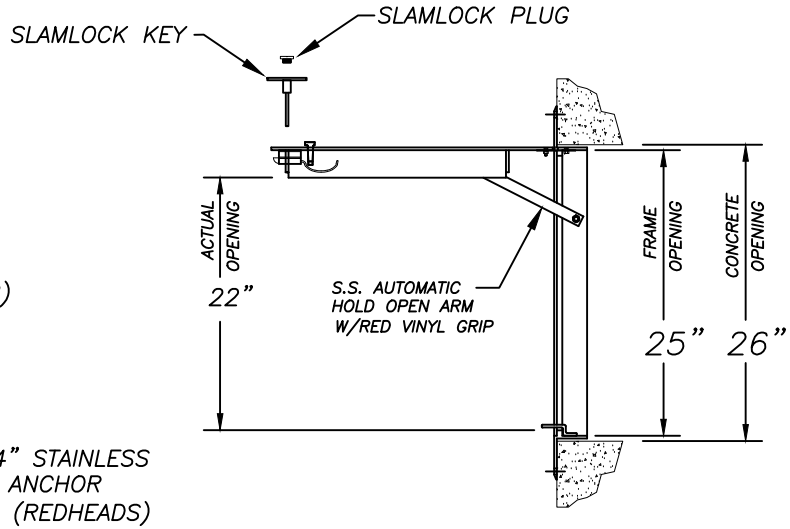

SECTION VIEW SIDE

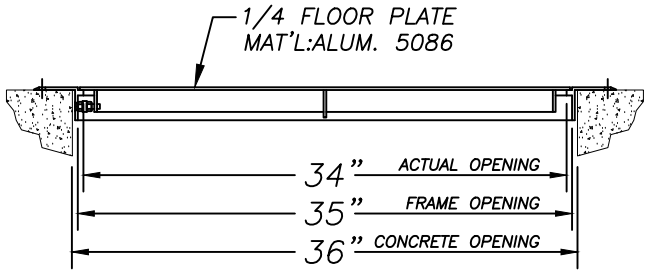

SECTION VIEW FRONT

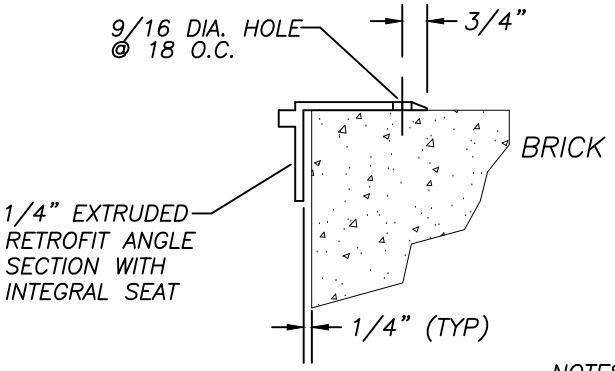

FRAME DETAIL

NOTES:

1– MATERIAL: ALUMINUM
2– LOADING: 300 LBS. PER SQ. FT.
3– 316 STAINLESS STEEL BOLTS
4– APPROXIMATE WEIGHT: 59 LBS.

SCALE: N.T.S.
DATE: 7/1/21
DRAWN BY: WDF

W-19

CITY OF MEBANE STANDARD

2" WATER CONNECTION WITH RPZ BACKFLOW ASSEMBLY

SCALE: N.T.S.
DATE: 7/1/21
DRAWN BY: WDF

W-20

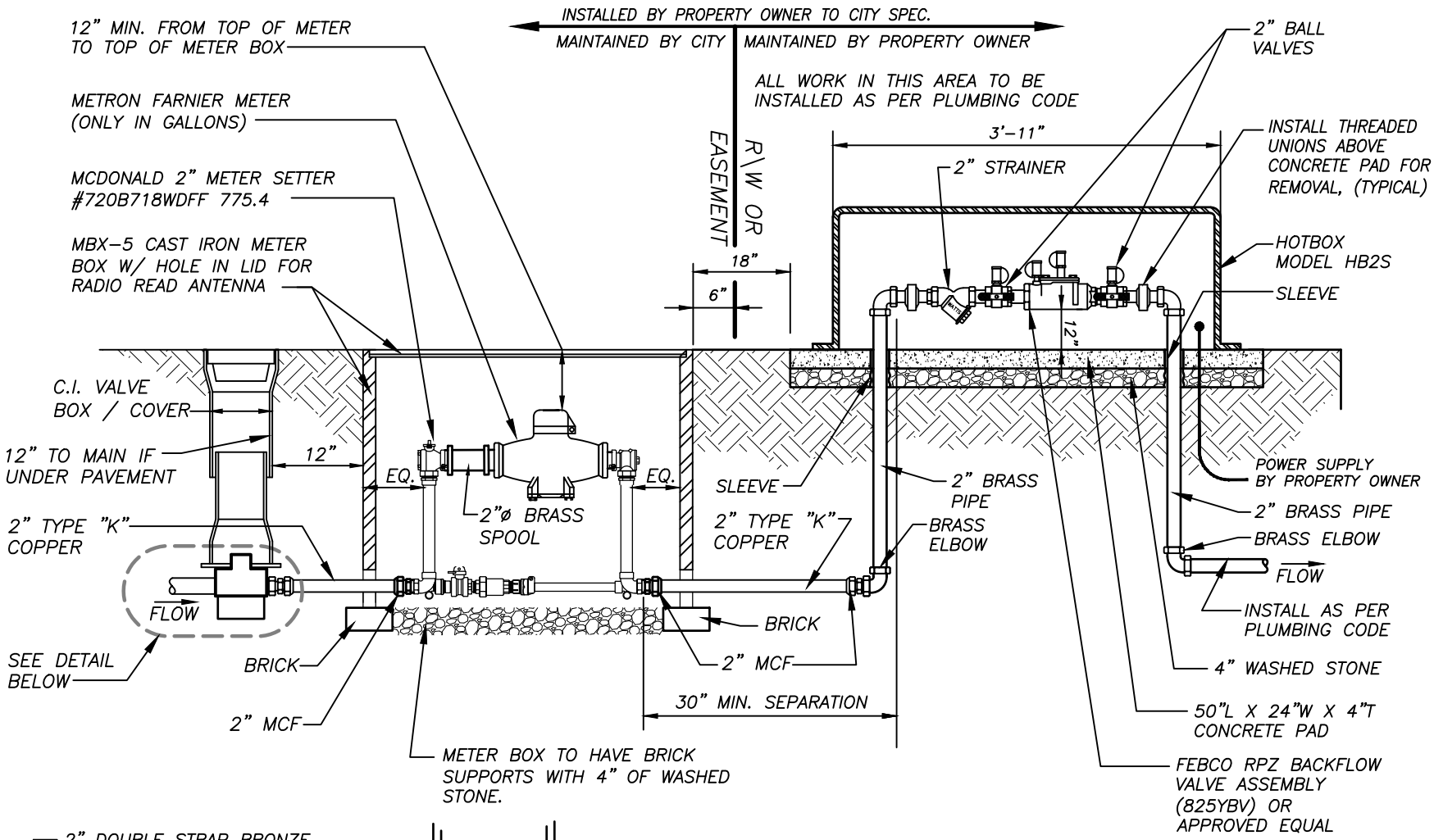

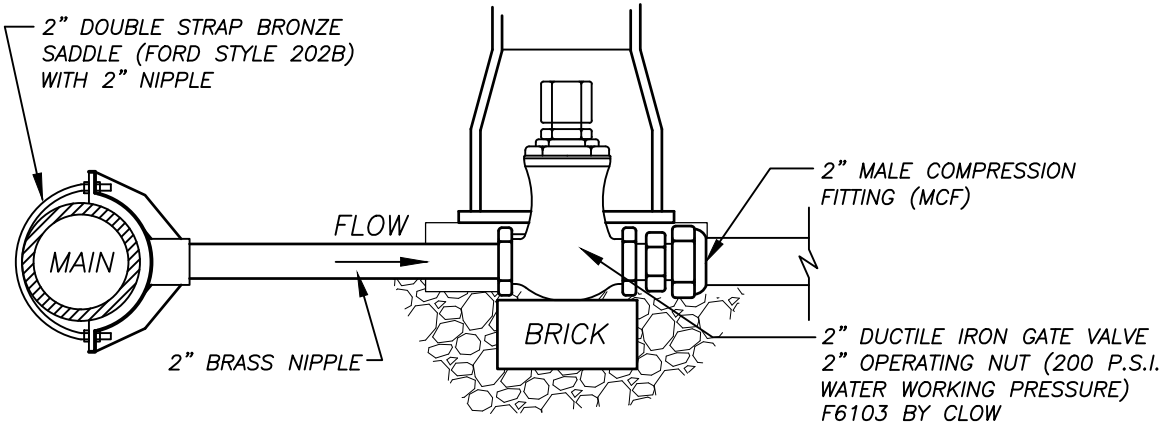

NOTE:

1) COMPRESSION FITTINGS ONLY, NO FLARED FITTINGS.

2) RPZ'S TO BE TESTED ANNUALLY. PROVIDE COPY OF TEST TO CITY.

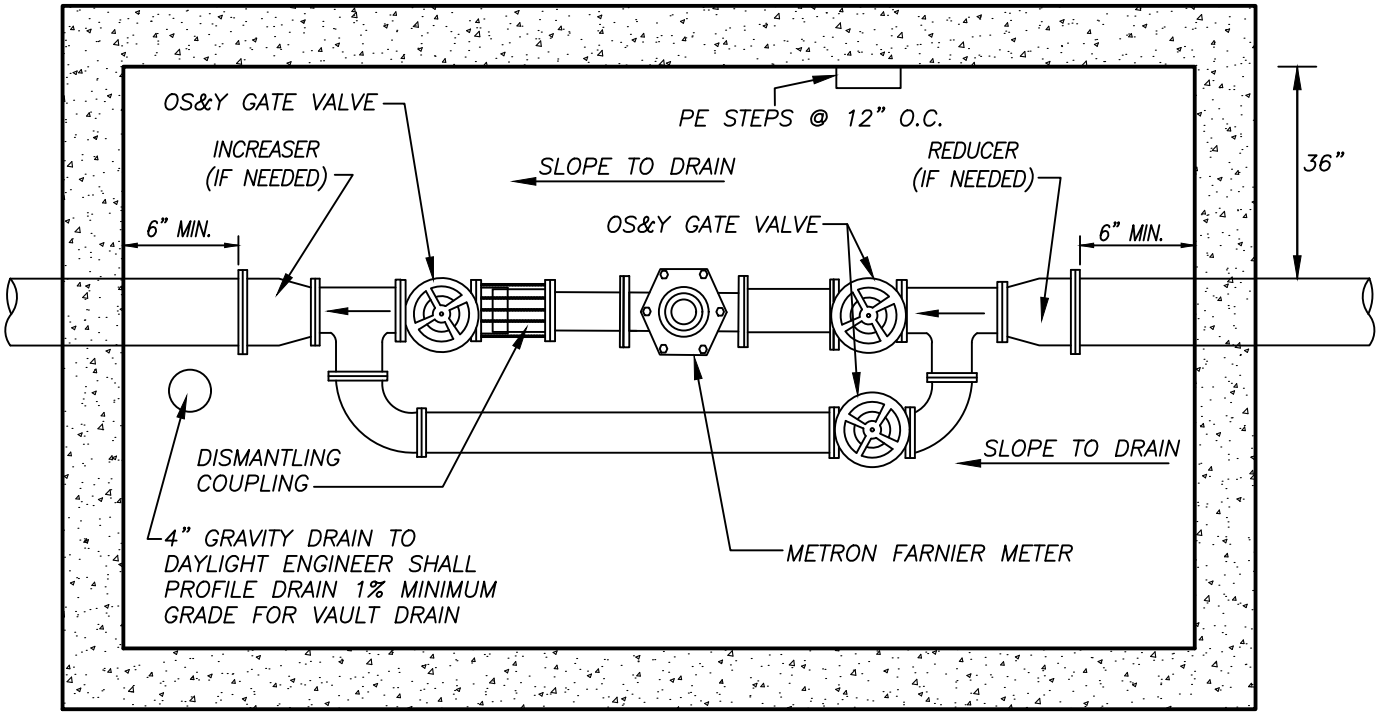

TOP VIEW

VAULT SIZES (INSIDE DEM):
3" METER – 10'x6' VAULT
4" METER – 10'x6' VAULT
6" METER – 12'x8' VAULT
8" METER – 14'x8' VAULT

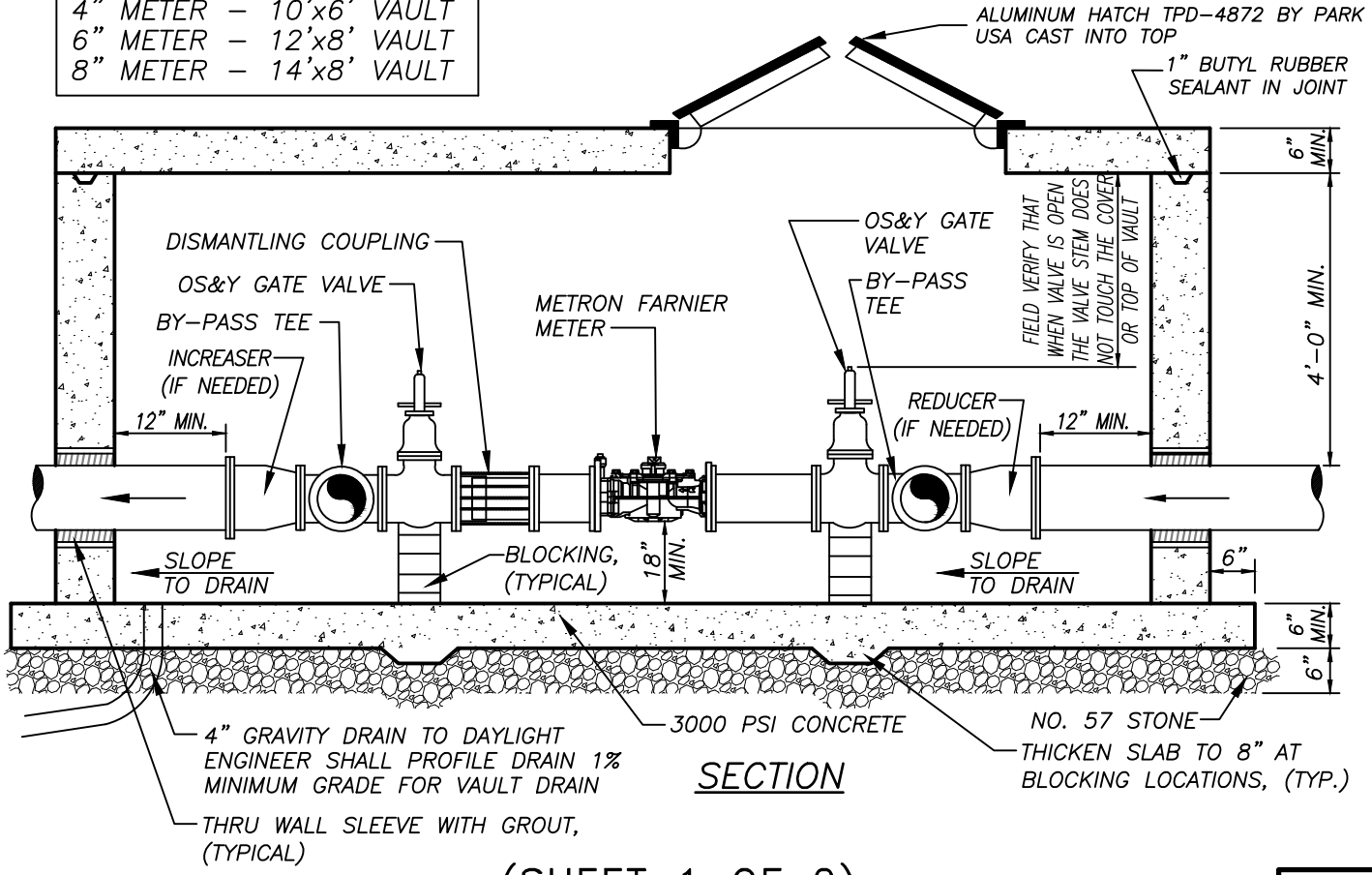

SECTION

(SHEET 1 OF 2)

W-21

CITY OF MEBANE STANDARD	3" - 8" METER ASSEMBLY WITH PRECAST METER VAULT		
	SCALE: N.T.S.	DATE: 7/1/21	DRAWN BY: WDF

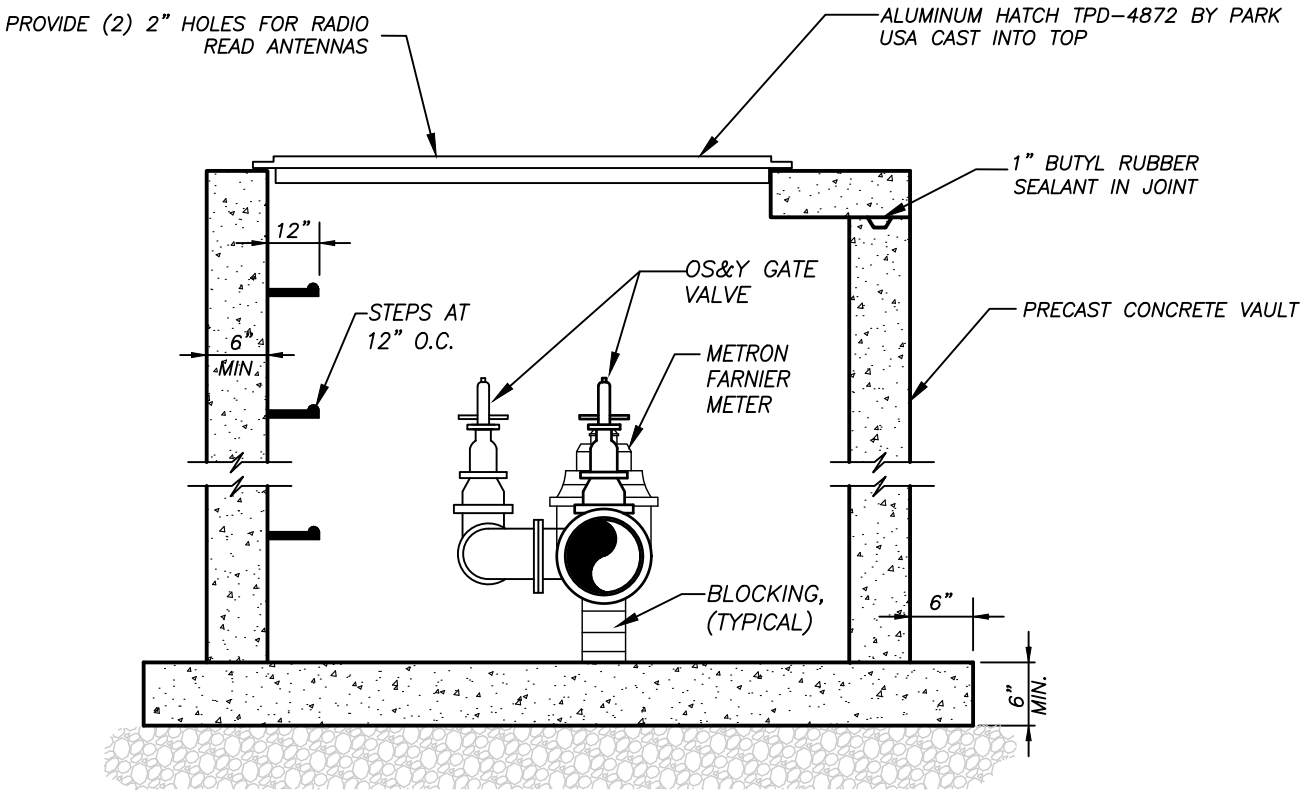

SECTION

NOTES:

1–VAULT WALLS TO BE THE MIN CONCRETE THICKNESS INDICATED, REINFORCED WITH NO. 4 REBAR ON 12" CENTERS EACH WAY, PLACED 2" FROM THE INSIDE WALL THE AMOUNT OF REINFORCING AND WALL THICKNESS MAY BE INCREASED FOR EXTRA DEPTH WALLS OR IN HEAVY TRAFFIC SITUATIONS AS REQUIRED BY THE ENGINEER.

2–SUBSTITUTE MATERIALS MAY BE USED AS APPROVED BY THE ENGINEER.

3–REINFORCED CONCRETE LID WITH TRAFFIC BEARING DOORS H–20 LOADING TO BE USED IN TRAFFIC SITUATIONS.

4–PROVIDE A THRU WALL SLEEVE AT OPENING IN CONCRETE OR CMU WALL LARGE ENOUGH FOR FLANGE OF PIPE TO PASS THRU. FILL VOID BETWEEN PIPE AND SLEEVE WITH NON SHRINK GROUT.

5–PIPE OUTSIDE VAULT TO BE M.J. WITH RETAINER GLANDS.

6–ALL CLEARANCE DIMENSIONS ARE MINIMUMS.

7–ALL JOINTS TO BE FLANGED THROUGH OUT VAULT.

8–STEPS ARE TO BE INSTALLED IN ALL VAULTS EXCEEDING 4 FEET DEEP AT A LOCATION FOR EASE OF ACCESS. LOCATE DOOR OVER STEPS. CONTRACTOR TO COORDINATE SIZE OF VAULT TO THE SIZE OF VAULT DOOR TO WORK PROPERLY.

9–CONCRETE TO BE A MINIMUM OF 3000 PSI.

10–ALL METERS MUST BE INSTALLED LEVEL.

11–ALL VALVES GREATER THAN 2" SHALL BE OS&Y VALVES.

12–ADDITIONAL BACKFLOW PREVENTION WILL BE REQUIRED ON ALL 3" – 8" METERS.

13–DISMANTLING COUPLING SHALL BE A SMITH BLAIR INC., 970 SERIES OR APPROVED EQUAL.

(SHEET 2 OF 2)

W-22

CITY OF MEBANE STANDARD	3" - 8" METER ASSEMBLY WITH PRECAST METER VAULT		
	SCALE: N.T.S.	DATE: 7/1/21	DRAWN BY: WDF

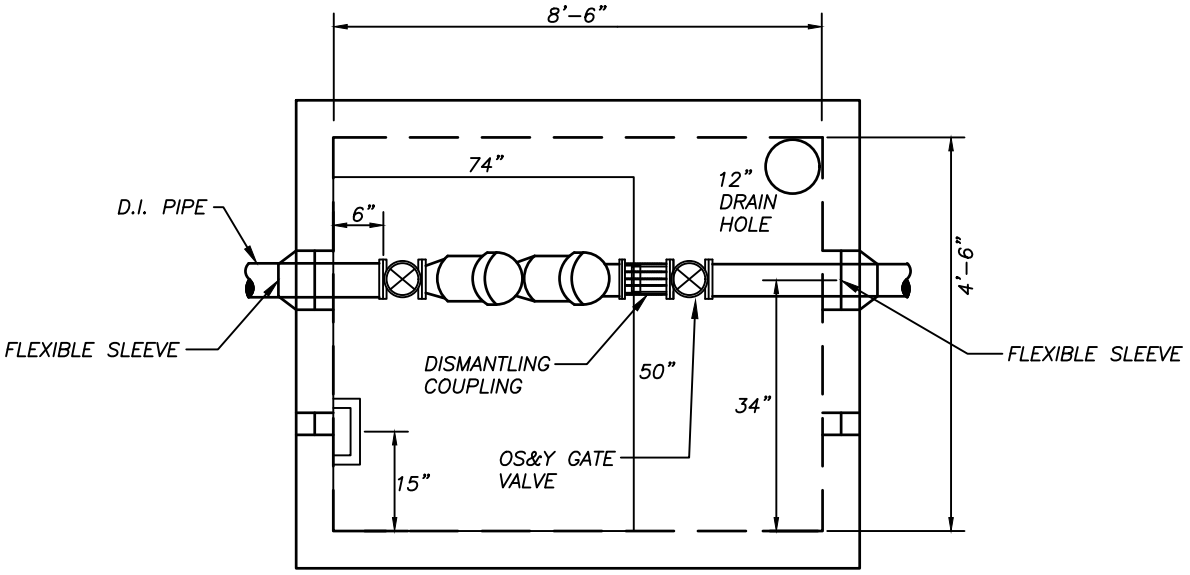

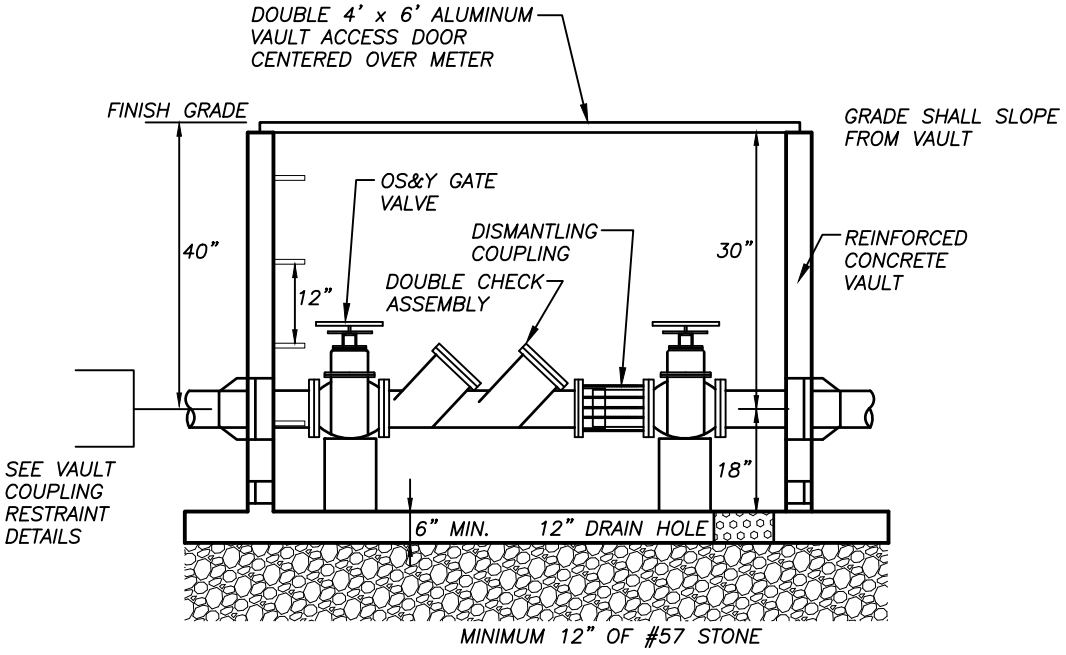

W-23

CITY OF MEBANE STANDARD	LARGE BACKFLOW PREVENTER DOUBLE CHECK ASSEMBLY		
	SCALE: N.T.S.	DATE: 7/1/21	DRAWN BY: WDF

NOTES

MANHOLES OVER 3'-6" IN DEPTH SHALL BE PROVIDED WITH STEPS 1'-0" ON CENTERS.

ON NEW INSTALLATION A MAXIMUM OF (2) GRADE RINGS SHALL BE USED.

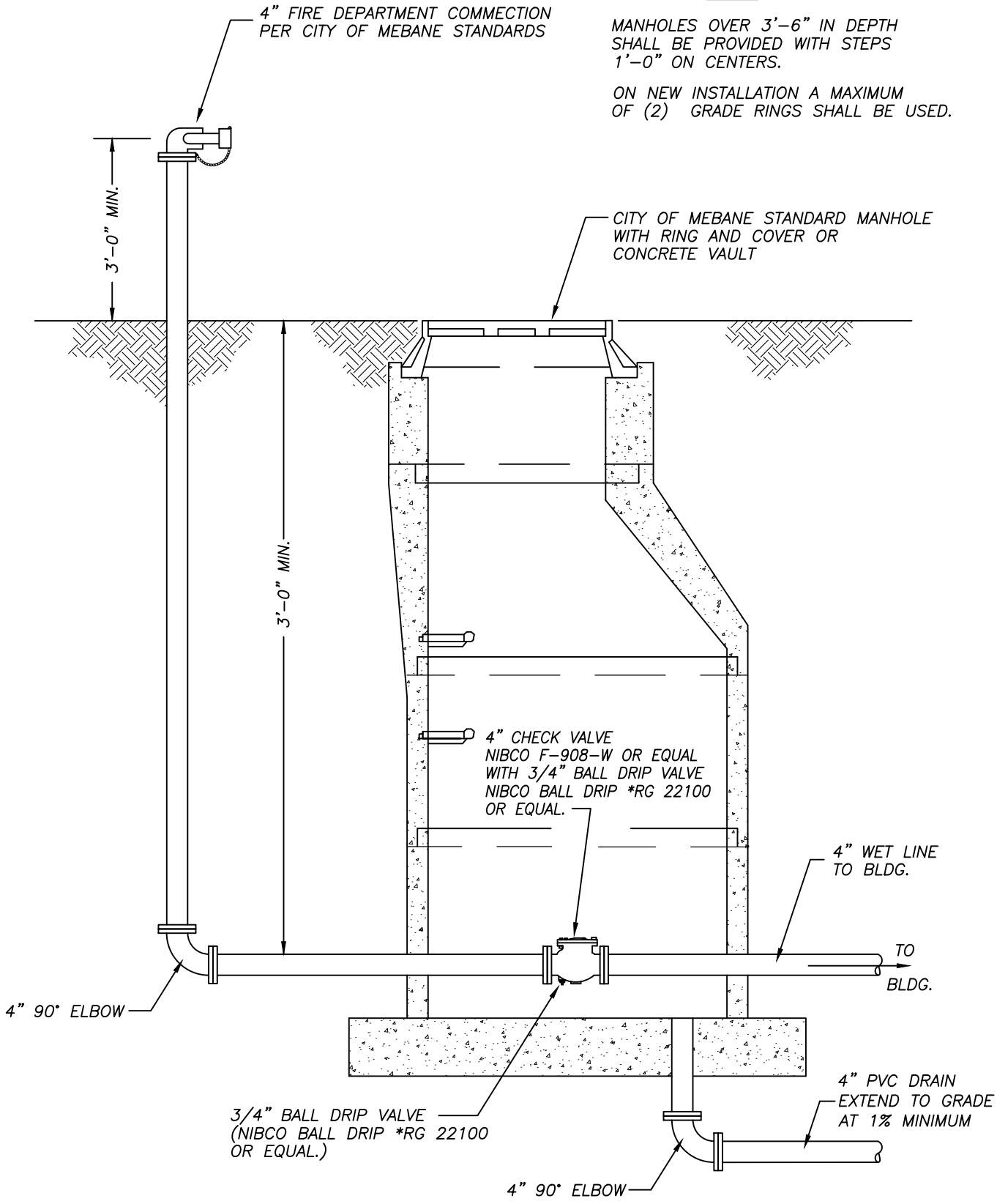

SECTION THRU MANHOLE

W-24

CITY OF MEBANE STANDARD	4" FIRE DEPARTMENT CONNECTION WITH CHECK VALVE ASSEMBLY		
	SCALE: N.T.S.	DATE: 7/1/21	DRAWN BY: WDF

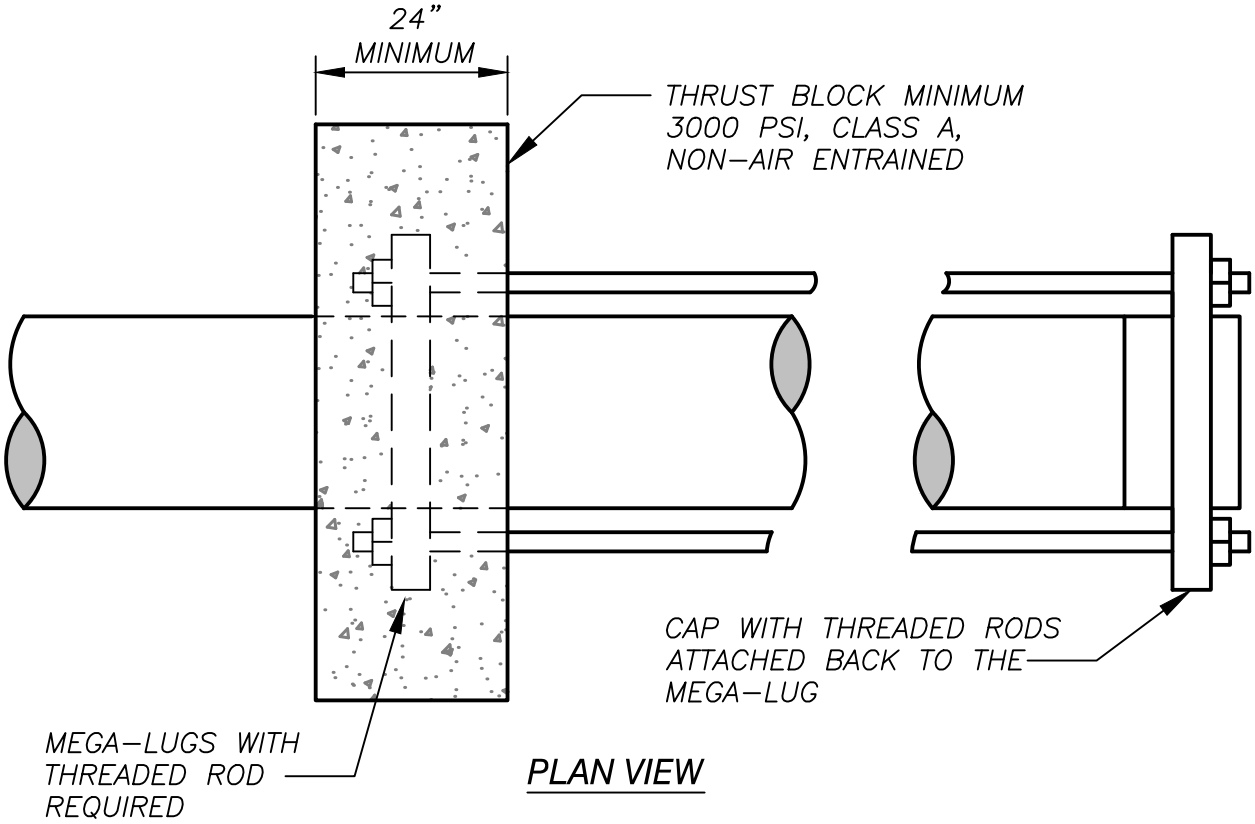

PLAN VIEW

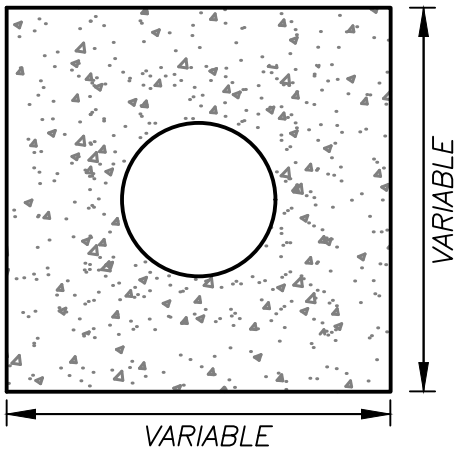

FRONT VIEW

MINIMUM CUBIC YARDS OF CONCRETE	
PIPE DIAMETER	CUBIC YARDS
6"	1
8"	2
10"	3
12"	5
16"	7.25

W-25

CITY OF MEBANE STANDARD

END OF LINE
DEADMAN DETAIL

SCALE: N.T.S. | DATE: 7/1/21 | DRAWN BY: WDF

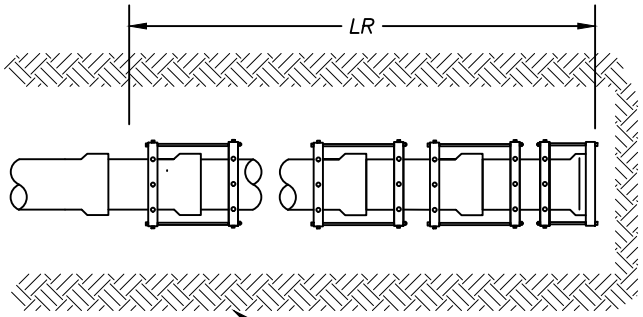

DEAD ENDS

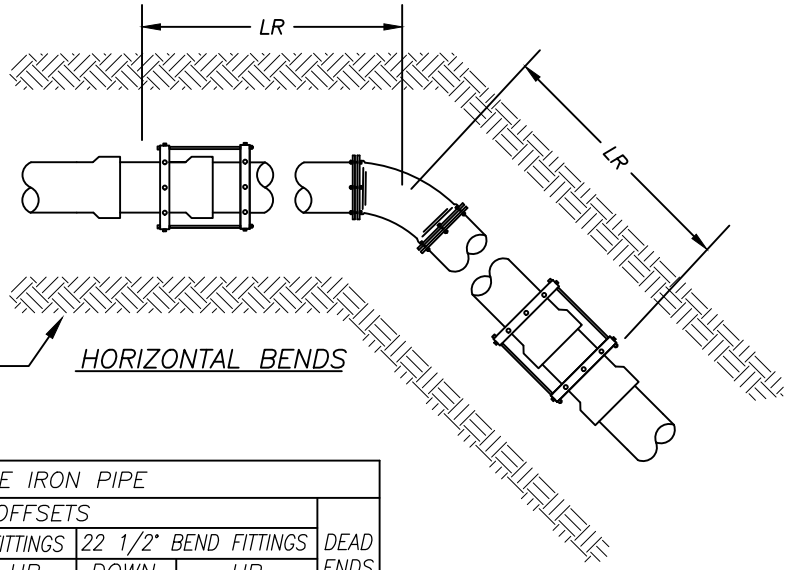

HORIZONTAL BENDS

UNDISTURBED SOIL

RESTRAINED LENGTHS, LR, FOR DUCTILE IRON PIPE										
NOMINAL PIPE SIZE INCHES	HORIZONTAL BENDS			VERTICAL OFFSETS						DEAD ENDS
				90° BEND FITTINGS		45° BEND FITTINGS		22 1/2° BEND FITTINGS		
	90°	45°	22 1/2°	DOWN BEND	UP BEND	DOWN BEND	UP BEND	DOWN BEND	UP BEND	
4	18	7	4	31	18	13	7	6	3	31
6	25	10	5	44	25	18	10	9	5	44
8	32	13	6	58	32	24	13	11	6	58
10	38	16	8	69	38	29	16	14	8	69
12	45	19	9	81	45	34	19	16	9	81

NOTES

1. ALL JOINTS WITHIN THE SPECIFIED LENGTH, LR, MUST BR RESTRAINED. ALL LENGTHS ARE GIVEN IN FEET.
2. THE MAXIMUM TEST PRESSURE SHALL NOT EXCEED 200 PSI.
3. THE MINIMUM DEPTH OF BURY SHALL BE 3' TO TOP OF PIPE.
4. RESTRAINED LENGTHS MAY BE REDUCED WHEN SUPPORTED BY ENGINEERING CALCULATIONS.
5. RESTRAINT SYSTEMS SHALL BE INSPECTED AND APPROVED PRIOR TO BACKFILLING.
6. MECHANICAL RESTRAINTS FOR PIPE LARGER THAN 12" IN DIAMETER MUST BE DESIGNED BY A LICENSED ENGINEER AND APPROVED BY CITY ENGINEER.

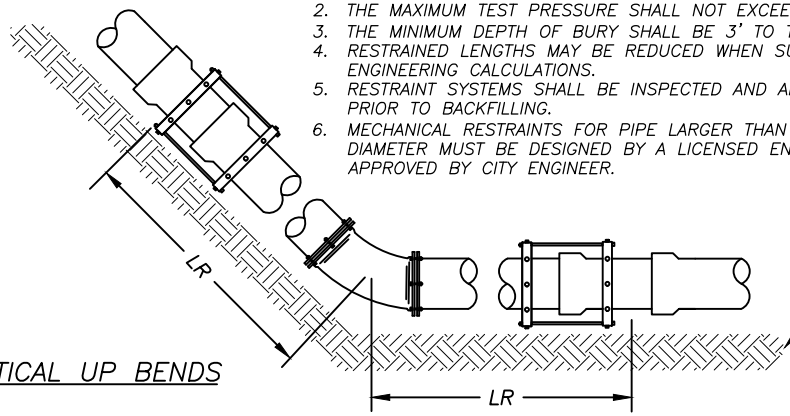

VERTICAL UP BENDS

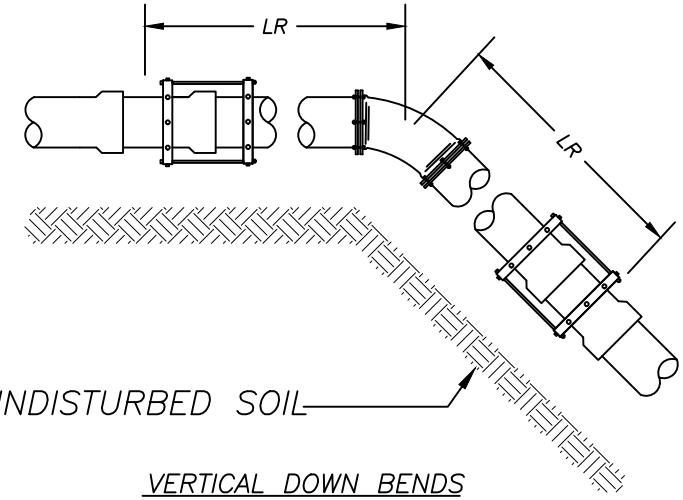

VERTICAL DOWN BENDS

UNDISTURBED SOIL

CITY OF MEBANE
STANDARD

JOINT RESTRAINT FOR
DUCTILE IRON PIPE

SCALE: N.T.S.
DATE: 7/1/21
DRAWN BY: WDF

W-26

CITY OF MEBANE STANDARD

2" HG-2 AUTOMATIC FLUSHER WITH 2" SPECTRUM 130D METER

SCALE: N.T.S.
DATE: 7/1/21
DRAWN BY: WDF

W-27

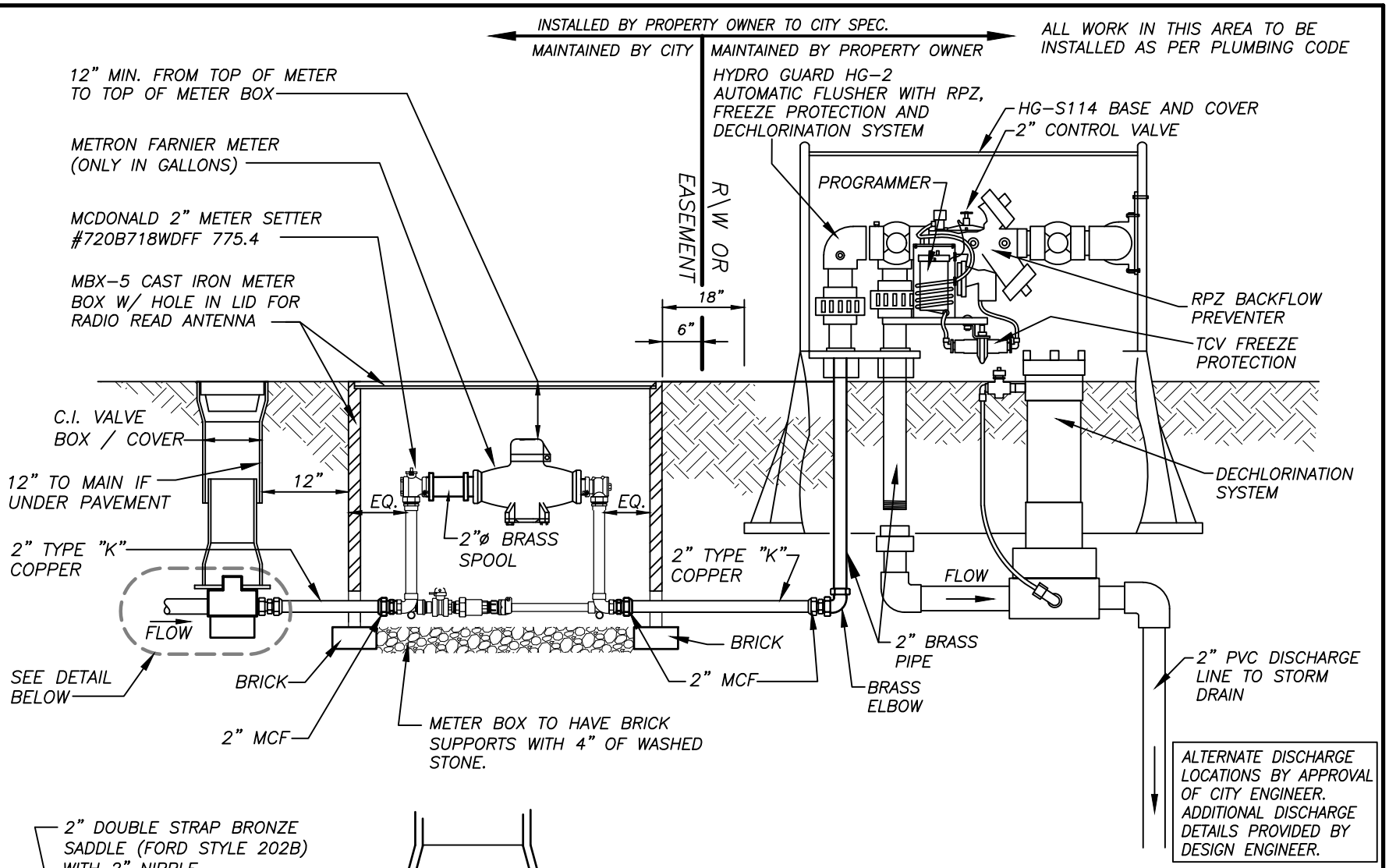

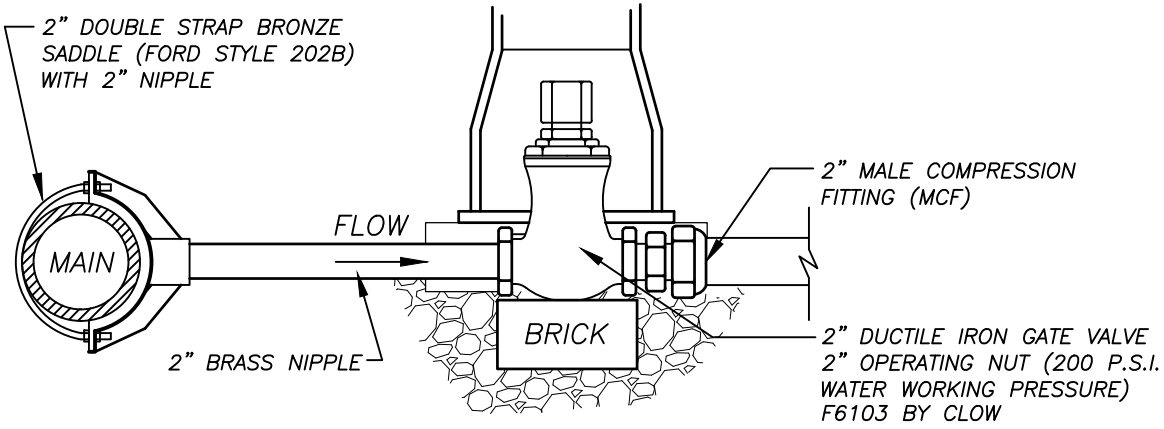

NOTE:

1) COMPRESSION FITTINGS ONLY, NO FLARED FITTINGS.

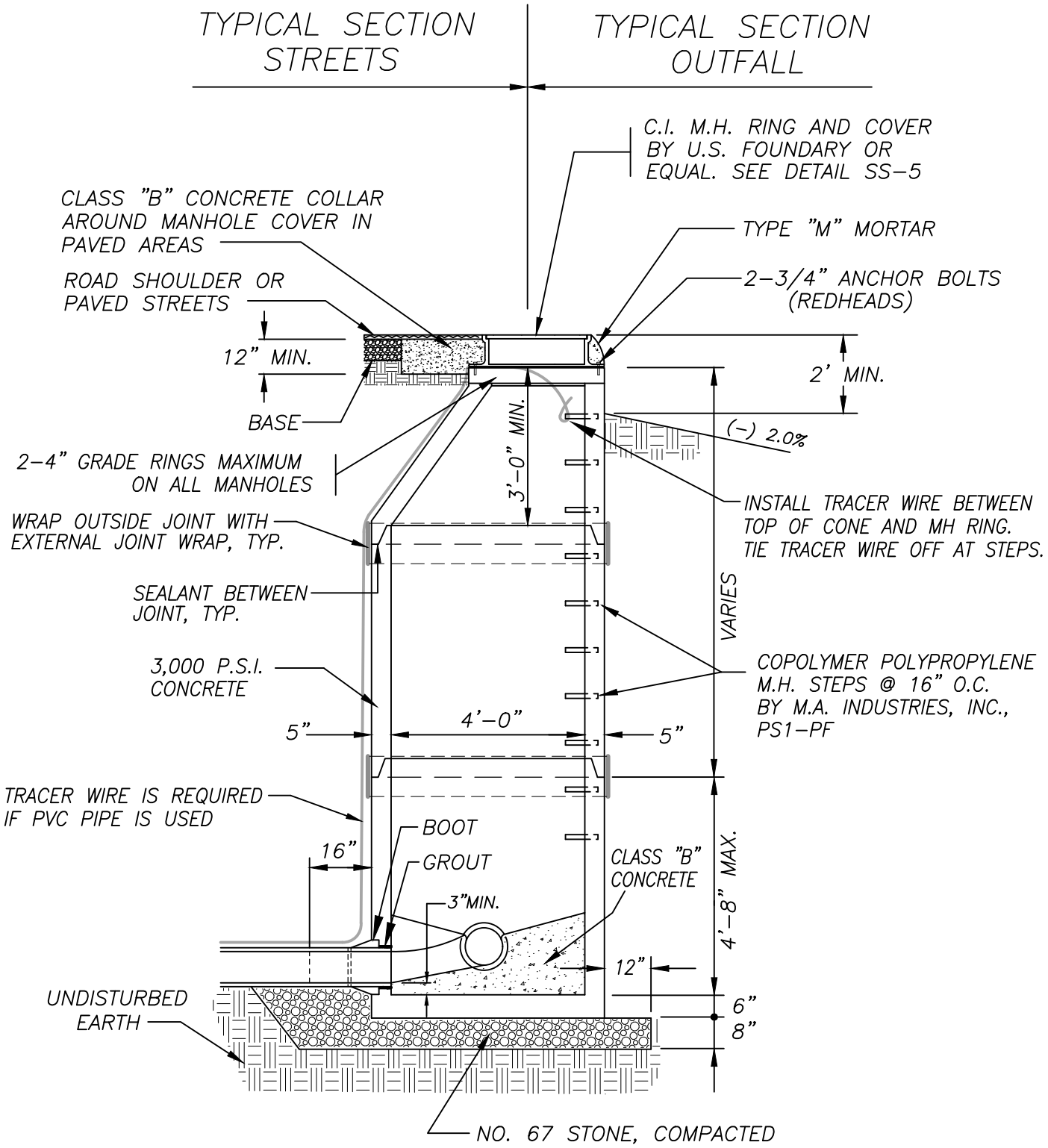

NOTES:
1. MANHOLES ARE TO BE AS MFG. N.C. PRODUCTS OR APPROVED EQUAL.
2. GROUT ALL JOINTS FROM INSIDE.

SS-1

CITY OF MEBANE STANDARD	STANDARD PRECAST MANHOLE		
	SCALE: N.T.S.	DATE: 7/1/21	DRAWN BY: WDF

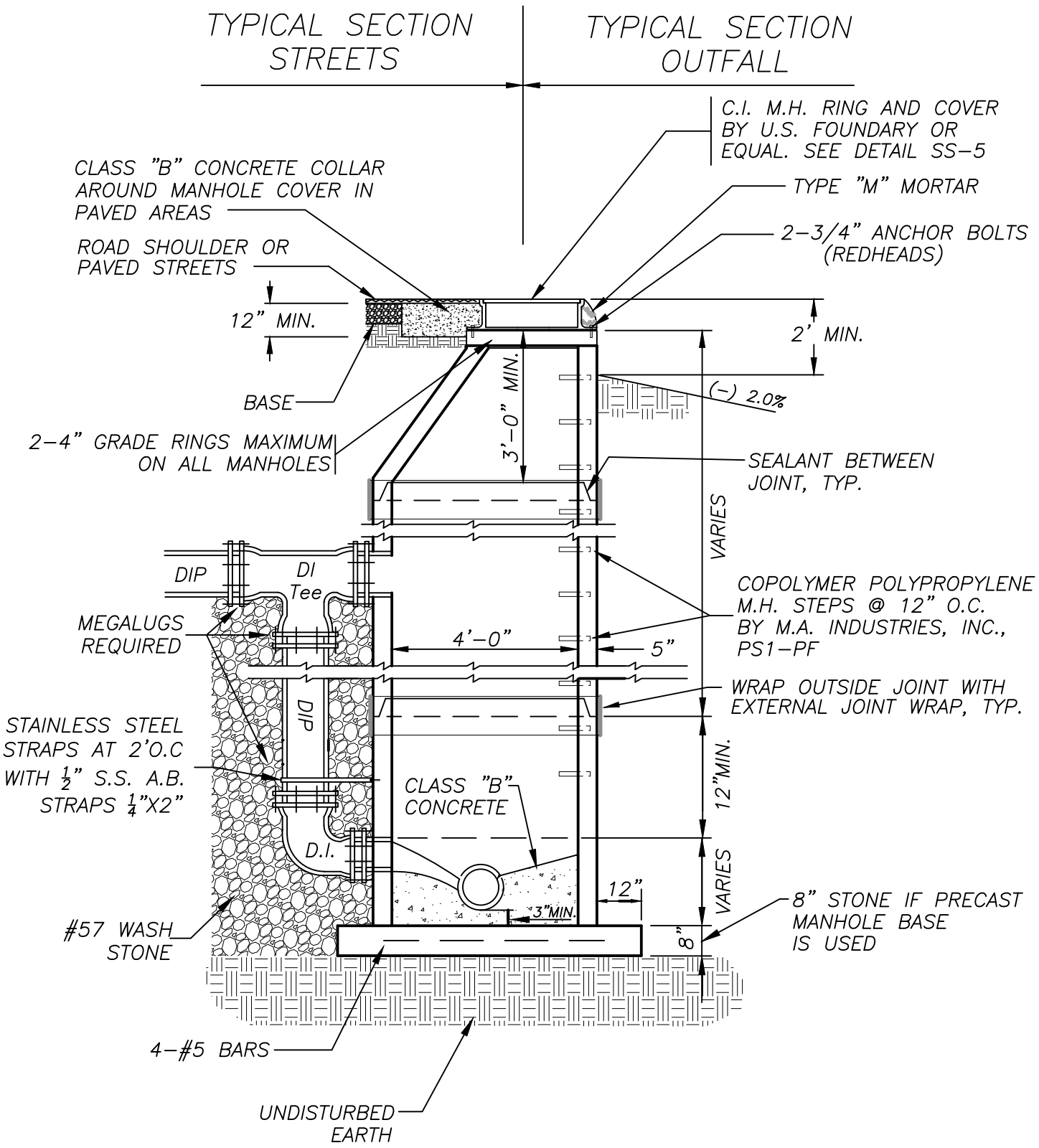

NOTES:
1. MANHOLES ARE TO BE AS MFG. N.C. PRODUCTS OR APPROVED EQUAL.
2. GROUT ALL JOINTS FROM INSIDE.

SS-2

CITY OF MEBANE STANDARD	STANDARD PRECAST DROP MANHOLE		
	SCALE: N.T.S.	DATE: 7/1/21	DRAWN BY: WDF

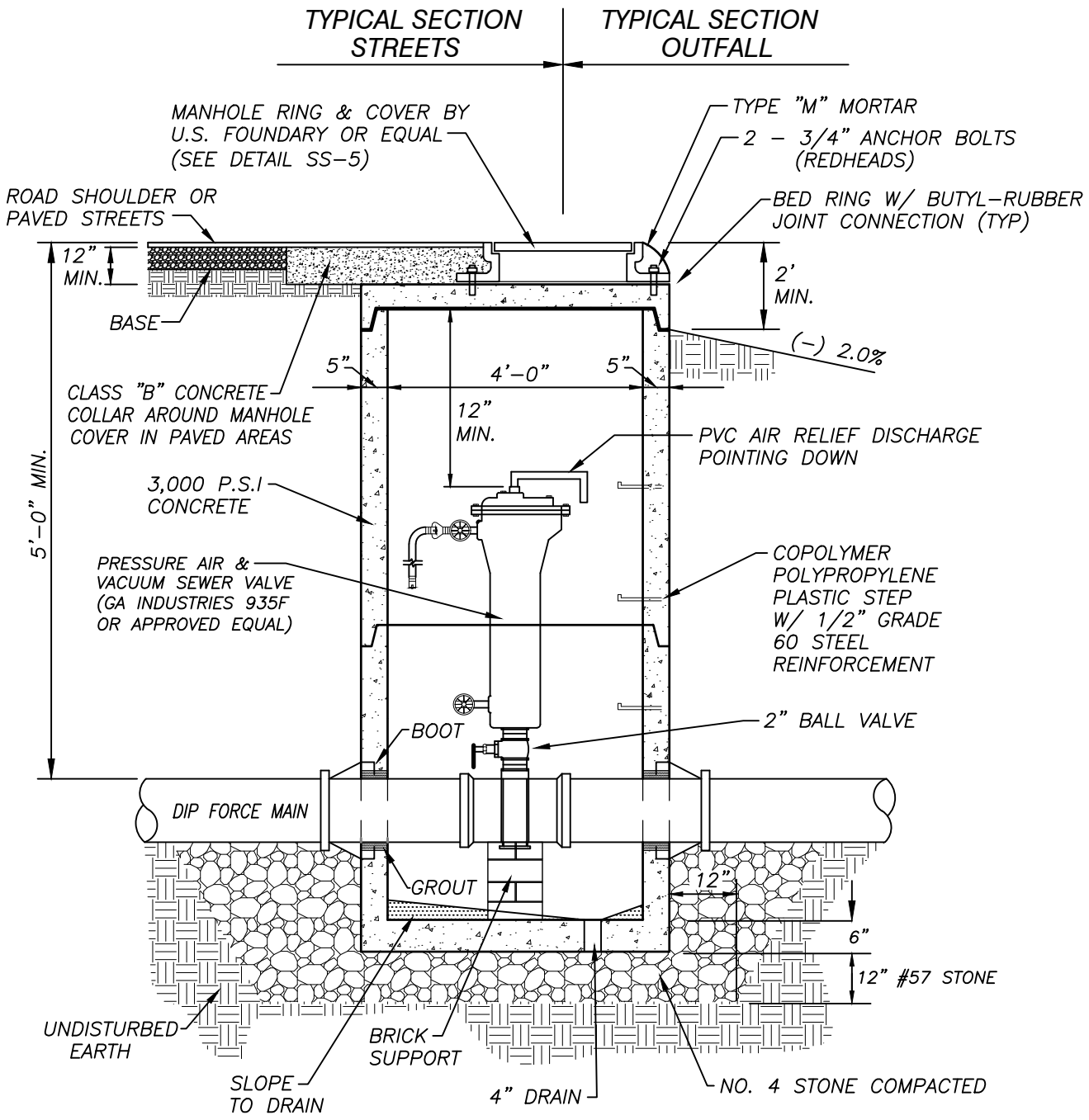

NOTES:
1. MANHOLES ARE TO BE AS MFG. N.C. PRODUCTS OR APPROVED EQUAL.
2. GROUT ALL JOINTS FROM INSIDE.

SS-3

CITY OF MEBANE STANDARD	SEWER AIR RELIEF MANHOLE WITH FLAT SLAB TOP		
	SCALE: N.T.S.	DATE: 7/1/21	DRAWN BY: WDF

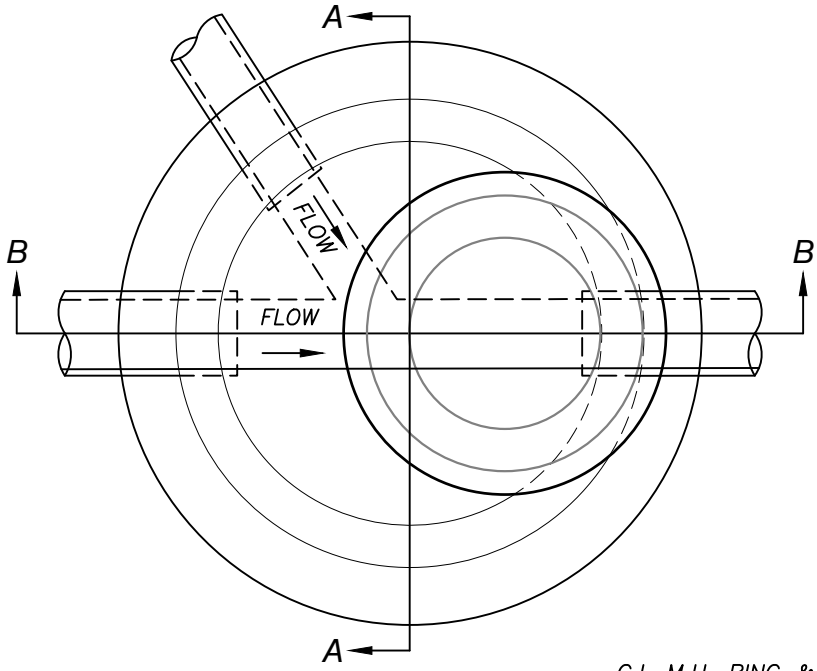

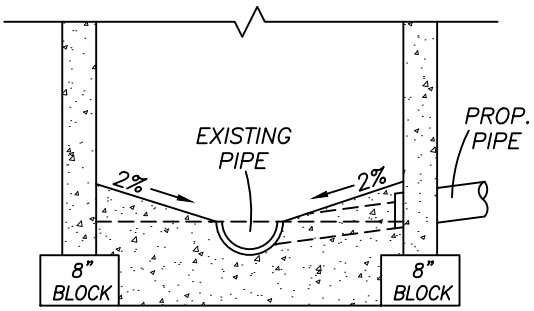

SECTION A-A

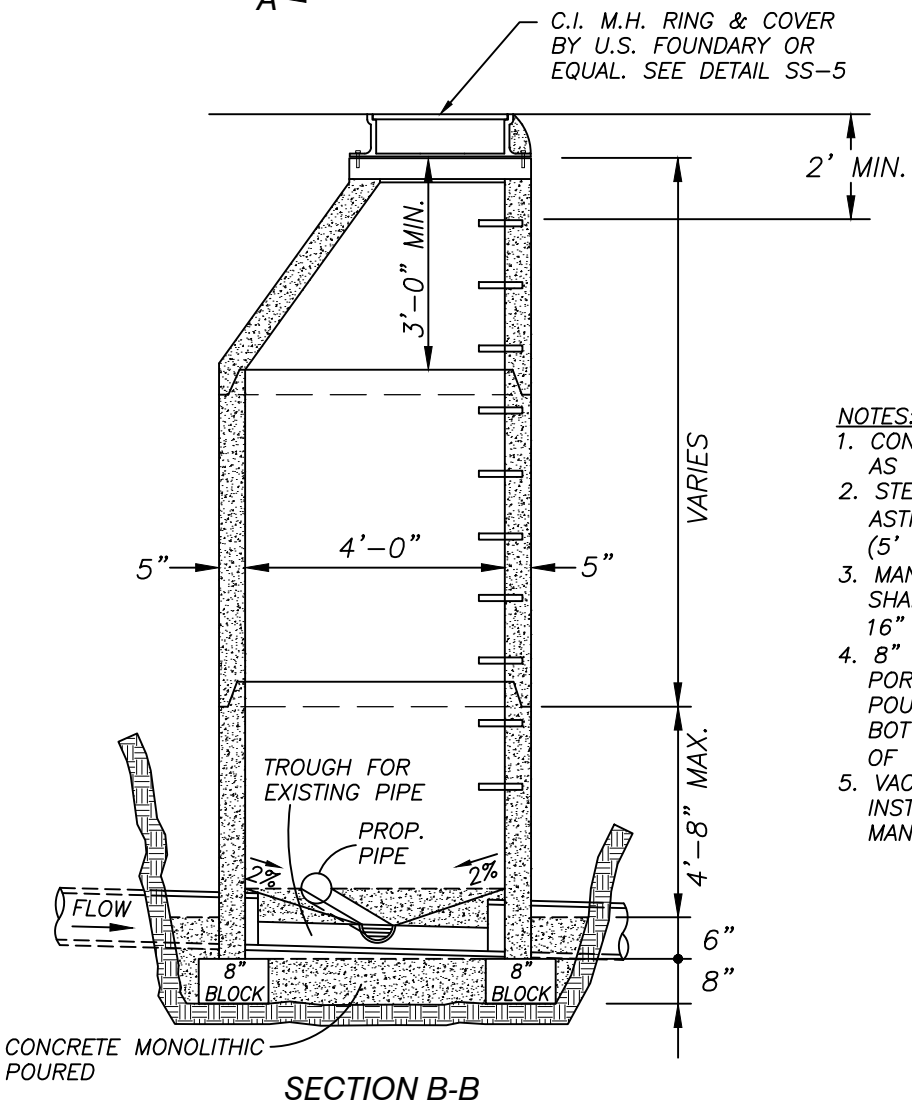

SECTION B-B

NOTES:

1. CONCRETE SHALL BE 3,000 PSI AS PER ASTM-478.
2. STEEL REINFORCING SHALL MEET ASTM-185 (4' DIA.) OR ASTM-478 (5' DIA.).
3. MANHOLES OVER 3'-6" IN DEPTH SHALL BE PROVIDED WITH STEPS 16" ON CENTERS.
4. 8" CONCRETE UNDER MANHOLE PORTIONS OF THE INVERT CAN BE POURED AT THE SAME TIME. BOTTOM SHOULD EXTEND A MIN. OF 6" BEYOND MANHOLE BASE.
5. VACUUM TEST REQUIRED ON ALL INSTALLATIONS PRIOR TO PUTTING MANHOLE INTO SERVICE.

SS-4

CITY OF MEBANE STANDARD

ECCENTRIC PRECAST BOTTOMLESS MANHOLE OVER EXISTING SANITARY SEWER (DOGHOUSE MANHOLE)

SCALE: N.T.S.	DATE: 7/1/21	DRAWN BY: WDF

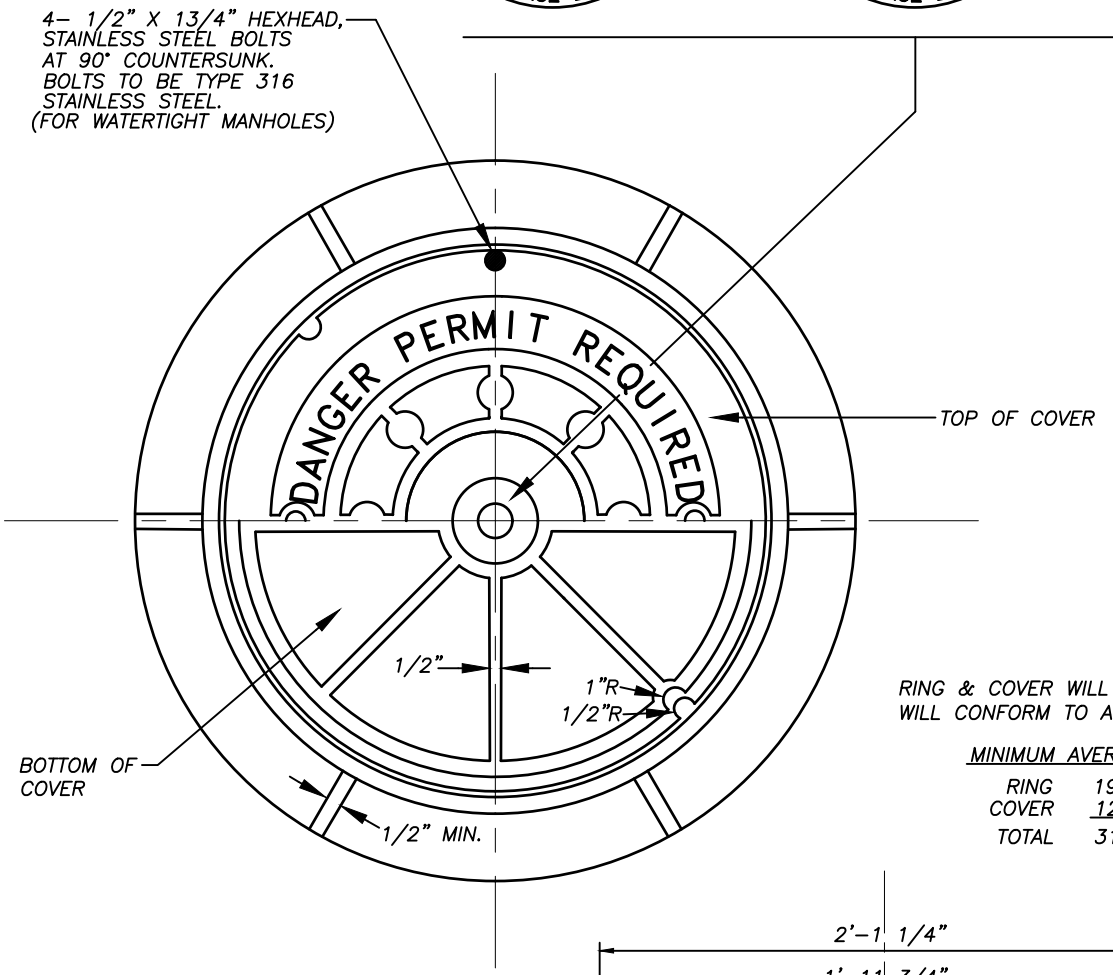

RING & COVER WILL BE MACHINED AND WILL CONFORM TO ASTM A48, CLASS 30B

MINIMUM AVERAGE WEIGHTS

RING	190 LBS.
COVER	120 LBS.
TOTAL	310 LBS.

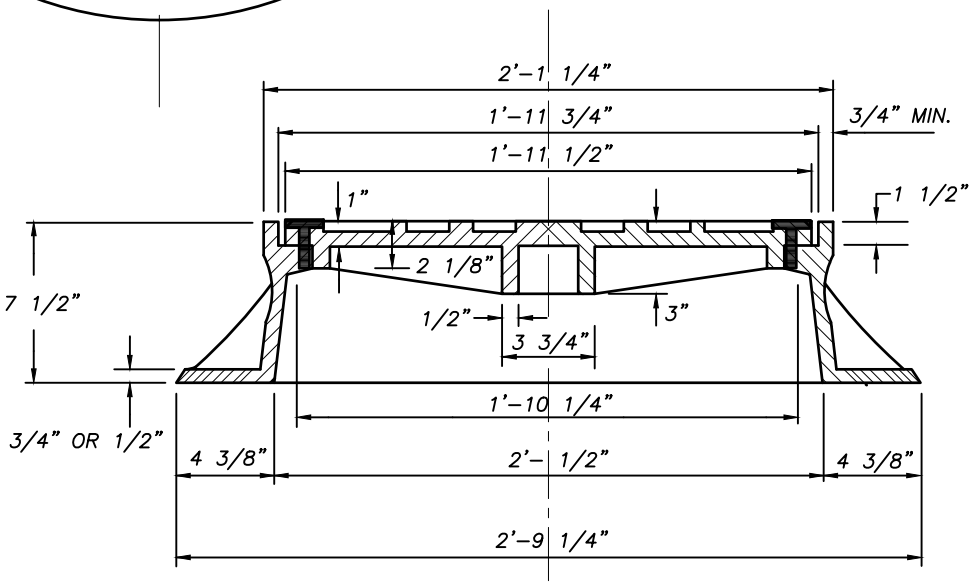

SS-5

CITY OF MEBANE STANDARD	MANHOLE RING & COVER		
	SCALE: N.T.S.	DATE: 7/1/21	DRAWN BY: WDF

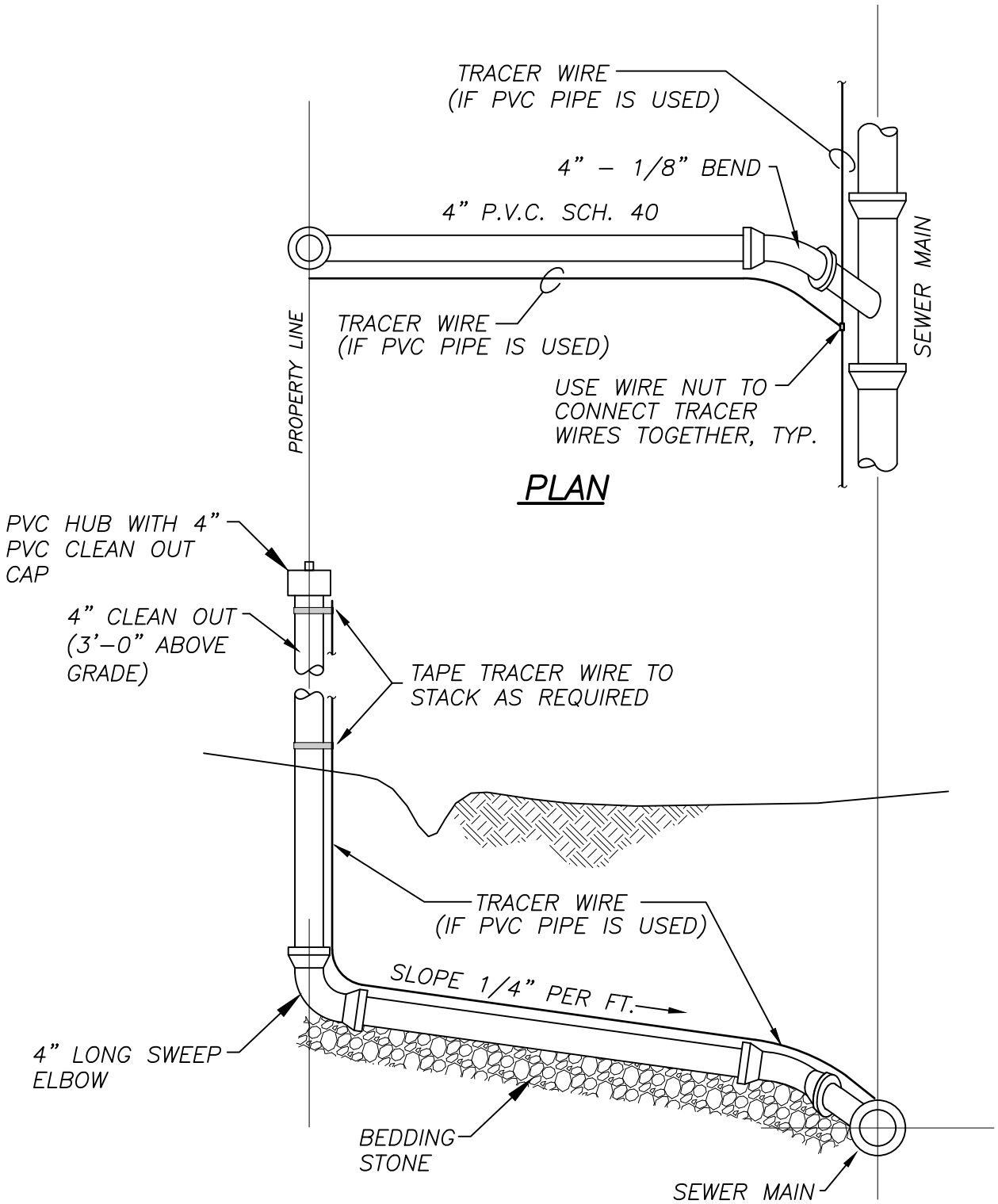

NOTE: PLUMBER TO CONNECT TO STUB–OUT/STACK AND LOWER CLEAN–OUT CAP TO GROUND LEVEL

SS-6

CITY OF MEBANE STANDARD	SEWER SERVICE CONNECTION		
	SCALE: N.T.S.	DATE: 7/1/21	DRAWN BY: WDF

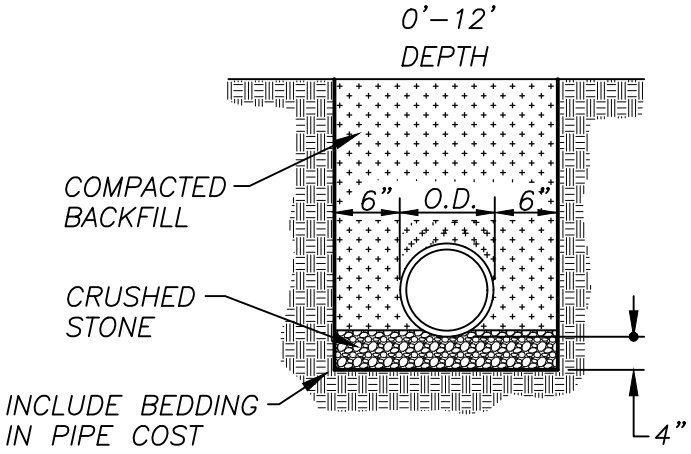

CLASS "C" BEDDING

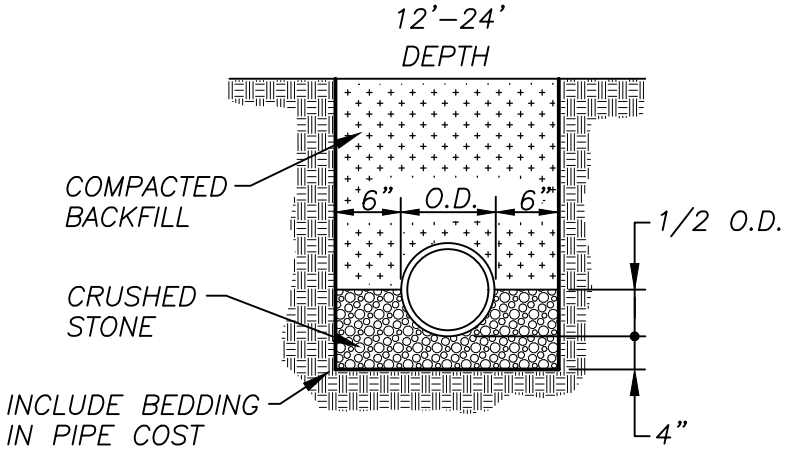

CLASS "B" BEDDING

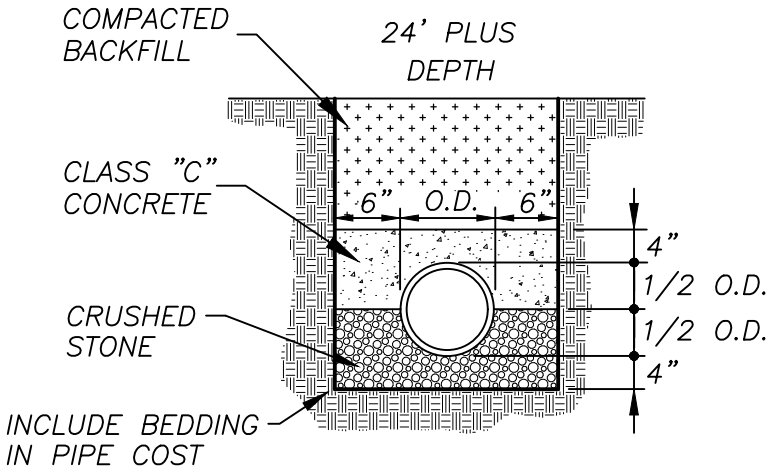

CLASS "A" BEDDING

SS-7

CITY OF MEBANE STANDARD	SANITARY SEWER BEDDING		
	SCALE: N.T.S.	DATE: 7/1/21	DRAWN BY: WDF

NOTES:

1. REBAR BENDS NOT TO BE BENT BY HEAT.
2. ALL CONCRETE TO BE AIR ENTRAINED CLASS 'A'.
3. PROVIDE 1/8" TO 1/2" NEOPRENE PAD BETWEEN PIPE AND CONCRETE.
4. ALL HARDWARE TO BE STAINLESS STEEL.
5. FOUNDATION SOIL SHALL HAVE A MINIMUM SOIL BEARING PRESSURE OF 2000 PSI TO BE FIELD VERIFIED BY GEOTECHNICAL ENGINEER.
6. WHERE SHALLOW ROCK IS FOUND TO EXIST, PIN FOOTING TO ROCK BY DRILLING & EPOXYING DOWELS INTO THE ROCK.
7. ALL PIPE THAT IS TO BE SUPPORTED ON A PIER SHALL BE FLANGED DIP. INCLUDE PROVISIONS FOR EXPANSION AS DIRECTED BY ENGINEER.
8. ALL PIERS SHALL BE DESIGNED AND SUBMITTED (ALONG WITH DOCUMENTATION SHOWING DESIGN PARAMETERS, ASSUMPTIONS, AND SAFETY FACTORS USED TO RESIST THE FORCES ACTING ON THE PIER/PIPE SYSTEM) AS PART OF THE PLAN REVIEW PROCESS. ALL PIER DESIGNS MUST BE SIGNED AND SEALED BY A REGISTERED NORTH CAROLINA PROFESSIONAL ENGINEER.
9. LOCATION OF ALL JOINTS TO BE DETERMINED BY THE DESIGN ENGINEER. A DETAIL OF THE ENTIRE PIER SYSTEM PROFILE SHALL BE INCLUDED IN THE DESIGN SUBMITTAL AS PART OF THE PLAN REVIEW PROCESS.

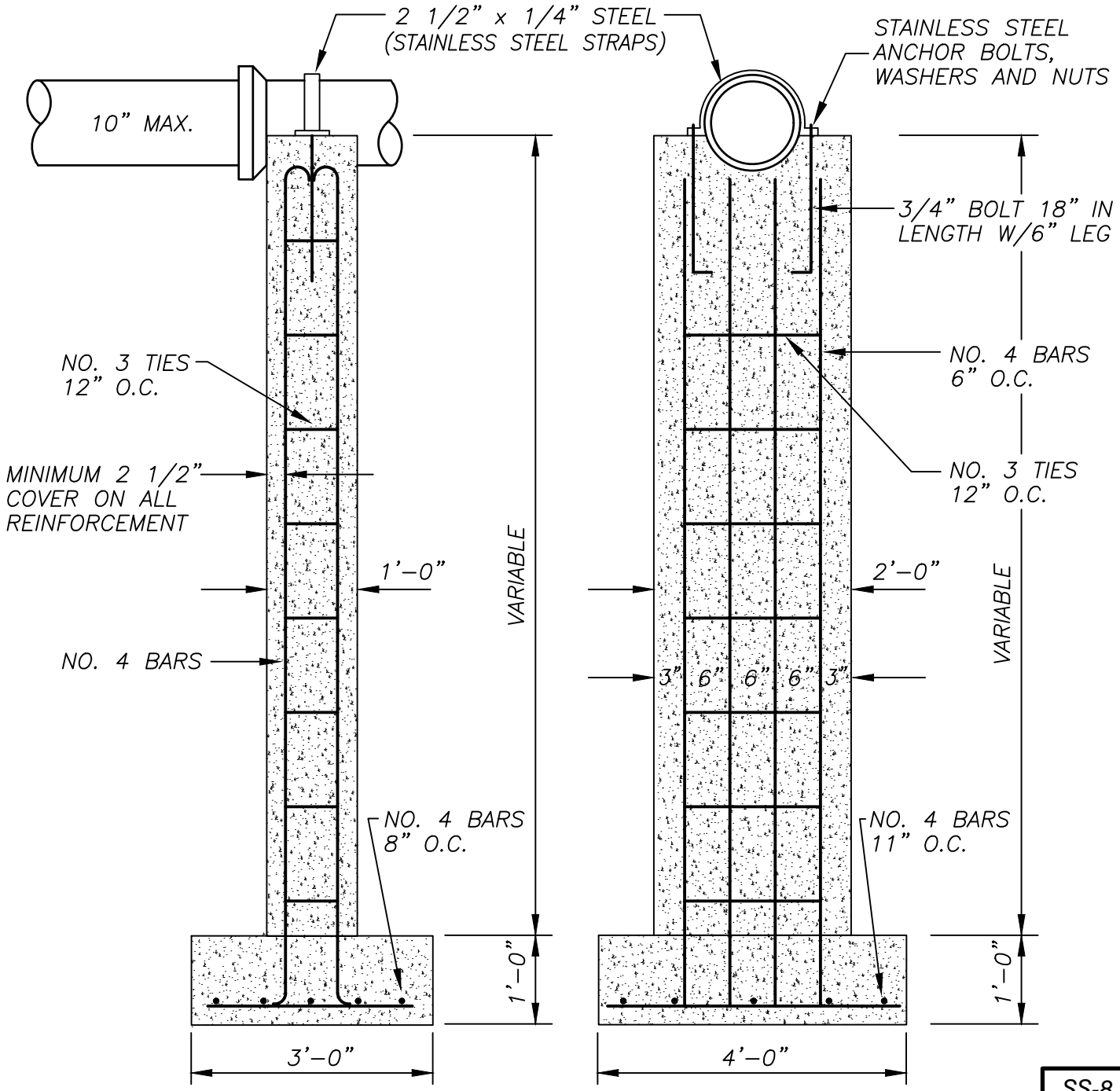

SS-8

CITY OF MEBANE STANDARD	CONCRETE PIER		
	SCALE: N.T.S.	DATE: 7/1/21	DRAWN BY: WDF

NOTES:

1. REBAR BENDS NOT TO BE BENT BY HEAT.
2. ALL CONCRETE TO BE AIR ENTRAINED CLASS 'A'.
3. PROVIDE 1/8" TO 1/2" NEOPRENE PAD BETWEEN PIPE AND CONCRETE.
4. ALL HARDWARE TO BE STAINLESS STEEL.
5. FOUNDATION SOIL SHALL HAVE A MINIMUM SOIL BEARING PRESSURE OF 2000 PSI TO BE FIELD VERIFIED BY GEOTECHNICAL ENGINEER.
6. WHERE SHALLOW ROCK IS FOUND TO EXIST, PIN FOOTING TO ROCK BY DRILLING & EPOXYING DOWELS INTO THE ROCK.
7. ALL PIPE THAT IS TO BE SUPPORTED ON A PIER SHALL BE FLANGED DIP. INCLUDE PROVISIONS FOR EXPANSION AS DIRECTED BY ENGINEER.
8. ALL PIERS SHALL BE DESIGNED AND SUBMITTED (ALONG WITH DOCUMENTATION SHOWING DESIGN PARAMETERS, ASSUMPTIONS, AND SAFETY FACTORS USED TO RESIST THE FORCES ACTING ON THE PIER/PIPE SYSTEM) AS PART OF THE PLAN REVIEW PROCESS. ALL PIER DESIGNS MUST BE SIGNED AND SEALED BY A REGISTERED NORTH CAROLINA PROFESSIONAL ENGINEER.
9. LOCATION OF ALL JOINTS TO BE DETERMINED BY THE DESIGN ENGINEER. A DETAIL OF THE ENTIRE PIER SYSTEM PROFILE SHALL BE INCLUDED IN THE DESIGN SUBMITTAL AS PART OF THE PLAN REVIEW PROCESS.

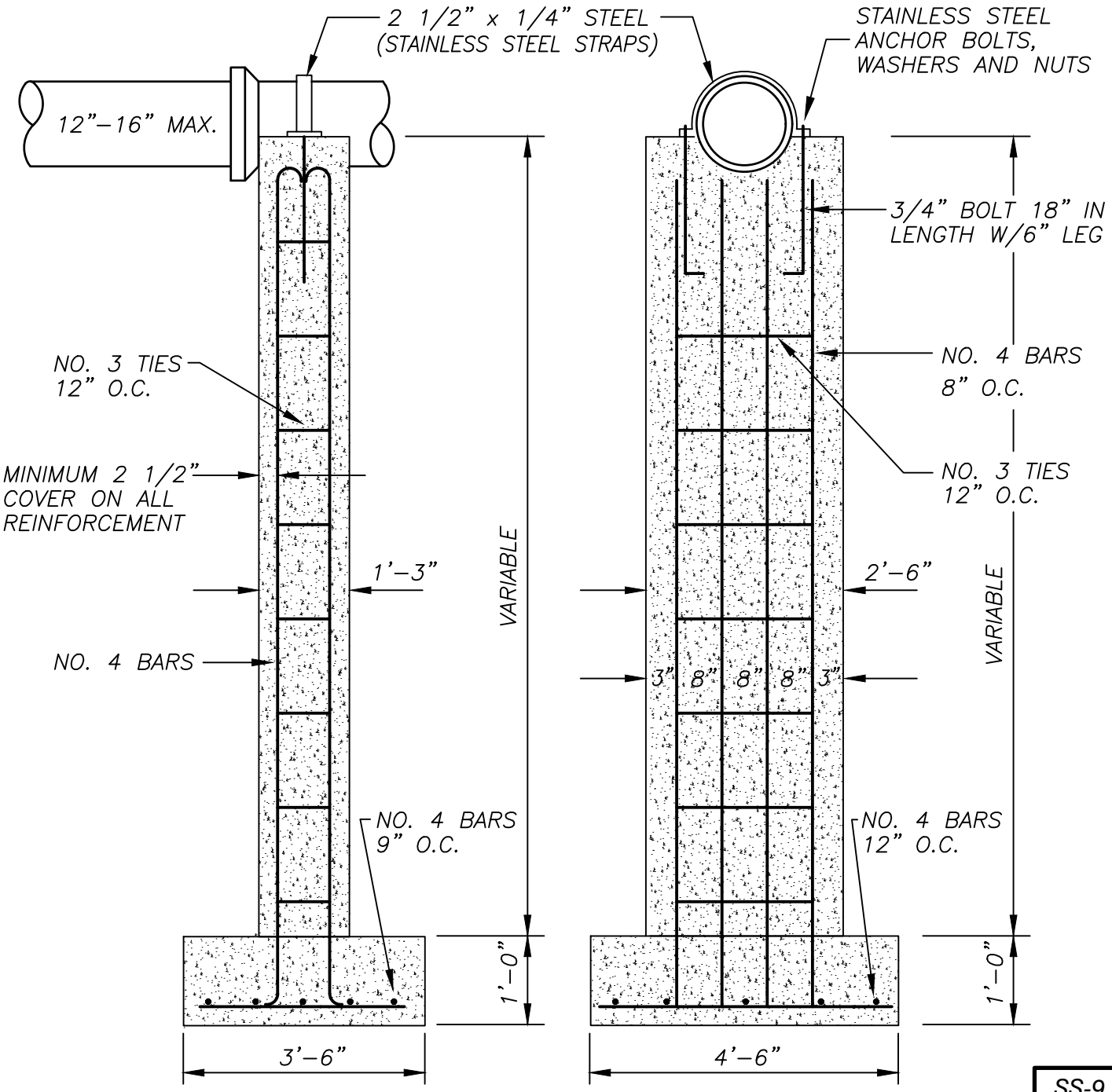

SS-9

CITY OF MEBANE STANDARD	CONCRETE PIER		
	SCALE: N.T.S.	DATE: 7/1/21	DRAWN BY: WDF

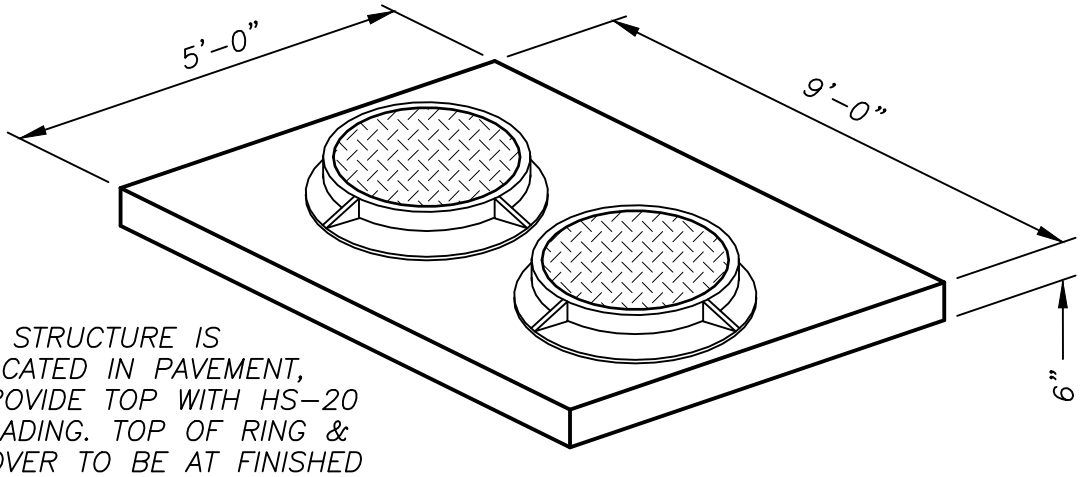

NOTE : IF STRUCTURE IS LOCATED IN PAVEMENT, PROVIDE TOP WITH HS-20 LOADING. TOP OF RING & COVER TO BE AT FINISHED GRADE.

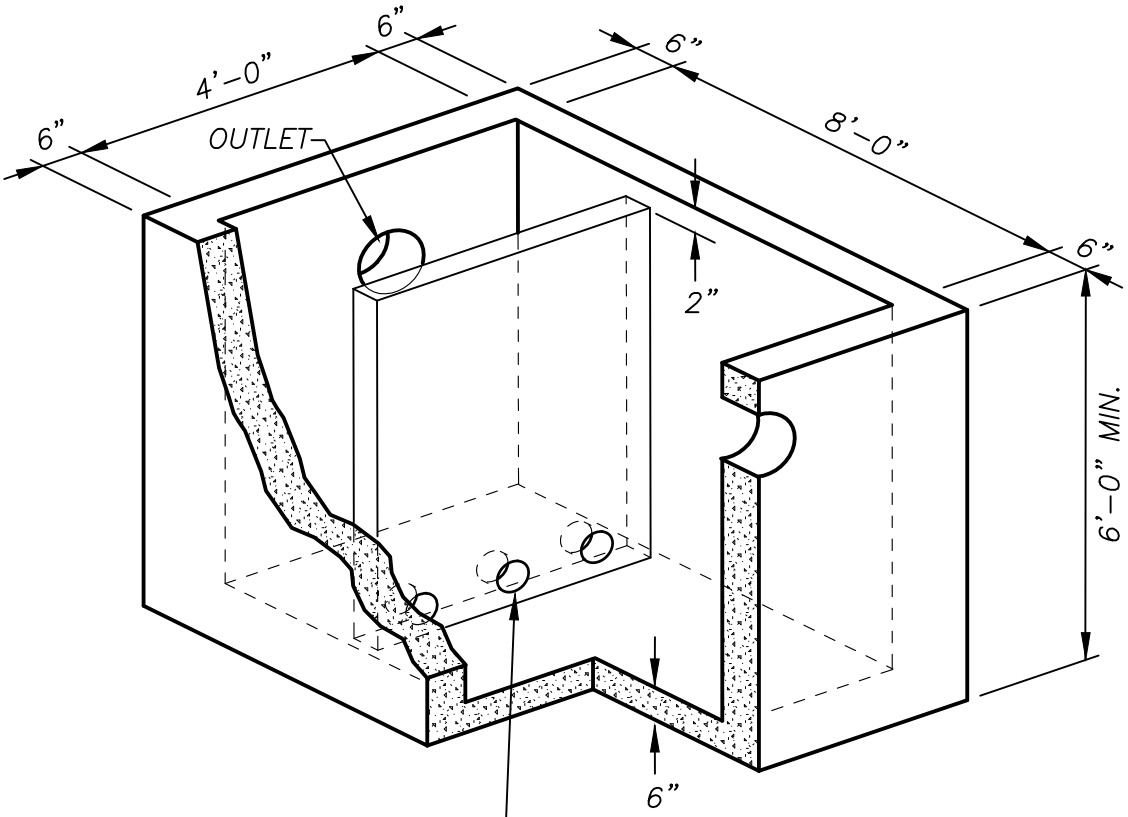

NOTE : PROVIDE REINFORCING AS APPROPRIATE FOR LOCATION.

SS-10

CITY OF MEBANE STANDARD	1,000 GALLON GREASE TRAP		
	SCALE: N.T.S.	DATE: 7/1/21	DRAWN BY: WDF

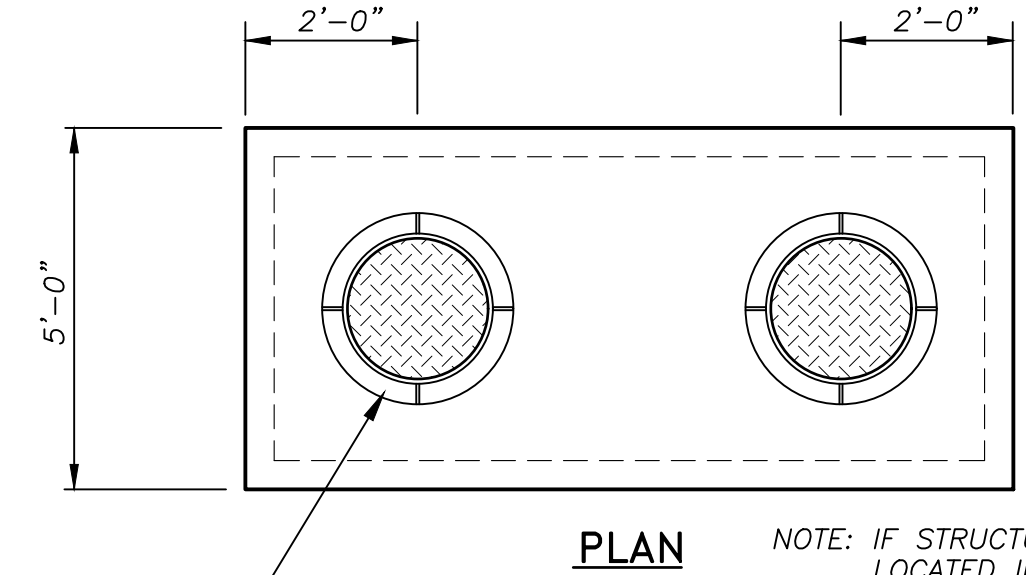

PLAN

NOTE: IF STRUCTURE IS LOCATED IN PAVEMENT, PROVIDE TOP WITH HS-20 LOADING. TOP OF RING & COVER TO BE AT FINISHED GRADE.

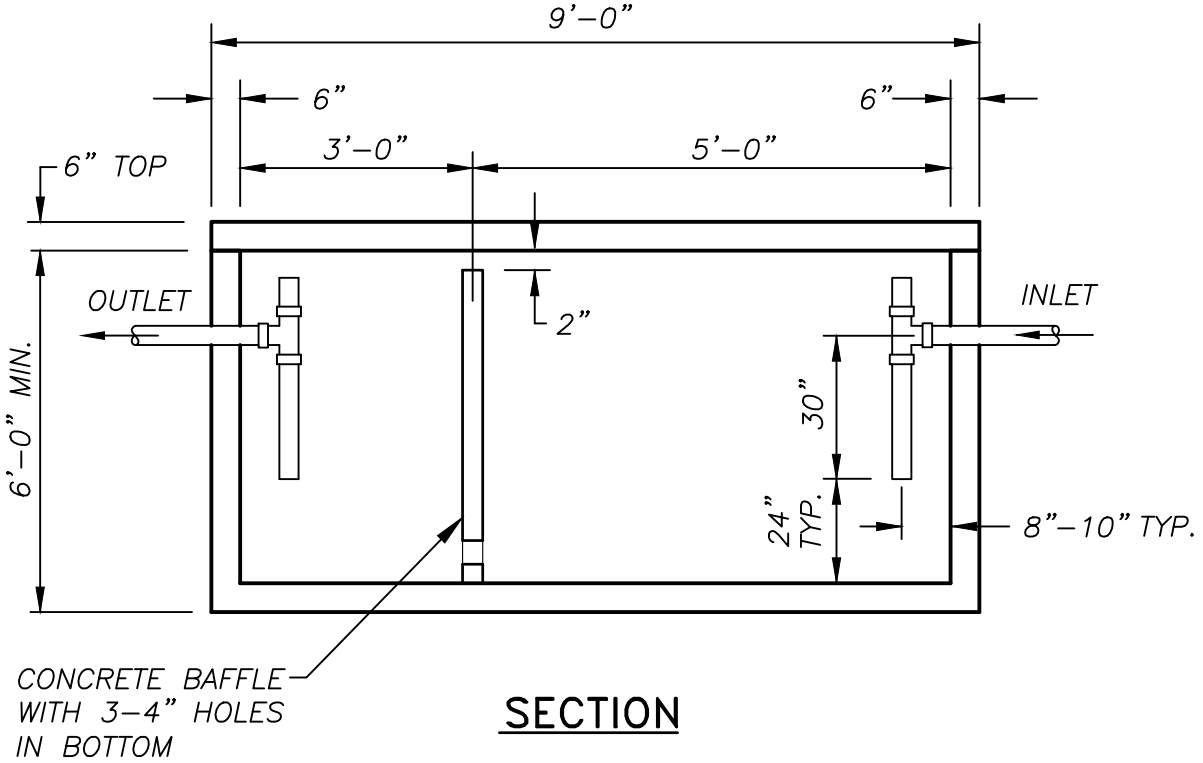

SECTION

NOTE: PROVIDE REINFORCING AS APPROPRIATE FOR LOCATION.

SS-11

CITY OF MEBANE STANDARD	1,000 GALLON GREASE TRAP		
	SCALE: N.T.S.	DATE: 7/1/21	DRAWN BY: WDF

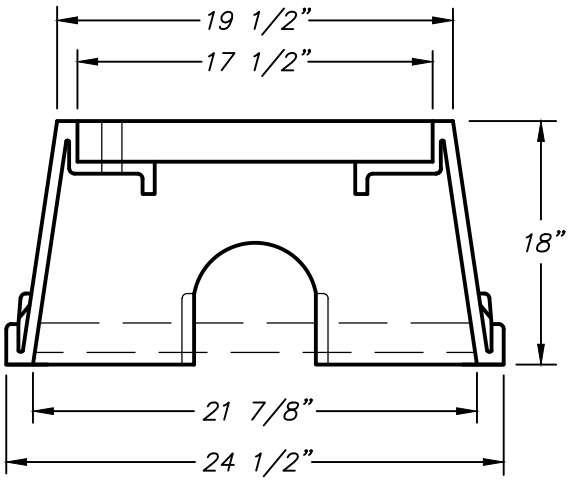

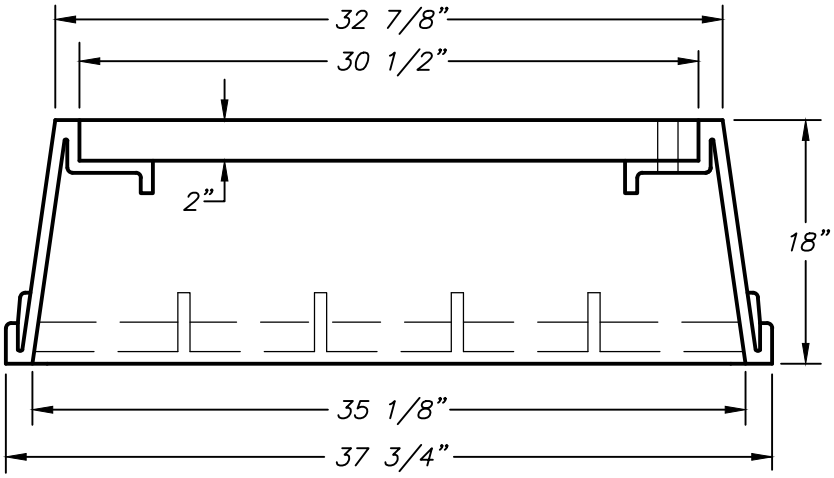

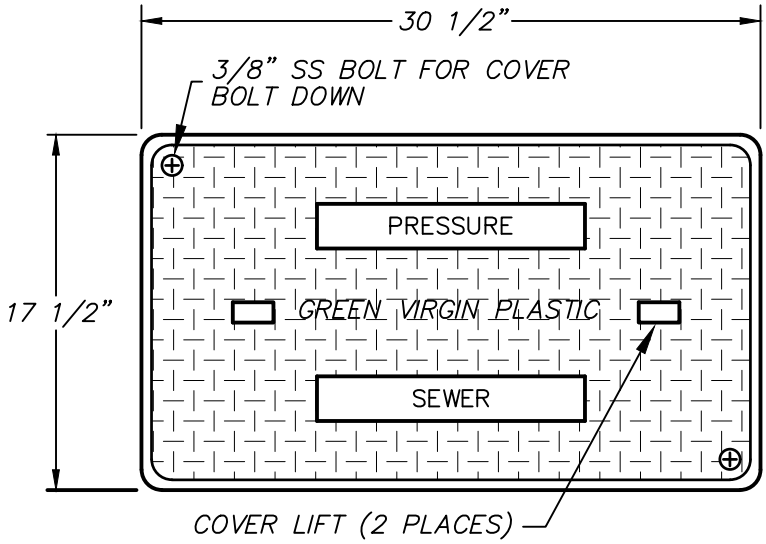

PLAN VIEW

SS-12

CITY OF MEBANE STANDARD	STANDARD PRESSURE SEWER METER BOX		
	SCALE: N.T.S.	DATE: 7/1/21	DRAWN BY: WDF

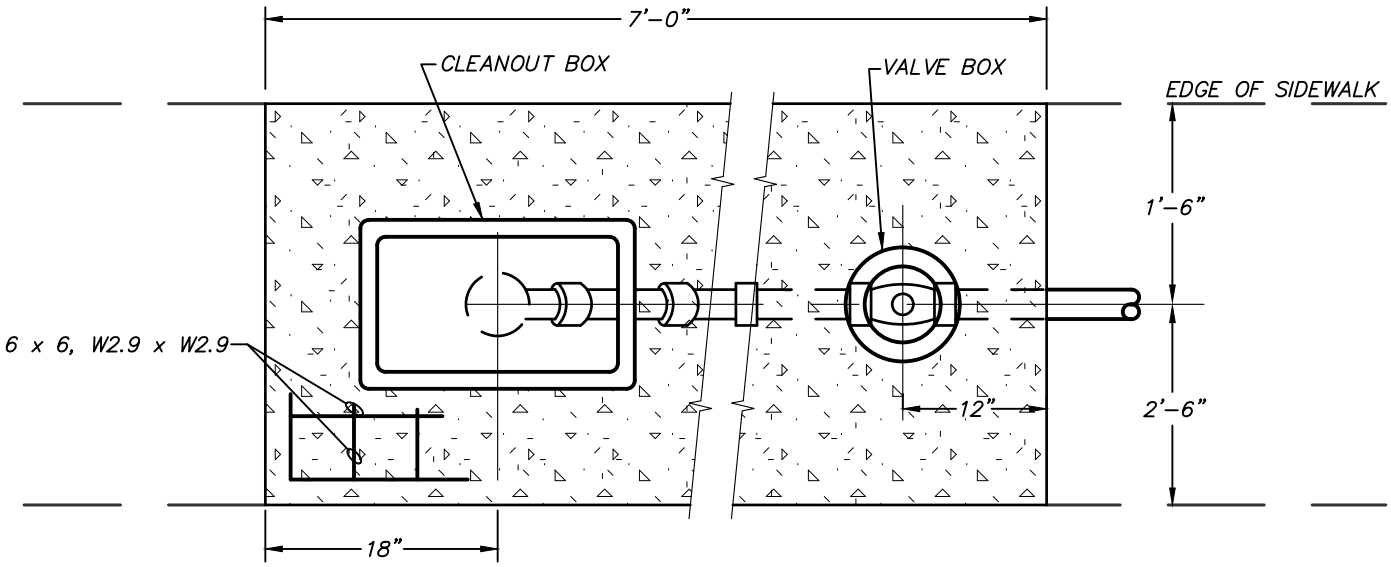

PLAN VIEW

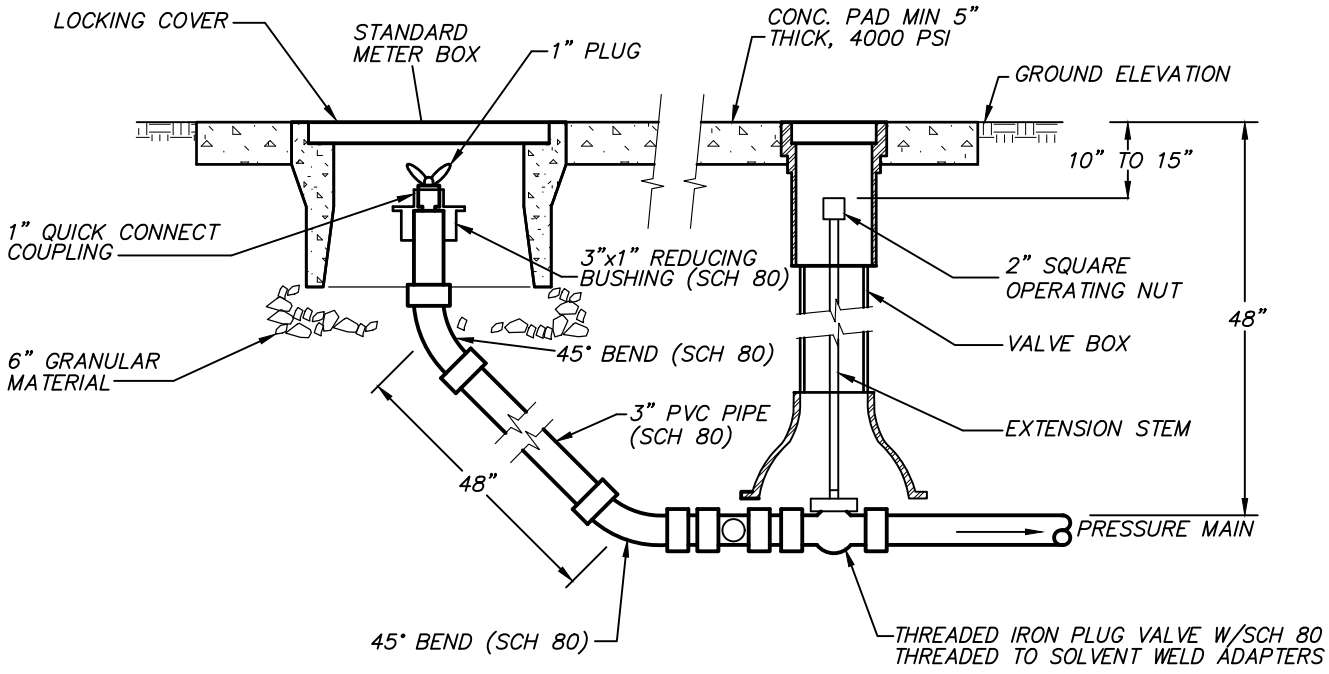

ELEVATION "A-A"

SS-13

CITY OF MEBANE STANDARD	CLEANOUT AT END OF MAIN FOR PRESSURE SEWER SYSTEMS		
	SCALE: N.T.S.	DATE: 7/1/21	DRAWN BY: WDF

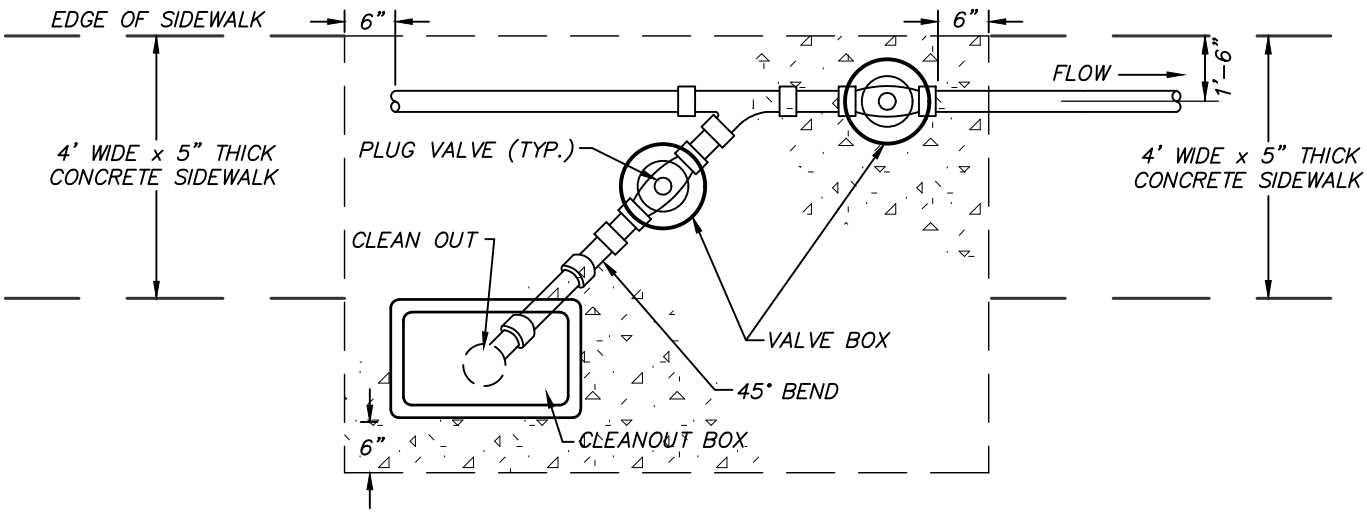

PLAN VIEW

NOTES:

CONCRETE PAD UNDER AND UP ON SIDES OF ALL VALVES TO PREVENT SETTLEMENT AND TWISTING OF VALVE.

CONCRETE PAD SHALL BE MIN. 5" THICK, 4000 PSI

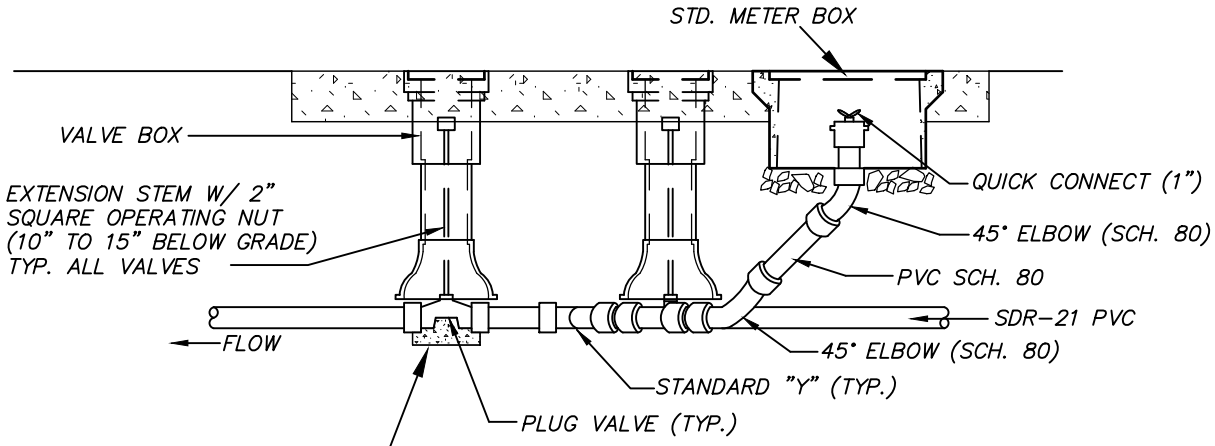

ELEVATION

NOTE: CONTRACTOR SHALL LOCATE BOTTOM OF VALVE BOX SUCH THAT BOX SHALL BEAR ONTO A BRICK SUPPORT & NOT THE PIPE OR VALVE.

SS-14

CITY OF MEBANE STANDARD	MAIN LINE VALVE FOR PRESSURE SEWER SYSTEM		
	SCALE: N.T.S.	DATE: 7/1/21	DRAWN BY: WDF

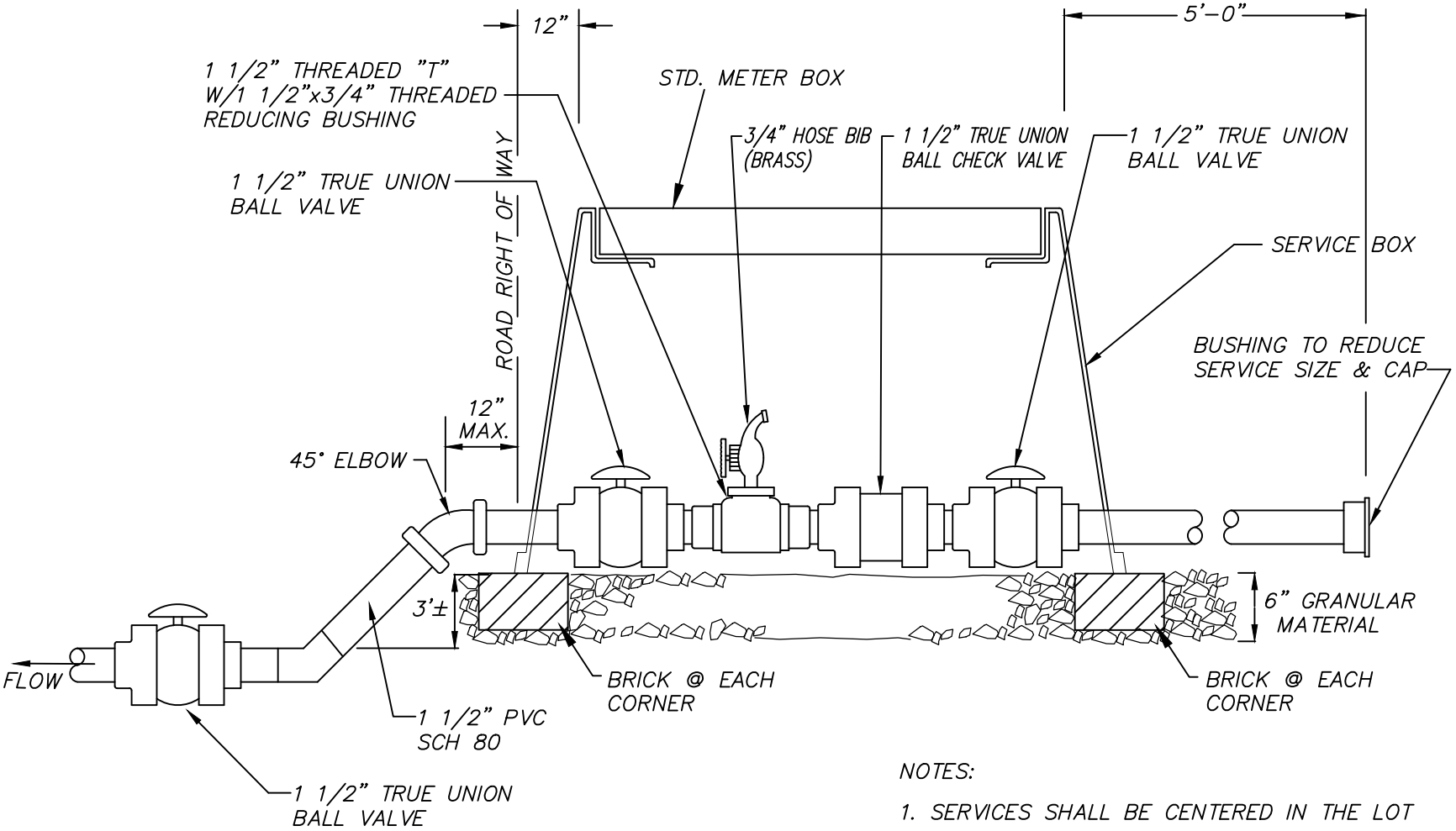

NOTES:

1. SERVICES SHALL BE CENTERED IN THE LOT ROAD FRONTAGE.
2. BOX SHALL NOT BE IN SIDEWALKS OR DRIVEWAYS.
3. TOP OF BOX SHALL BE FLUSH WITH FINISH GRADE OF LOT.

CITY OF MEBANE
STANDARD

STANDARD PRESSURE SEWER
SERVICE CONNECTION

SCALE: N.T.S.
DATE: 7/1/21
DRAWN BY: WDF

SS-15

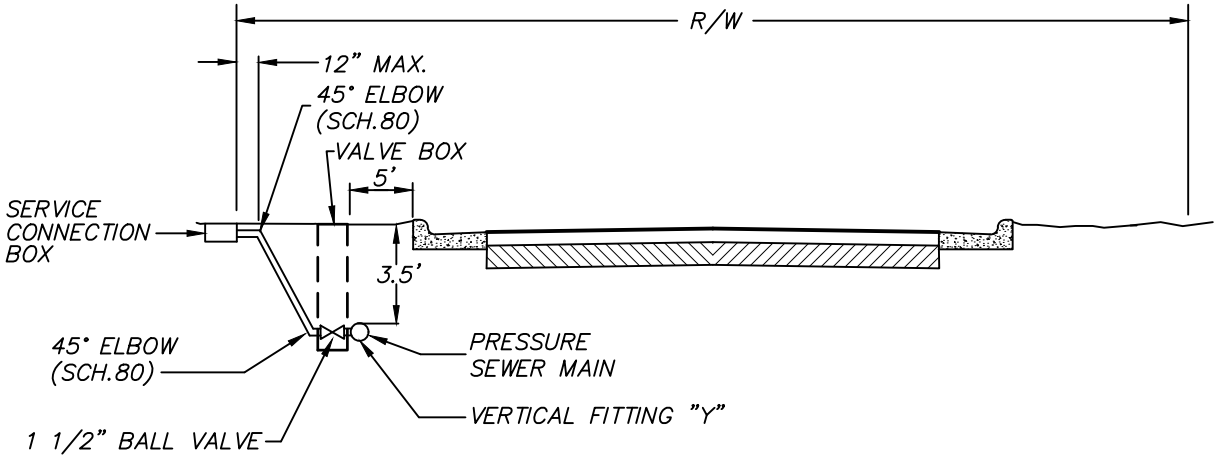

PRESSURE SEWER SHORT SIDE LATERAL SERVICE

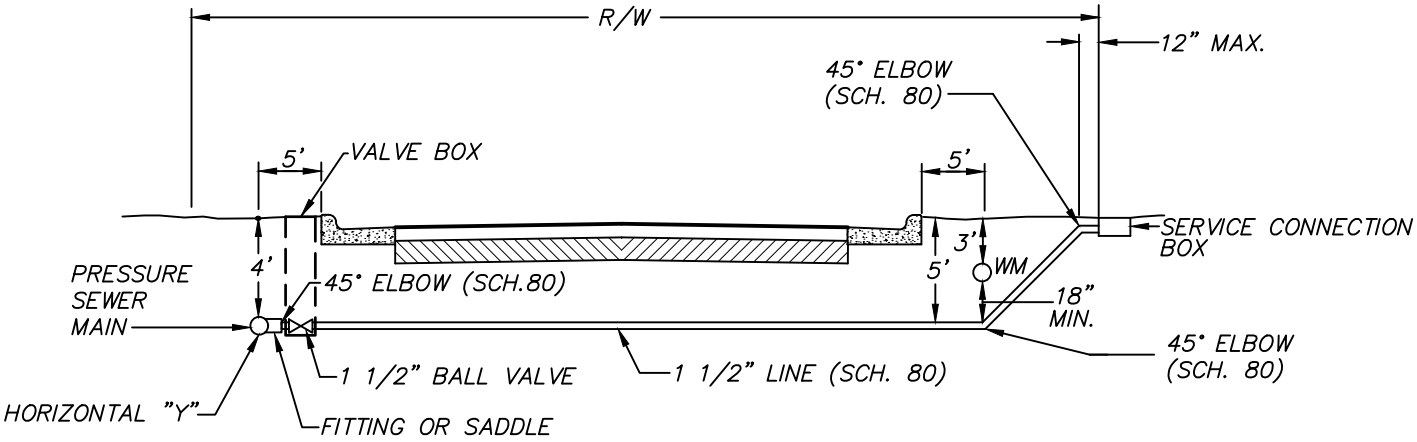

PRESSURE SEWER LONG SIDE LATERAL SERVICE

SS-16

CITY OF MEBANE STANDARD	PRESSURE SEWER LATERAL SERVICES		
	SCALE: N.T.S.	DATE: 7/1/21	DRAWN BY: WDF

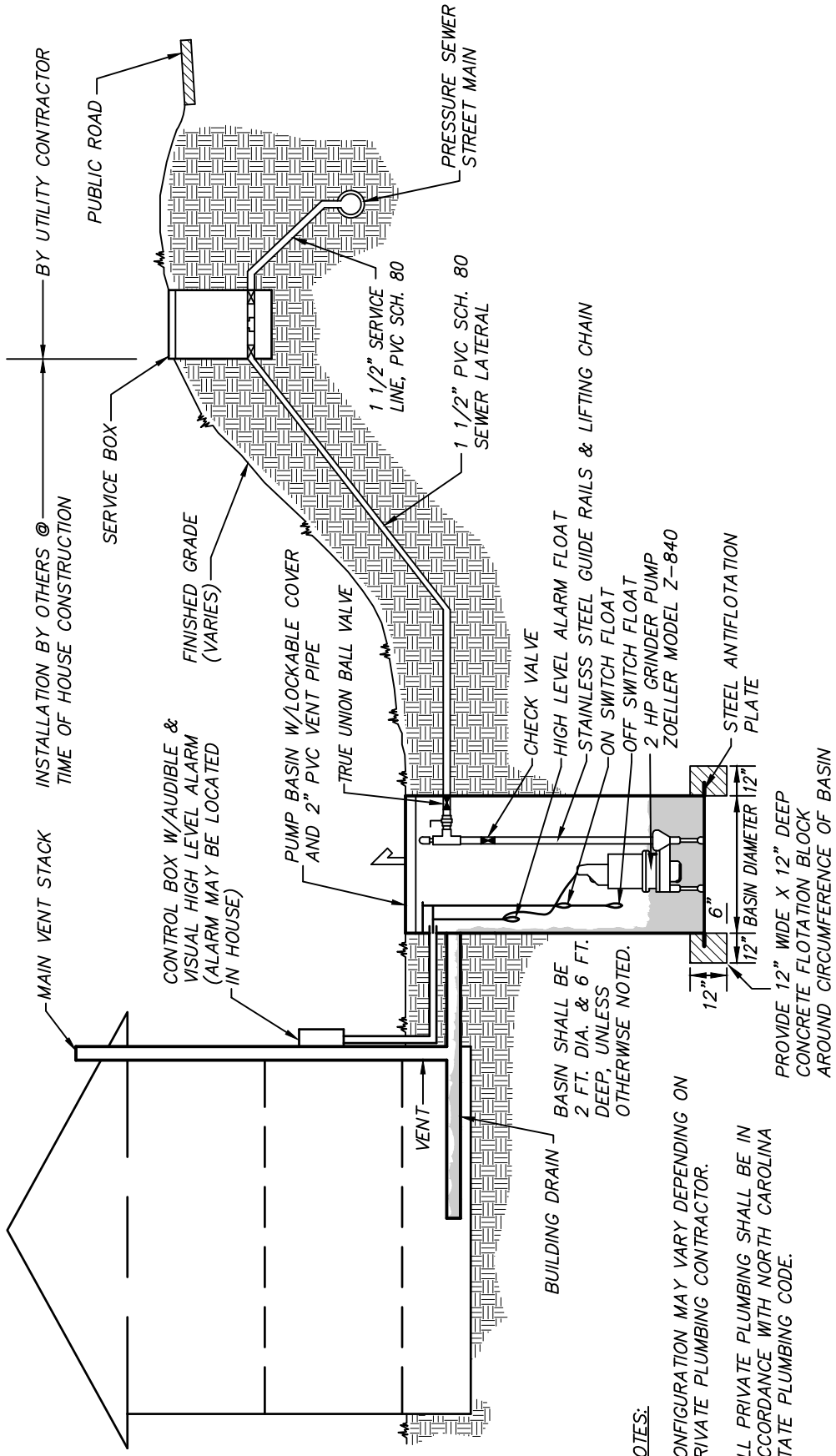

NOTES:

CONFIGURATION MAY VARY DEPENDING ON PRIVATE PLUMBING CONTRACTOR.

ALL PRIVATE PLUMBING SHALL BE IN ACCORDANCE WITH NORTH CAROLINA STATE PLUMBING CODE.

SS-17

CITY OF MEBANE STANDARD

INDIVIDUAL GRINDER PUMP SYSTEM

SCALE: N.T.S.	DATE: 7/1/21	DRAWN BY: WDF

WHERE RESIDENTIAL CLEAN–OUTS OCCUR IN DRIVEWAYS IN NEW CONSTRUCTION, A CASTING SHALL BE INSTALLED TO PROTECT IT. THE CAST IRON CASTING IS TO BE A MIN. OF 2" GREATER I.D. THAN THE SIZE OF PIPE IT IS INSTALLED OVER, IT SHALL BE SET IN CONCRETE AT FINISHED GRADE. CASTING SHALL CONFORM TO THE REQUIREMENTS OF AASHTO H20–44. SEE THE FOLLOWING SKETCH FOR FURTHER DETAILS.

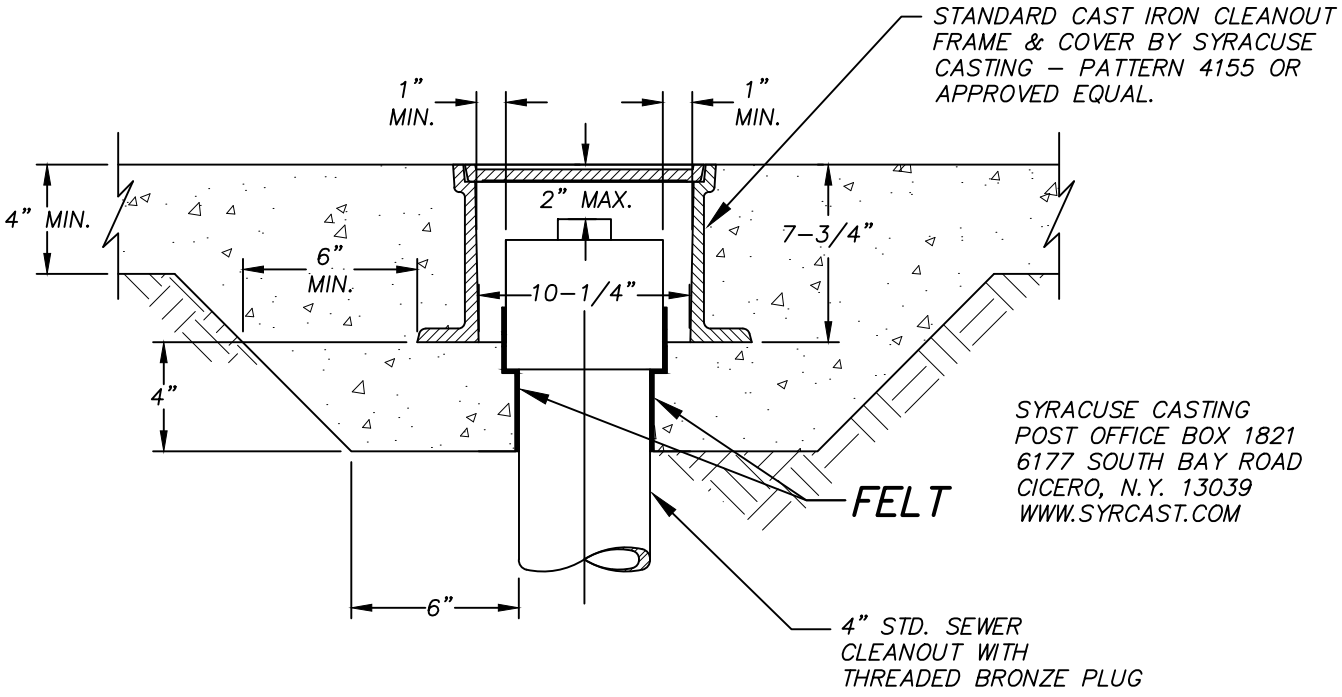

ELEVATION VIEW

SS-18

CITY OF MEBANE STANDARD	SEWER CLEANOUT IN TRAFFIC AREA		
	SCALE: N.T.S.	DATE: 7/1/21	DRAWN BY: WDF

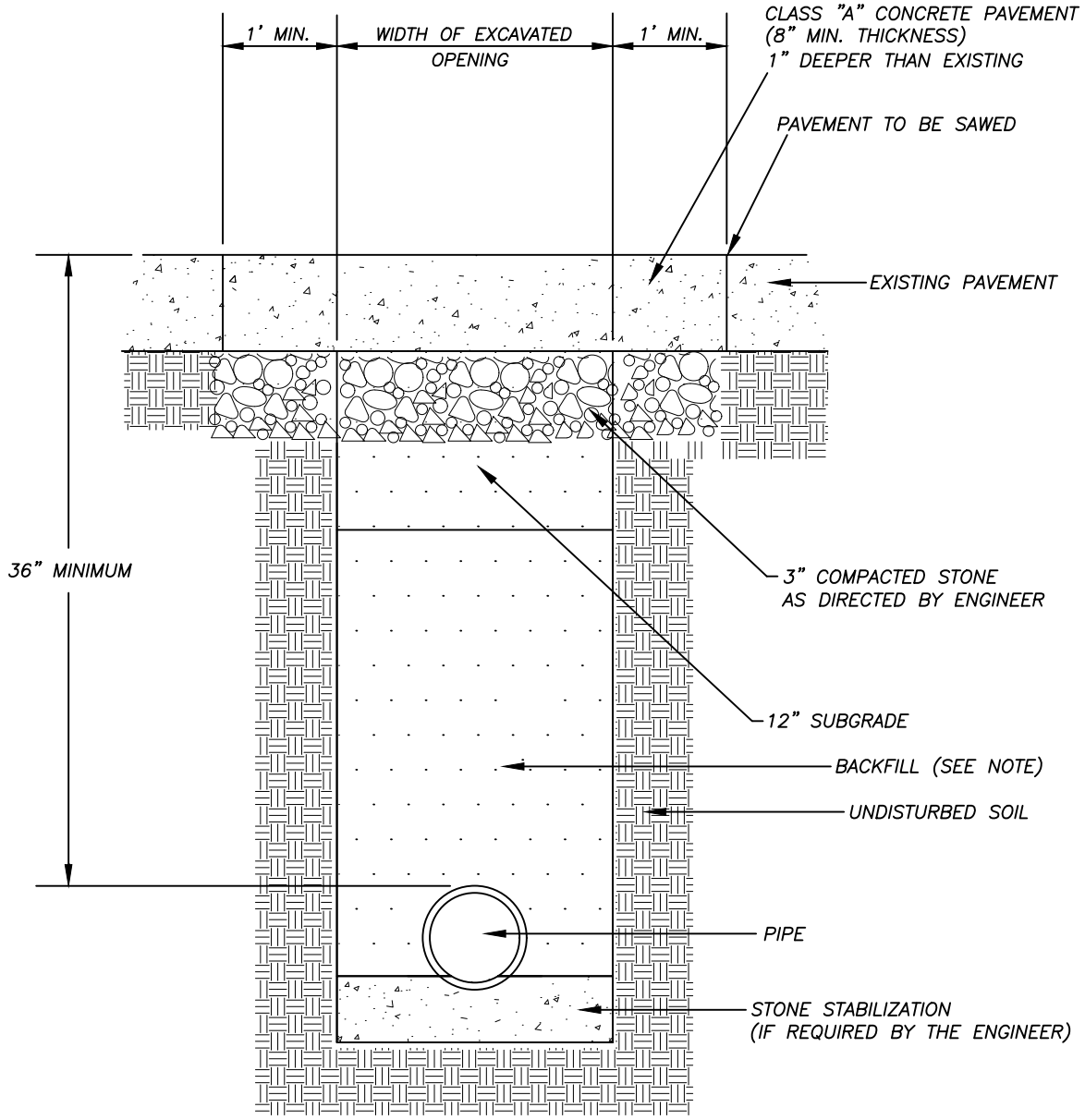

NOTE:
WHERE THE EDGE OF THE PATCH OR SECTION OF REMOVED PAVEMENT IS LESS THAN 10' FROM A TRANSVERSE EXPANSION OR CONTRACTION JOINT OR CRACK, THE ENTIRE SECTION OF PAVEMENT SHALL BE REMOVED UP TO THE JOINT OR CRACK AND REPLACED WITH NEW CONCRETE AND ABC STONE IN ACCORDANCE WITH THE MOST CURRENT N.C.D.O.T. STANDARD SPECIFICATIONS.

THE BACKFILL SHALL BE MADE IN 6" LAYERS AND SHALL BE COMPACTED TO AT LEAST 95% OF STANDARD DENSITY (AASHTO METHOD T-99). EACH LAYER MUST BE THOROUGHLY TAMPED BY A MECHANICAL TAMP BEFORE THE NEXT LAYER IS PLACED.

SS-19

CITY OF MEBANE STANDARD	CONCRETE DRIVEWAY REPAIR DETAIL		
	SCALE: N.T.S.	DATE: 7/1/21	DRAWN BY: WDF

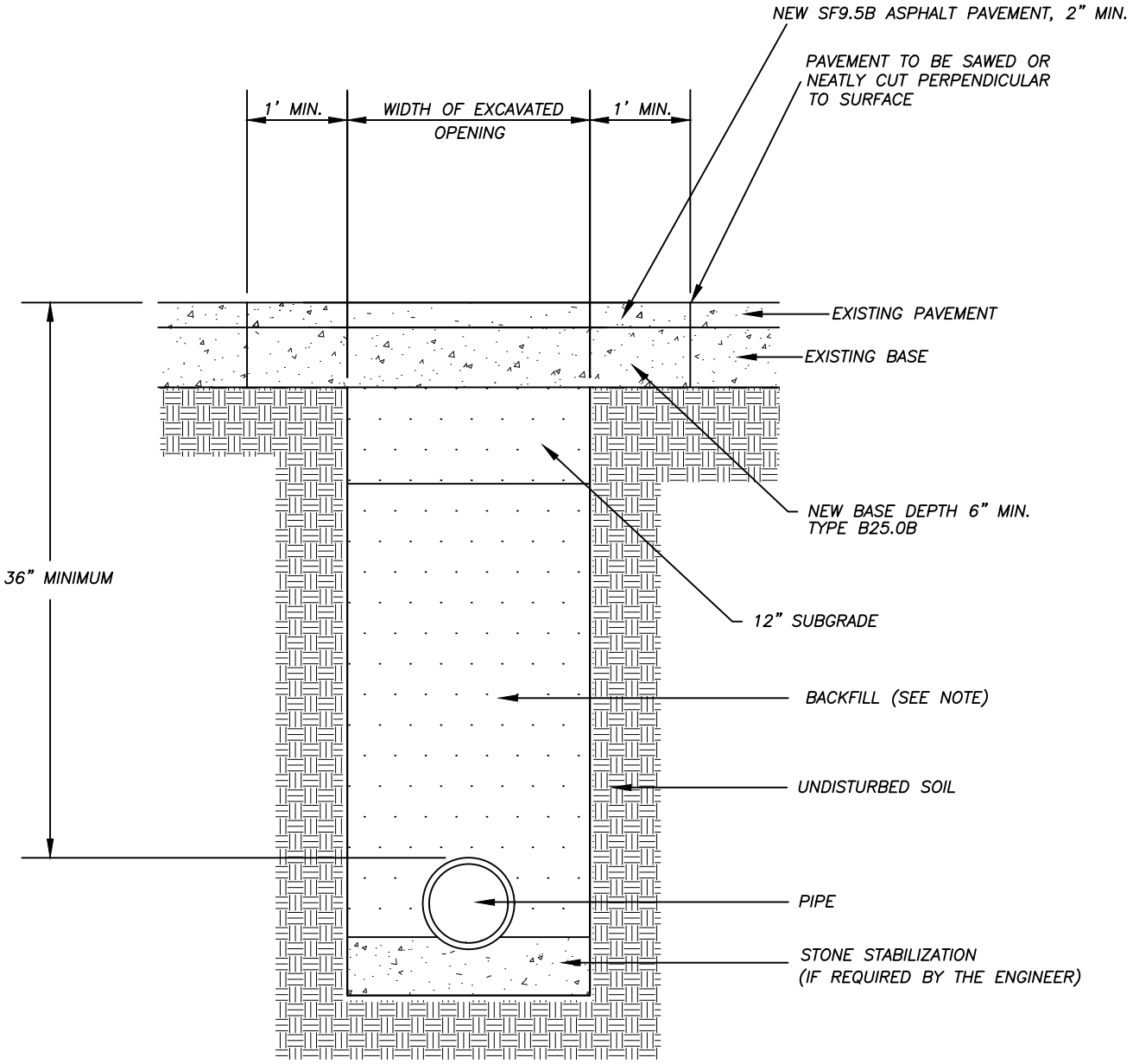

NOTE:

THE BACKFILL SHALL BE MADE IN 6" LAYERS AND SHALL BE COMPACTED TO AT LEAST 95% OF STANDARD DENSITY (AASHTO METHOD T-99). EACH LAYER MUST BE THOROUGHLY TAMPED BY A MECHANICAL TAMP BEFORE THE NEXT LAYER IS PLACED. ALL ASPHALT PAVEMENT REPLACED SHALL BE IN ACCORDANCE WITH THE MOST CURRENT N.C.D.O.T. STANDARD SPECIFICATIONS. BASE COURSE DENSITY AND SUBGRADE DENSITY SHALL BE 100%.

SS-20

CITY OF MEBANE STANDARD	ASPHALT PAVEMENT REPAIR DETAIL		
	SCALE: N.T.S.	DATE: 7/1/21	DRAWN BY: WDF

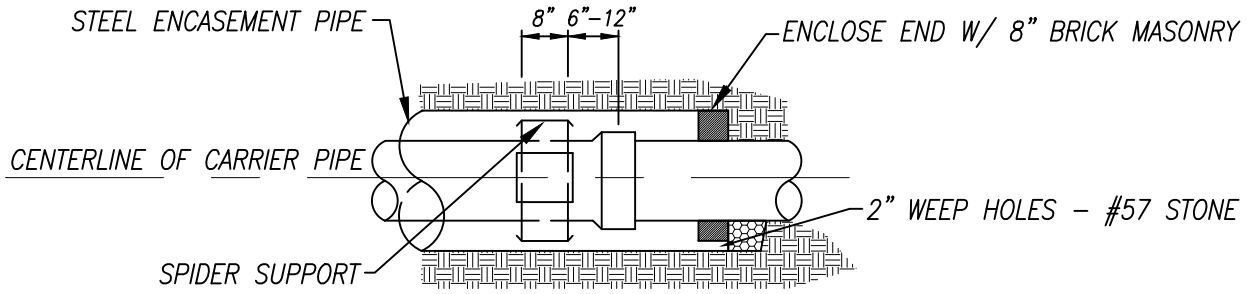

CASING END SECTION

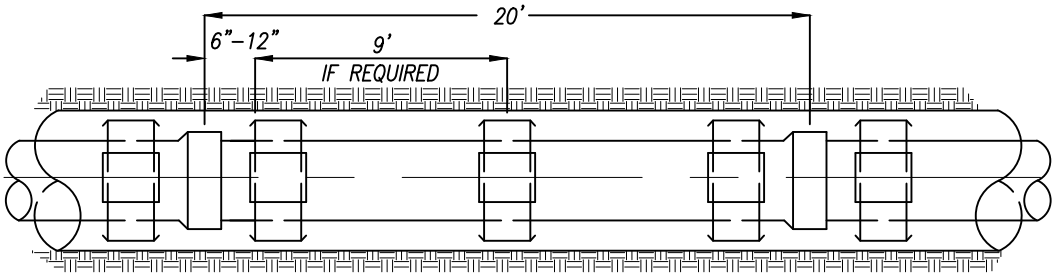

SIDE VIEW

TYPICAL SPACING FOR STEEL SPIDERS

STEEL ENCASEMENT DETAIL

NOTES:

1. NORMAL SPACING FOR SPIDERS IS 3 PER 18' LENGTH OF PIPE, ONE SUPPORT AT EACH END AND A SUPPORT AT 9' CENTER.
2. SPACERS SHALL BE STAINLESS STEEL WITH STAINLESS STEEL HARDWARE AND POLYMER SKIDS.
3. PROVIDE RUBBER WRAP BETWEEN CARRIER PIPE AND SPACER.
4. FIELD MODIFY AS REQUIRED TO PROVIDE DESIGN SLOPE IN CARRIER PIPE.
5. ALL ENCASEMENT PIPES SHALL BE FIELD SURVEYED, AND LOCATION & ELEVATIONS PROVIDED ON AS-BUILTS.

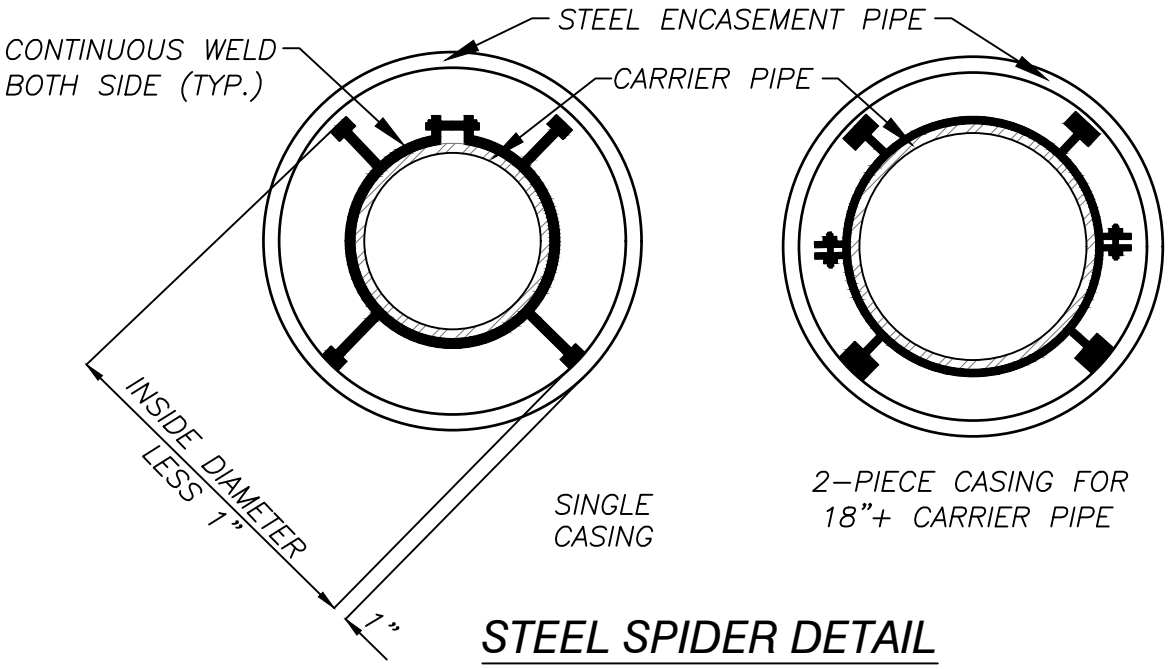

STEEL SPIDER DETAIL

SS-21

CITY OF MEBANE STANDARD	ENCASEMENT PIPE SUPPORT AND SPACERS		
	SCALE: N.T.S.	DATE: 7/1/21	DRAWN BY: WDF

CITY OF MEBANE STANDARD

STANDARD 4" S.S. SERVICE FOR DEEP SEWER MAINS (14' & GREATER)

SCALE: N.T.S. | DATE: 7/1/21 | DRAWN BY: WDF

SS-22

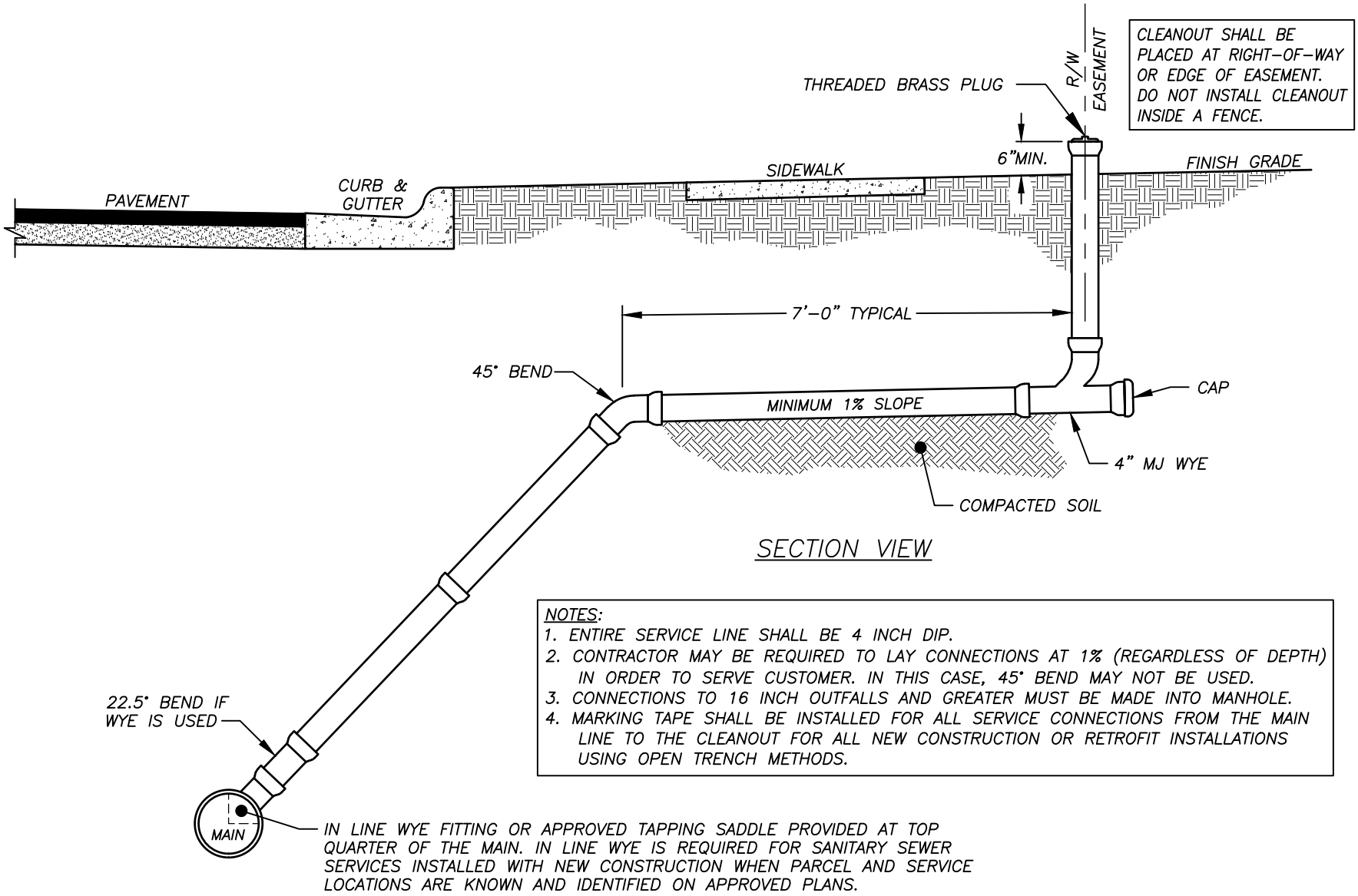

NOTES:
1. ENTIRE SERVICE LINE SHALL BE 4 INCH DIP.
2. CONTRACTOR MAY BE REQUIRED TO LAY CONNECTIONS AT 1% (REGARDLESS OF DEPTH) IN ORDER TO SERVE CUSTOMER. IN THIS CASE, 45° BEND MAY NOT BE USED.
3. CONNECTIONS TO 16 INCH OUTFALLS AND GREATER MUST BE MADE INTO MANHOLE.
4. MARKING TAPE SHALL BE INSTALLED FOR ALL SERVICE CONNECTIONS FROM THE MAIN LINE TO THE CLEANOUT FOR ALL NEW CONSTRUCTION OR RETROFIT INSTALLATIONS USING OPEN TRENCH METHODS.

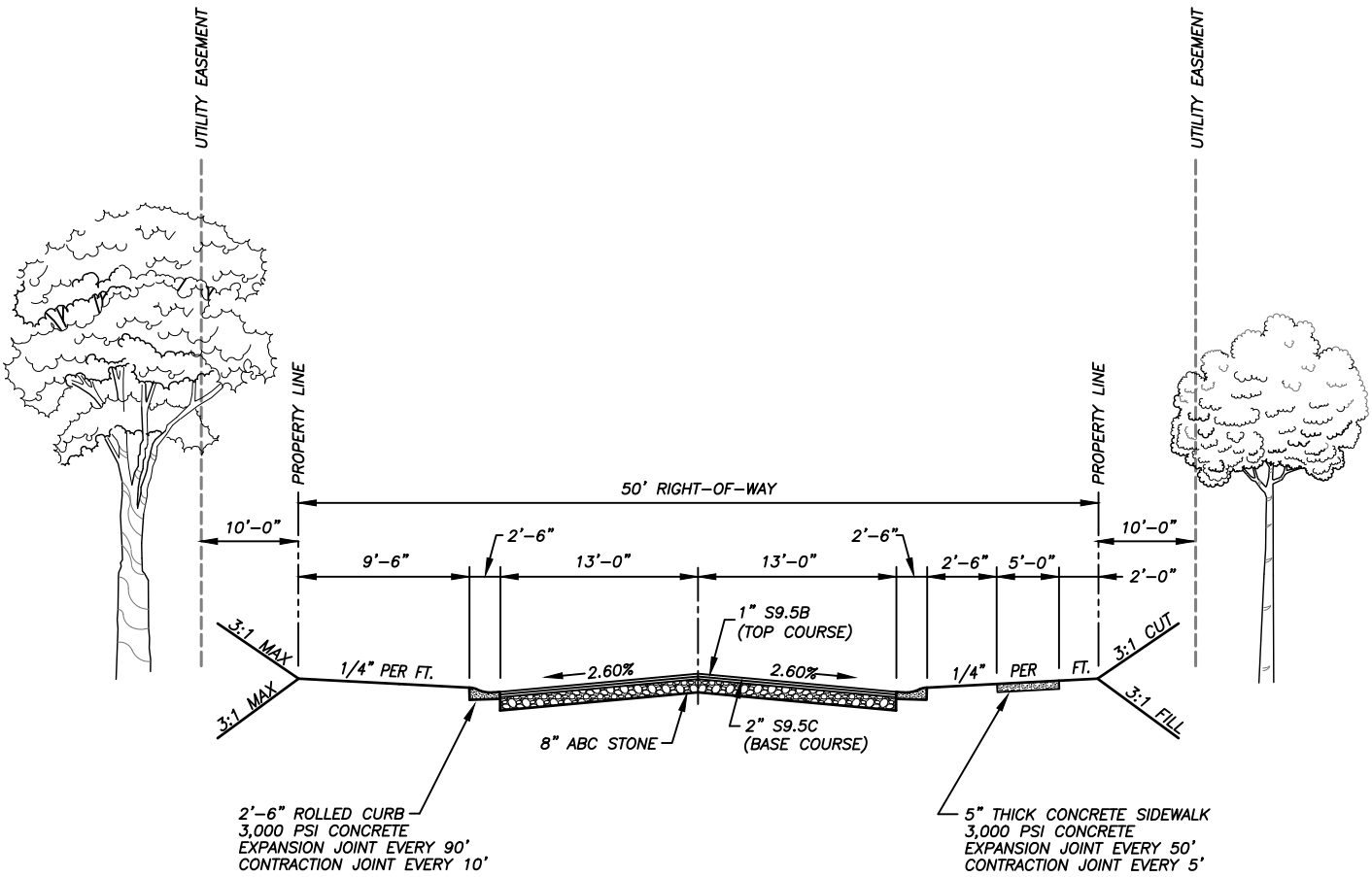

NOTES:

1. ALL ASPHALT CEMENT PLANT MIX AND METHOD OF PLACEMENT SHALL COMPLY WITH N.C. DOT STANDARD SPECIFICATIONS.
2. ALL WORK SHALL COMPLY WITH N.C. DOT STANDARD SPECIFICATIONS.
3. TOP COURSE TO BE PLACED WITHIN 12 MONTHS OF ASPHALT BASE COURSE. THE TOP COAT WILL BE PLACED NO EARLIER THAN 6 MONTHS AFTER BASE COURSE IS PLACED.
4. COMMERCIAL AND INDUSTRIAL STREET SECTIONS TO BE DETERMINED ON A CASE BY CASE BASIS.
5. WHERE NEW SIDEWALK CROSSES EXISTING GRAVEL DRIVEWAY, SIDEWALK NEEDS TO BE 6" THICK.
6. PROVIDE APPROVED NCDOT SEALANT OVER ALL EXPANSION JOINTS ALONG CONCRETE CURBS AND CONCRETE SIDEWALKS.
7. CUT FILL SLOPE EXCEEDING MAXIMUM MUST BE APPROVED BY THE CITY ENGINEER.
8. SIDEWALK MUST BE LOCATED ON ONE SIDE OF THE STREET EXCEPT WHEN CITY PROJECT APPROVAL REQUIRES ON BOTH SIDES.
9. STREET TREES ARE TO BE LOCATED BEHIND THE UTILITY EASEMENT.

ST-1

CITY OF MEBANE STANDARD	RESIDENTIAL STREET SECTION (50' ROW - 31' B-B)		
	SCALE: N.T.S.	DATE: 7/1/21	DRAWN BY: WDF

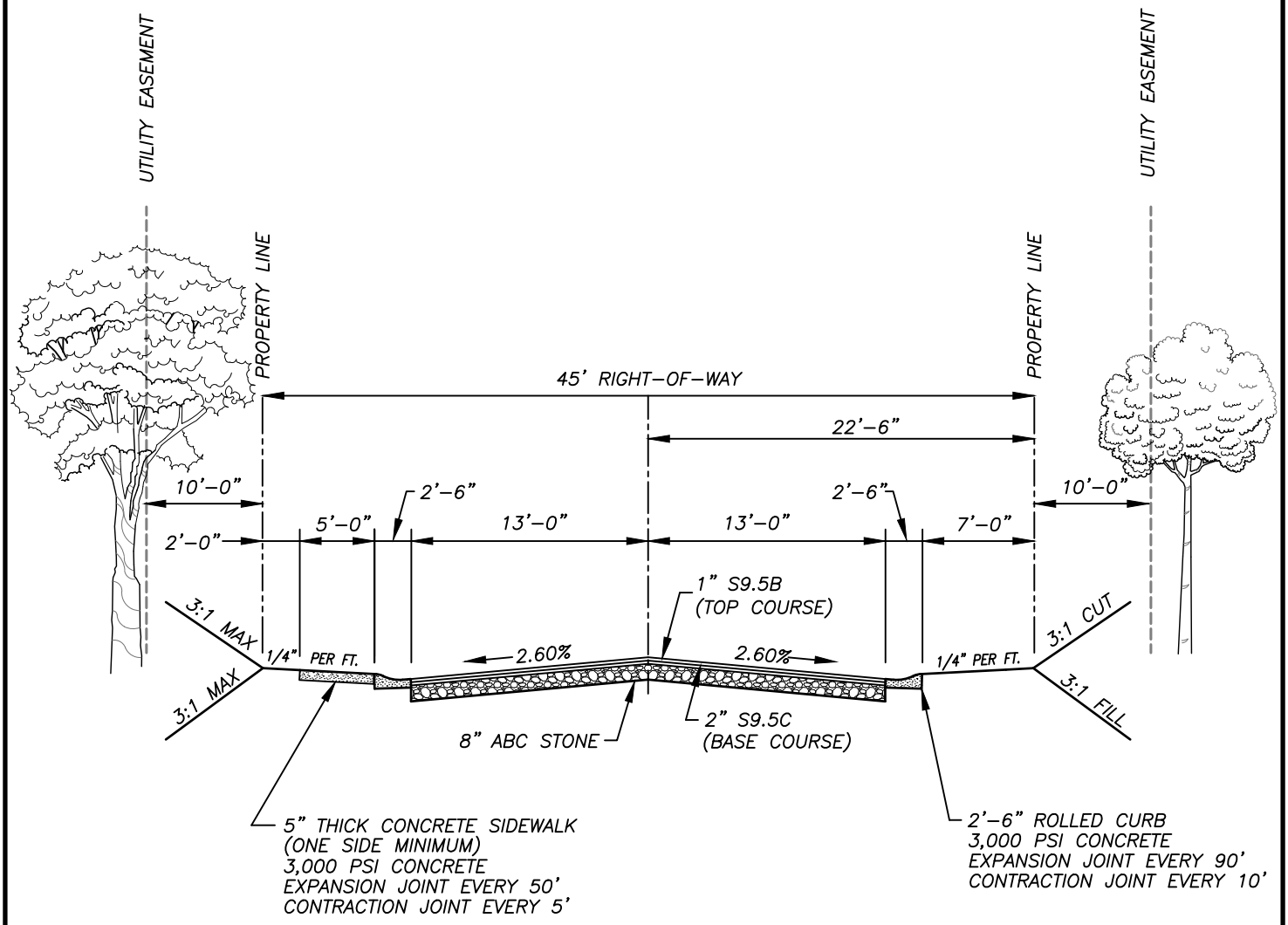

NOTES:

1. ALL ASPHALT CEMENT PLANT MIX AND METHOD OF PLACEMENT SHALL COMPLY WITH N.C. DOT STANDARD SPECIFICATIONS.
2. ALL WORK SHALL COMPLY WITH N.C. DOT STANDARD SPECIFICATIONS.
3. TOP COURSE TO BE PLACED WITHIN 12 MONTHS OF ASPHALT BASE COURSE. THE TOP COAT WILL BE PLACED NO EARLIER THAN 6 MONTHS AFTER BASE COURSE IS PLACED.
4. COMMERCIAL AND INDUSTRIAL STREET SECTIONS TO BE DETERMINED ON A CASE BY CASE BASIS.
5. WHERE NEW SIDEWALK CROSSES EXISTING GRAVEL DRIVEWAY, SIDEWALK NEEDS TO BE 6" THICK.
6. PROVIDE APPROVED NCDOT SEALANT OVER ALL EXPANSION JOINTS ALONG CONCRETE CURBS AND CONCRETE SIDEWALKS.
7. CUT FILL SLOPE EXCEEDING MAXIMUM MUST BE APPROVED BY THE CITY ENGINEER.
8. SIDEWALK MUST BE LOCATED ON ONE SIDE OF THE STREET EXCEPT WHEN CITY PROJECT APPROVAL REQUIRES ON BOTH SIDES.
9. STREET TREES ARE TO BE LOCATED BEHIND THE UTILITY EASEMENT.

ST-2

CITY OF MEBANE STANDARD	RESIDENTIAL STREET SECTION FOR TOWNHOME DEVELOPMENTS (45' ROW - 31' B-B)		
	SCALE: N.T.S.	DATE: 7/1/21	DRAWN BY: WDF

CITY OF MEBANE STANDARD

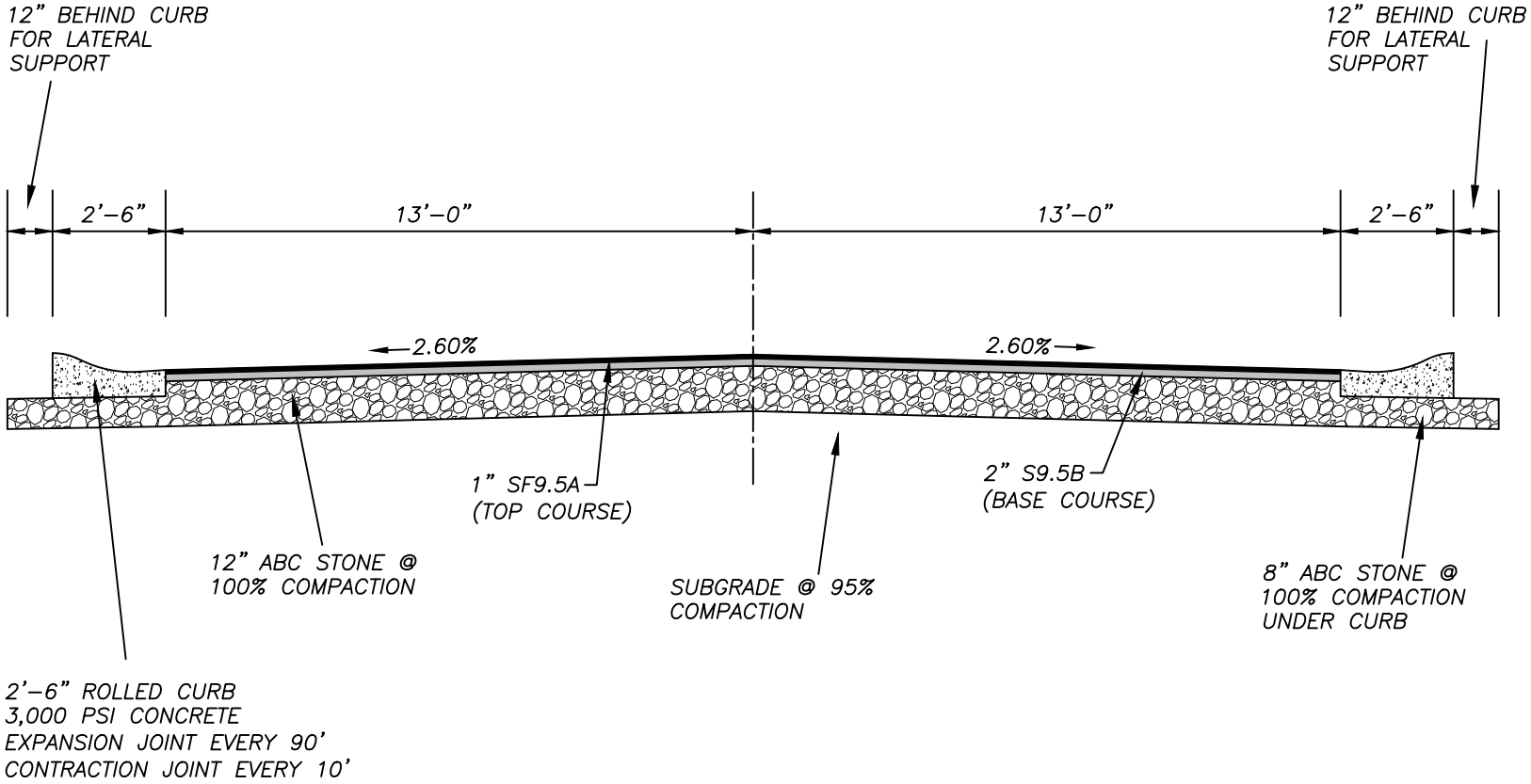

NOVEMBER - APRIL

WINTER STREET SECTION

SCALE: N.T.S.

DATE: 7/1/21

DRAWN BY: WDF

ST-3

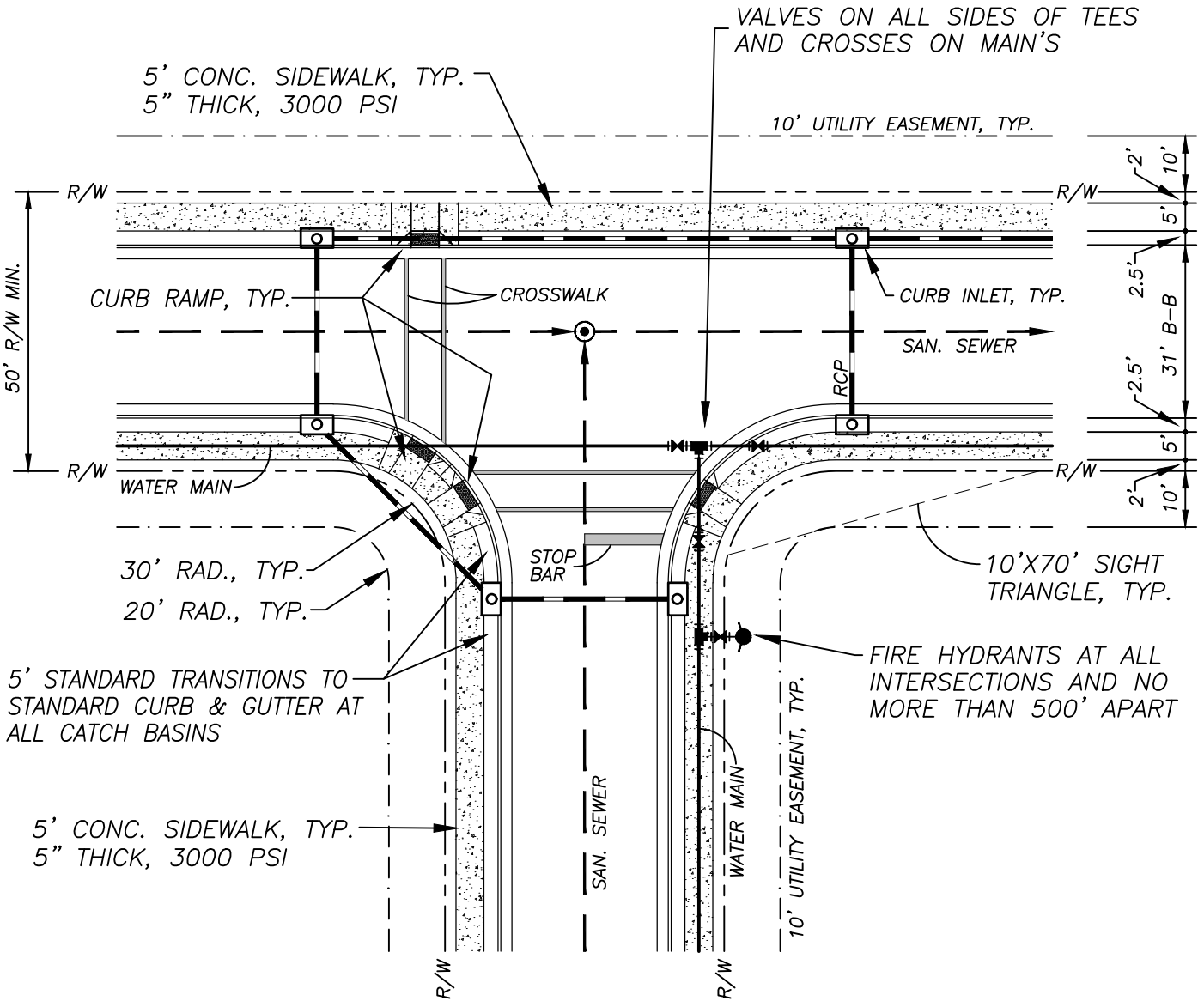

ST-4

CITY OF MEBANE STANDARD

GENERAL SUBDIVISION REQUIREMENTS FOR ROADWAYS AND UTILITIES

SCALE: N.T.S.	DATE: 7/1/21	DRAWN BY: WDF

NOTES :

1. UTILITY LOCATIONS

- WATER LINE UNDER THE SIDEWALK
- SEWER LINE MIDDLE OF STREET
- NATURAL GAS IN 10' UTILITY EASEMENT ADJACENT TO STREET R/W
- ELECTRIC UNDERGROUND IN 10' UTILITY EASEMENT ADJACENT TO STREET R/W
- TELEPHONE IN 10' UTILITY EASEMENT ADJACENT TO STREET R/W
- CABLE IN 10' UTILITY EASEMENT ADJACENT TO STREET R/W

2. WATER AND SEWER IMPROVEMENTS

- ALL WATER LINES ARE TO BE A MIN. OF 8" IN SIZE EXCEPT FOR CUL-DE-SACS WHERE 6" IS ALLOWED WHEN LESS THAN 600 FT. AND 4" IS ALLOWED WHEN LESS THAN 400 FT.
- WATER MAIN IS TO BE DUCTILE IRON PIPE CLASS 50
- SEWER MAINS ARE TO BE A MIN. OF 8" IN SIZE
- SEWER MAINS ARE TO BE VITRIFIED CLAY PIPE OR DUCTILE IRON PIPE, CLASS 50.
- FOR RESIDENTIAL AREAS, PVC SDR-35 CAN BE USED AS APPROVED BY THE PUBLIC WORKS DIRECTOR

3. STORM DRAINAGE

- ALL STORM DRAINS ARE TO BE A MIN. OF 15 INCH IN SIZE
- MATERIALS ARE TO BE REINFORCED CONCRETE PIPE OR HDPE EXCEPT WHEN LARGER THAN 72 INCH. ALTERNATIVE PIPE MATERIAL MAY BE USED AS APPROVED BY THE PUBLIC WORKS DIRECTOR
- CURB INLETS TO BE LOCATED WHERE NO MORE THAN 1.0 ACRE OF DRAINAGE CONTRIBUTES TO ANY INLET EXCEPT IN SAGS WHERE 6' WIDE BASINS CAN BE USED WHICH WILL BE ALLOWED TO DRAIN 1.5 ACRE SUB-BASINS.

4. CONCRETE SIDEWALKS

- 3,000 P.S.I.
- 5' WIDE AND 5" THICK
- SEE CURRENT CITY REQUIREMENTS

5. OTHER

- ANY CHANGES TO THE GENERAL REQUIREMENTS SHALL BE PRE-APPROVED BY THE PUBLIC WORKS DIRECTOR
- CITY OF MEBANE STANDARD SPECIFICATIONS AND DETAILS ARE TO BE USED
- NO BURNING ALLOWED INSIDE THE CITY OF MEBANE
- CONDUIT AND STREET LIGHTING LAYOUT TO BE APPROVED PRIOR TO CURB INSTALLATION. FAILURE TO RECEIVE APPROVAL PRIOR TO CURB INSTALLATION WILL RESULT IN THE REQUIREMENT OF AN ENCROACHMENT AGREEMENT PRIOR TO INSTALLATION.
- THE CITY HAS THE RIGHT TO REQUEST RELOCATION OF ANY UTILITY LINES OR CABLES NOT INSTALLED IN ACCORDANCE WITH THESE REQUIREMENTS, UNLESS PRIOR APPROVAL IS MADE FOR A VARIANCE.

CITY OF MEBANE STANDARD

GENERAL SUBDIVISION REQUIREMENTS FOR ROADWAYS AND UTILITIES

SCALE: N.T.S.	DATE: 7/1/21	DRAWN BY: WDF

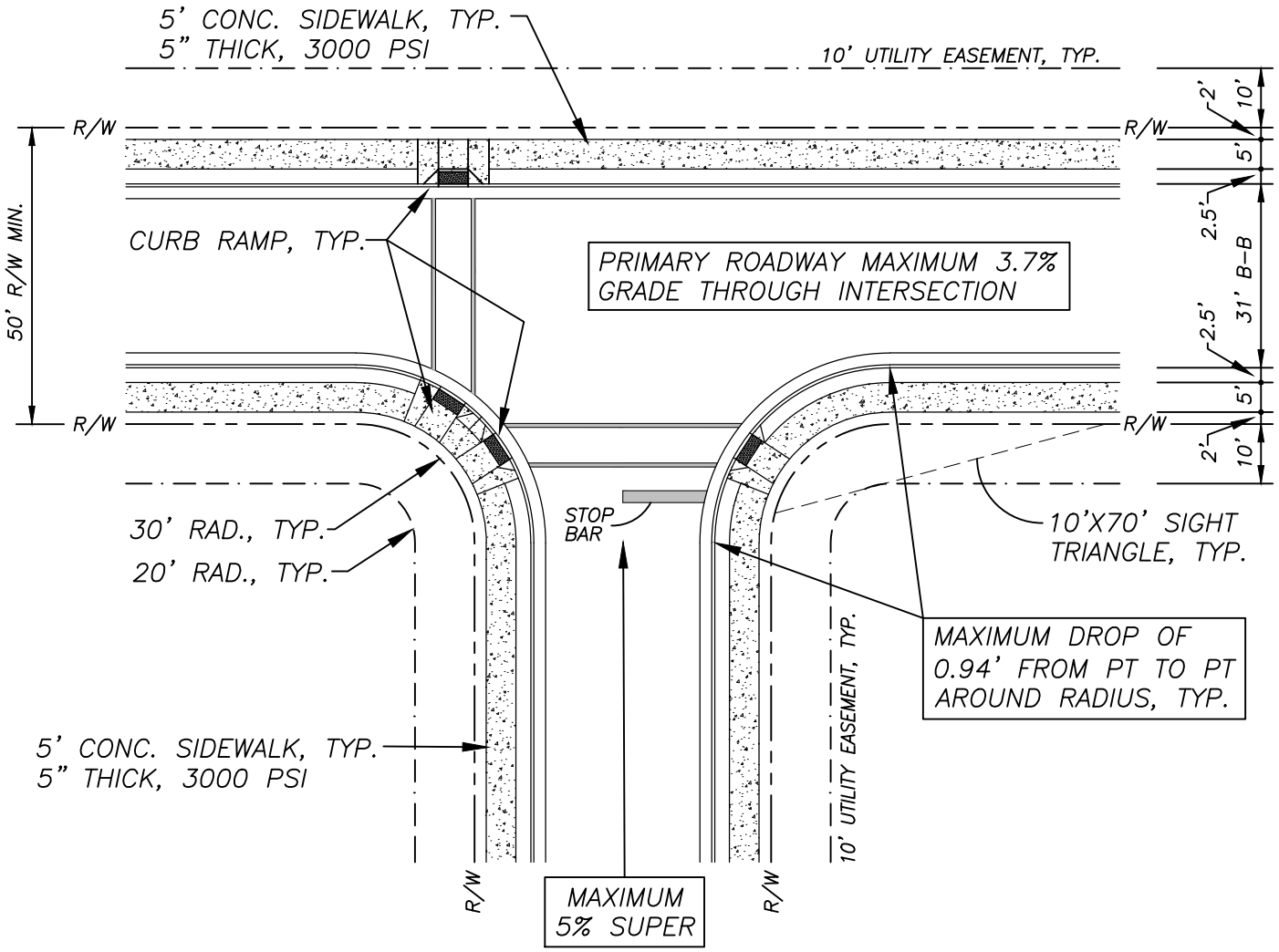

ADA INTERSECTION GUIDELINES AND STANDARDS

R302.6 CROSS SLOPE – EXCEPT AS PROVIDED IN R302.6.1 AND R302.6.2, THE CROSS SLOPE OF PEDESTRIAN ACCESS ROUTES SHALL BE 2 PERCENT MAXIMUM.

R302.6.1 PEDESTRIAN STREET CROSSINGS WITHOUT YIELD OR STOP CONTROL – WHERE PEDESTRIAN ACCESS ROUTES ARE CONTAINED WITHIN PEDESTRIAN STREET CROSSINGS WITHOUT YIELD OR STOP CONTROL, THE CROSS SLOPE OF THE PEDESTRIAN ACCESS ROUTE SHALL BE 5 PERCENT MAXIMUM.

ADVISORY R302.6.1 PEDESTRIAN STREET CROSSINGS WITHOUT YIELD OR STOP CONTROL – PEDESTRIAN STREET CROSSINGS WITHOUT YIELD OR STOP CONTROL ARE CROSSINGS WHERE THERE IS NO YIELD OR STOP SIGN, OR WHERE THERE IS A TRAFFIC SIGNAL THAT IS DESIGNED FOR THE GREEN PHASE. AT PEDESTRIAN STREET CROSSINGS WITHOUT YIELD OR STOP CONTROL, VEHICLES CAN PROCEED THROUGH THE INTERSECTION WITHOUT SLOWING OR STOPPING. WHERE PEDESTRIAN ACCESS ROUTES ARE CONTAINED WITHIN PEDESTRIAN STREET CROSSINGS WITH YIELD OR STOP CONTROL, THE CROSS SLOPE OF THE PEDESTRIAN ACCESS ROUTE MUST BE 2 PERCENT MAXIMUM (SEE R302.6). AT PEDESTRIAN STREET CROSSINGS WITH YIELD OR STOP CONTROL, VEHICLES SLOW OR STOP BEFORE PROCEEDING THROUGH THE INTERSECTION.

R302.6.2 MIDBLOCK PEDESTRIAN STREET CROSSINGS – WHERE PEDESTRIAN ACCESS ROUTES ARE CONTAINED WITHIN MIDBLOCK PEDESTRIAN STREET CROSSINGS, THE CROSS SLOPE OF THE PEDESTRIAN ACCESS ROUTE SHALL BE PERMITTED TO EQUAL THE STREET OR HIGHWAY GRADE.

ST-6

CITY OF MEBANE STANDARD	ADA INTERSECTION		
	SCALE: N.T.S.	DATE: 7/1/21	DRAWN BY: WDF

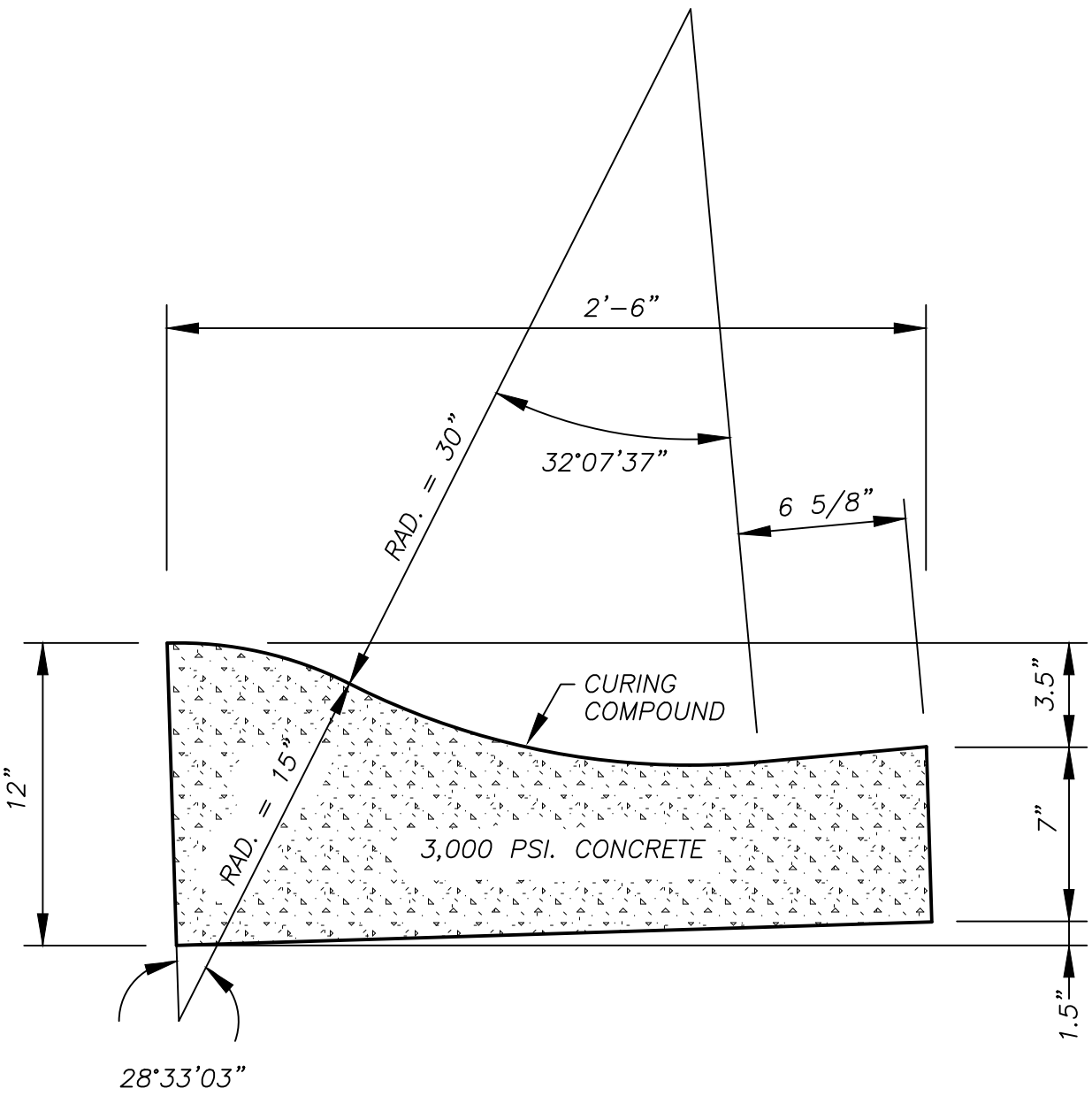

NOTES:

1. 3,000 PSI CONCRETE CURB.
2. EXPANSION JOINT EVERY 90' AND CONTRACTION JOINT EVERY 10'.
3. PROVIDE SEALANT OVER EXPANSION JOINTS AS PER NCDOT STANDARD SPECIFICATIONS.

ST-7

CITY OF MEBANE STANDARD	30" ROLLED CURB		
	SCALE: N.T.S.	DATE: 7/1/21	DRAWN BY: WDF

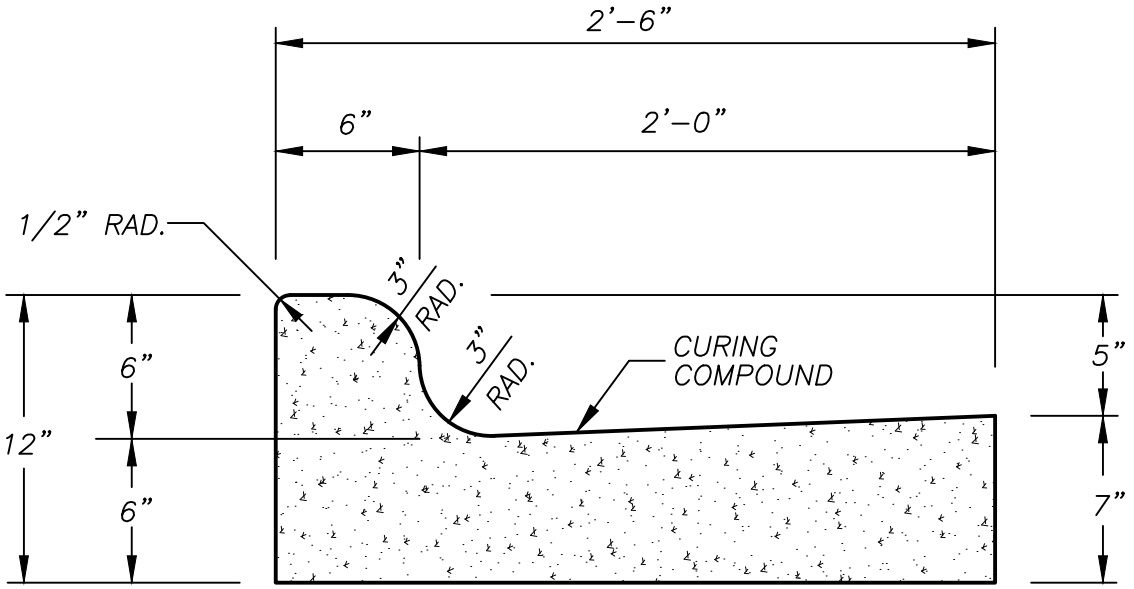

NOTES:

1. 3,000 PSI CONCRETE CURB.
2. EXPANSION JOINT EVERY 90' AND CONTRACTION JOINT EVERY 10'.
3. PROVIDE SEALANT OVER EXPANSION JOINTS AS PER NCDOT STANDARD SPECIFICATIONS.

ST-8

CITY OF MEBANE STANDARD	30" STANDARD CURB		
	SCALE: N.T.S.	DATE: 7/1/21	DRAWN BY: WDF

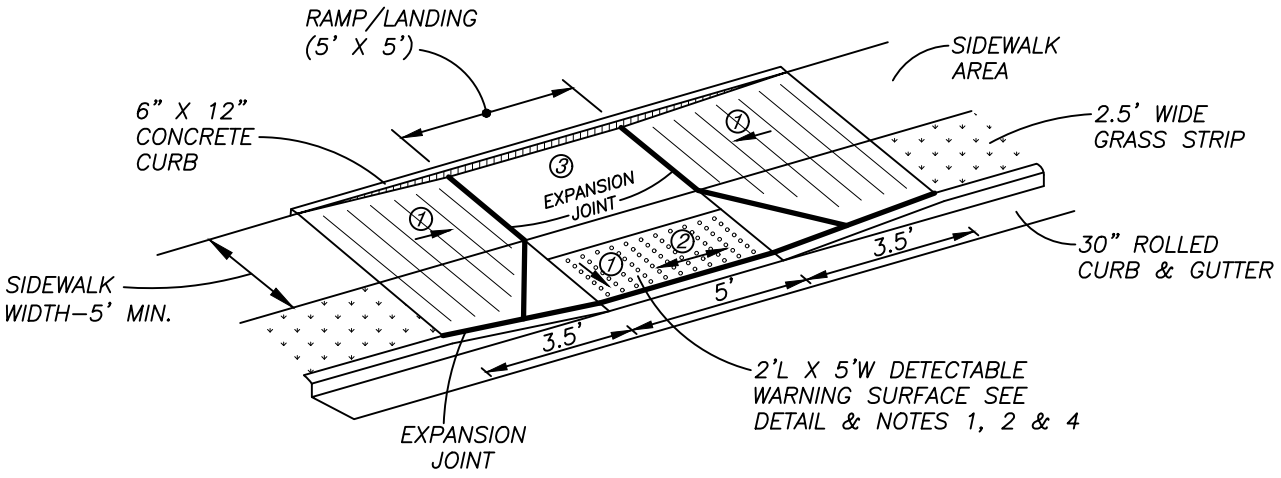

IF DESIGN CALLS FOR A SINGLE CROSSING, OMIT RAMP IN DIRECTION NOT NEEDED, SUBJECT TO APPROVAL BY CITY ENGINEER.

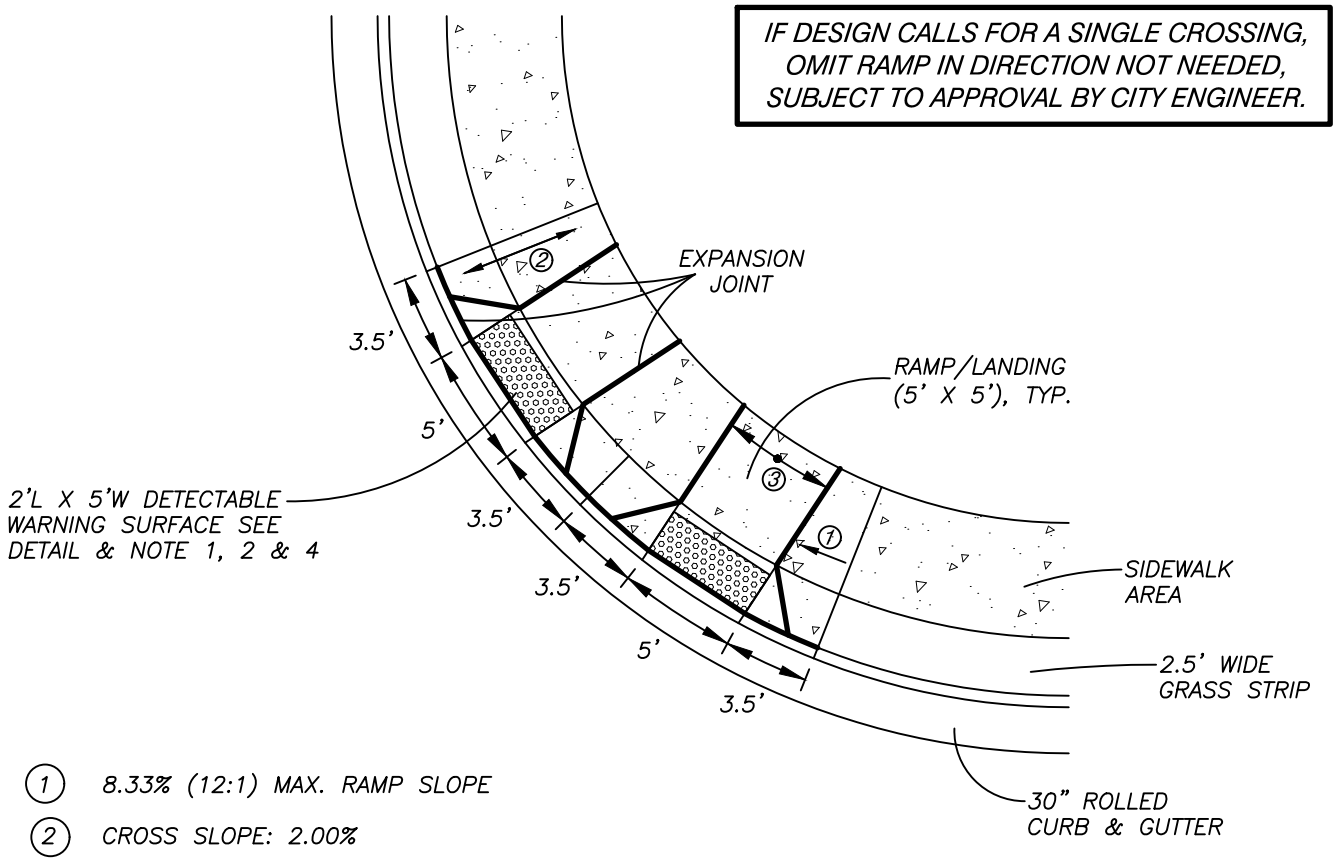

1. 8.33% (12:1) MAX. RAMP SLOPE
2. CROSS SLOPE: 2.00%
3. CURB RAMPS REQUIRE A (5'–0") MINIMUM LANDING WITH A MAXIMUM GROSS SLOPE AND LONGITUDINAL SLOPE OF 2.00% WHERE PEDESTRIANS PERFORM TURNING MANEUVERS. SLOPE TO DRAIN TO CURB.
4. CAST IN PLACE TRUNCATED DOMES MUST BE USED ON ALL NEW CURB RAMPS.

ST-9

CITY OF MEBANE STANDARD	CURB RAMP		
	SCALE: N.T.S.	DATE: 7/1/21	DRAWN BY: WDF

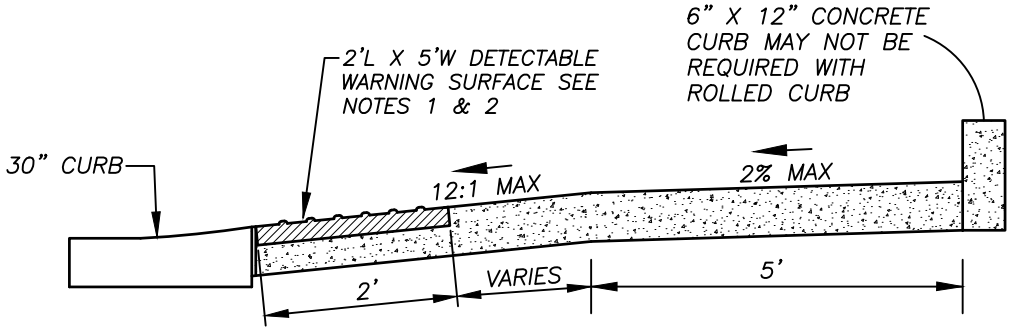

SECTION

NOTES:

1. DETECTABLE WARNING DOMES SHALL COVER 2'–0" LENGTH AND FULL WIDTH OF THE RAMP FLOOR AS SHOWN ON THE DETAILS.
2. THE RAMP MAY BE YELLOW IN COLOR OR ANY COLOR WITH A 70% CONTRAST RATIO.
3. PROVIDE SEALANT OVER EXPANSION JOINTS AS PER NCDOT STANDARD SPECIFICATIONS.

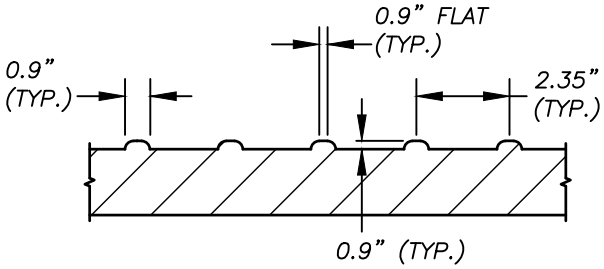

SECTION

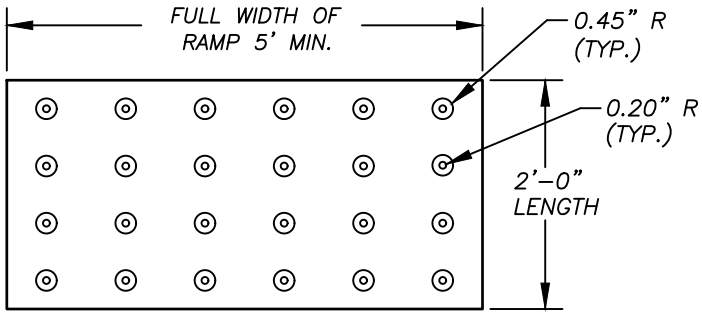

PLAN

DETECTABLE WARNING DOMES DETAIL

ST-10

CITY OF MEBANE STANDARD	CURB RAMP		
	SCALE: N.T.S.	DATE: 7/1/21	DRAWN BY: WDF

CITY OF MEBANE STANDARD

METHOD OF TIE IN

WHEN EXISTING DRIVEWAY PAVEMENT IS CONCRETE A SAW CUT 2" DEEP SHALL BE REQUIRED AT THE POINT OF TIE IN WITH EXISTING DRIVEWAY GRADE. SAW JOINT TO BE PERPENDICULAR TO EDGE OF EXISTING DRIVEWAY PAVEMENT.

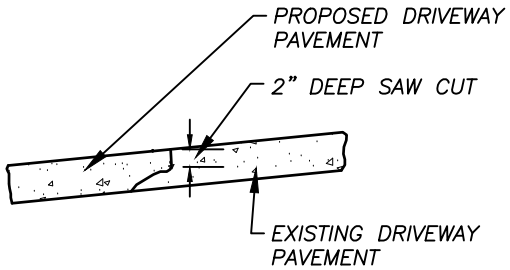

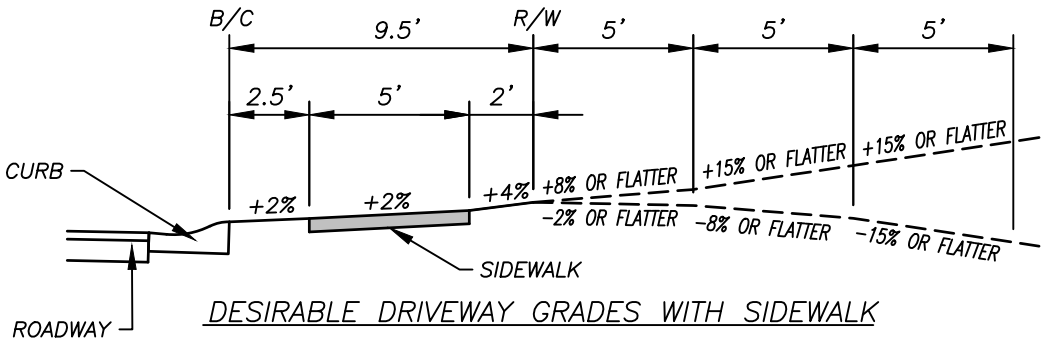

DESIRABLE DRIVEWAY GRADES WITH SIDEWALK

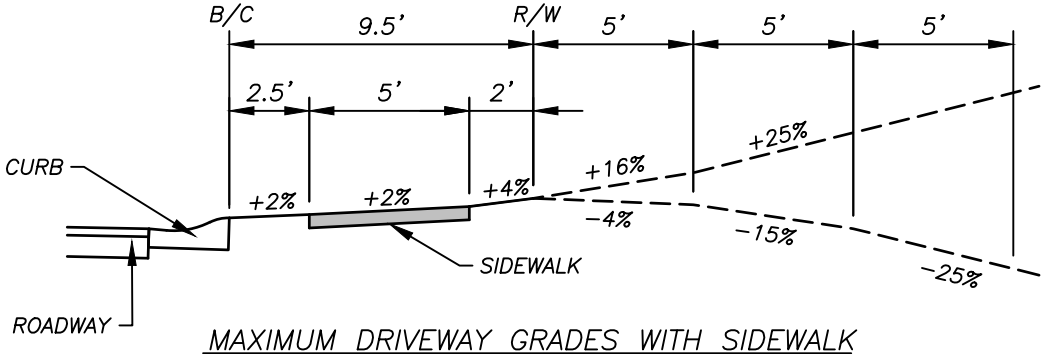

MAXIMUM DRIVEWAY GRADES WITH SIDEWALK

MAXIMUM DRIVEWAY GRADES PERMITTED ONLY WITH SPECIAL APPROVAL OF ENGINEER

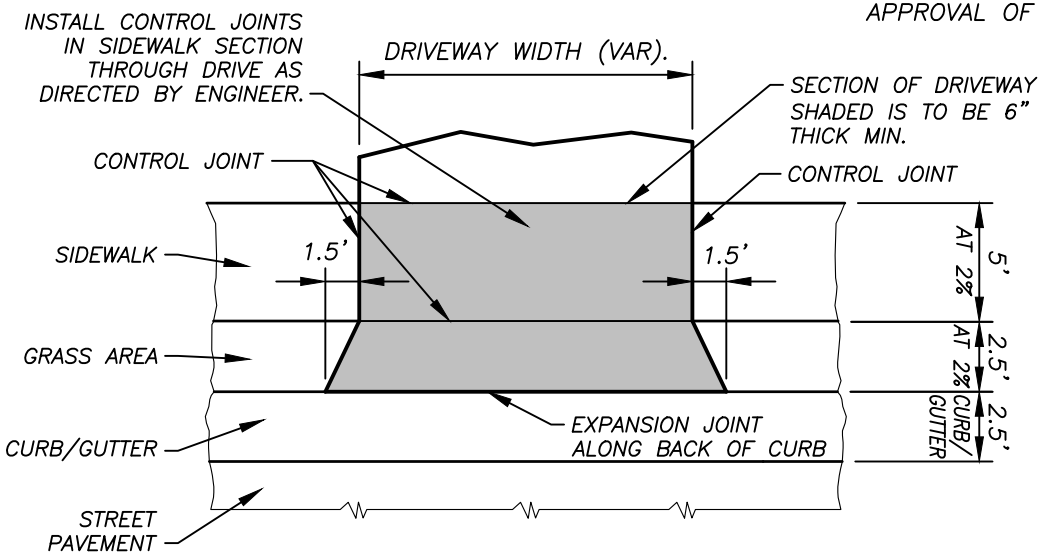

DETAIL OF PROPOSED DRIVEWAY W/ ROLLED CURB

GENERAL NOTES:

1. INSTALL CAST IRON CLEAN-OUT FRAME & COVER OVER CLEAN OUT IF CLEAN-OUT IS IN DRIVEWAY. SEE MEBANE'S SPECIFICATIONS DETAIL SS-17 FOR DETAILS.
2. WATER METER BOX IS TO LOCATED A MINIMUM OF 2'-0" FROM EDGE OF DRIVEWAY.
3. DRIVEWAY APRON IS TO BE 3,000 PSI CONCRETE AND AIR ENTRAINED.

DRIVEWAY DETAIL WITH 30" ROLLED CURB

SCALE: N.T.S.
DATE: 7/1/21
DRAWN BY: WDF

ST-11

CITY OF MEBANE STANDARD

METHOD OF TIE IN

WHEN EXISTING DRIVEWAY PAVEMENT IS CONCRETE A SAW CUT 2" DEEP SHALL BE REQUIRED AT THE POINT OF TIE IN WITH EXISTING DRIVEWAY GRADE. SAW JOINT TO BE PERPENDICULAR TO EDGE OF EXISTING DRIVEWAY PAVEMENT.

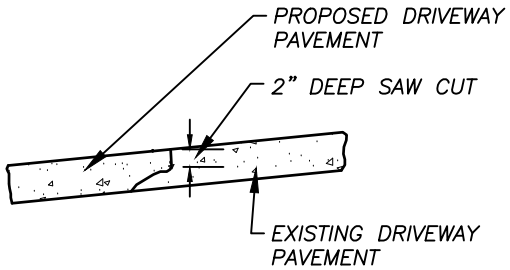

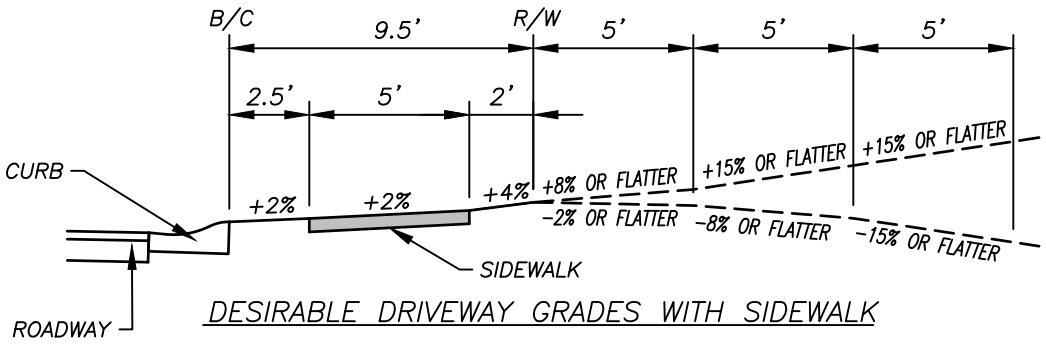

DESIRABLE DRIVEWAY GRADES WITH SIDEWALK

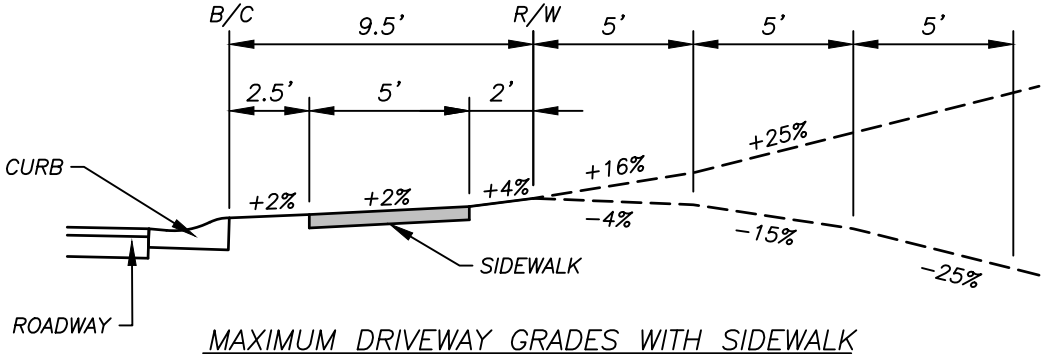

MAXIMUM DRIVEWAY GRADES WITH SIDEWALK

MAXIMUM DRIVEWAY GRADES PERMITTED ONLY WITH SPECIAL APPROVAL OF ENGINEER

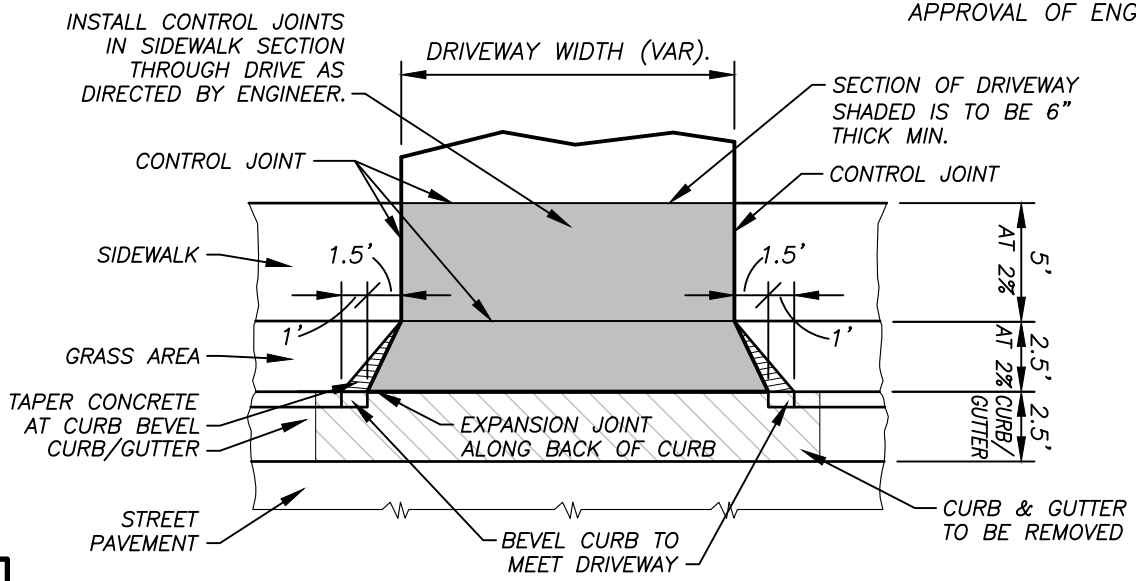

DETAIL OF PROPOSED DRIVEWAY W/ STANDARD CURB

GENERAL NOTES:

1. INSTALL CAST IRON CLEAN-OUT FRAME & COVER OVER CLEAN OUT IF CLEAN-OUT IS IN DRIVEWAY. SEE MEBANE'S SPECIFICATIONS DETAIL SS-17 FOR DETAILS.
2. WATER METER BOX IS TO LOCATED A MINIMUM OF 2'-0" FROM EDGE OF DRIVEWAY.
3. DRIVEWAY APRON IS TO BE 3,000 PSI CONCRETE AND AIR ENTRAINED.

DRIVEWAY DETAIL WITH 30" STANDARD CURB

SCALE: N.T.S. | DATE: 7/1/21 | DRAWN BY: WDF

ST-12

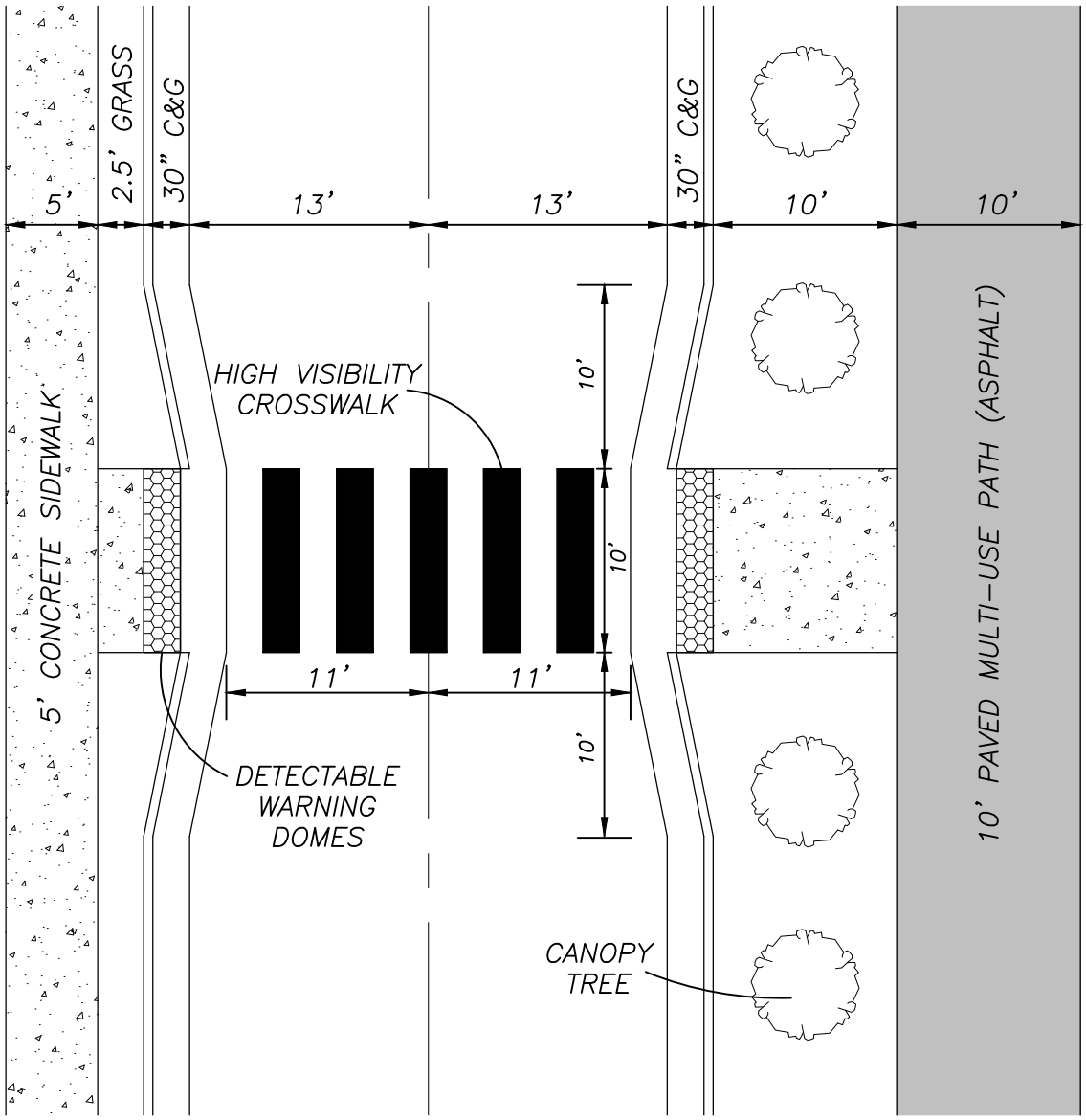

ST-13

CITY OF MEBANE STANDARD	BUMPOUT CROSSWALK DETAIL FOR MID-BLOCK CROSSING		
	SCALE: N.T.S.	DATE: 7/1/21	DRAWN BY: WDF

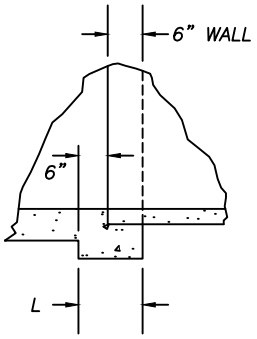

PART SECTION
6" WALL

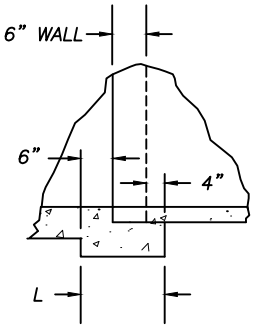

PART SECTION
6" WALL/4" LIP

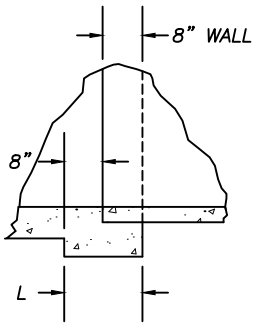

PART SECTION
8" WALL

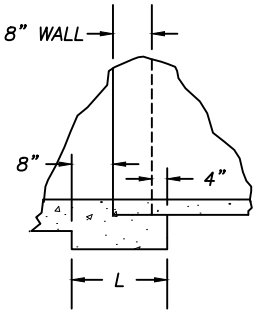

PART SECTION
8" WALL/4" LIP

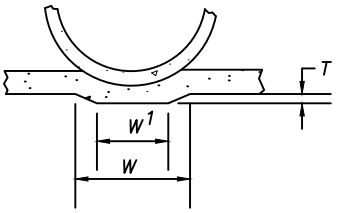

PART SECTION OF END ELEVATION

TABLES OF QUANTITIES FOR PIPE SET IN PAD						
PIPE D	"W" DIM	"W1" DIM	"T" DIM	C.Y. QUANTITIES WHEN L IS		
				12"	16"	20"
12"	1'-1 7/8"	0'-7 7/8"	0'-1 3/4"	0.005	0.007	0.008
15"	1'-3 5/8"	0'-9 1/8"	0'-9 7/8"	0.006	0.008	0.010
18"	1'-5 1/4"	0'-10 3/8"	0'-2"	0.007	0.010	0.012
24"	1'-8 3/4"	1'-0 1/8"	0'-2 1/2"	0.011	0.014	0.018
30"	2'-0 1/4"	1'-2 3/4"	0'-2 3/4"	0.014	0.018	0.023
36"	2'-3 3/4'	1'-5 3/8"	0'-3"	0.017	0.023	0.025
42"	2'-7 1/8"	1'-7"	0'-3 1/2"	0.075	0.030	0.036
46"	2'-10 5/8"	1'-8 3/4"	0'-4"	0.028	0.038	0.047
54"	3'-2 1/8"	1'-10 1/2"	0'-4 1/2"	0.035	0.047	0.058
60"	3'-5 5/8"	2'-0 1/4"	0'-5"	0.042	0.056	0.071
66"	3'- 9"	2'-2 1/4'	0'-5 1/2"	0.050	0.067	0.084
72"	4'-0 1/2'	2'-3 3/4"	0'-6"	0.058	0.078	0.098

GENERAL NOTES:

THIS STANDARD SHALL BE USED WITH ALL DRAINAGE STRUCTURES USING REINFORCED CONCRETE PIPE SET IN BASE SLAB.

ST-14

CITY OF MEBANE STANDARD

STANDARD CONCRETE BASE PAD FOR DRAINAGE STRUCTURES

SCALE: N.T.S. | DATE: 7/1/21 | DRAWN BY: WDF

CITY OF MEBANE STANDARD

CURB INLET DETAILS

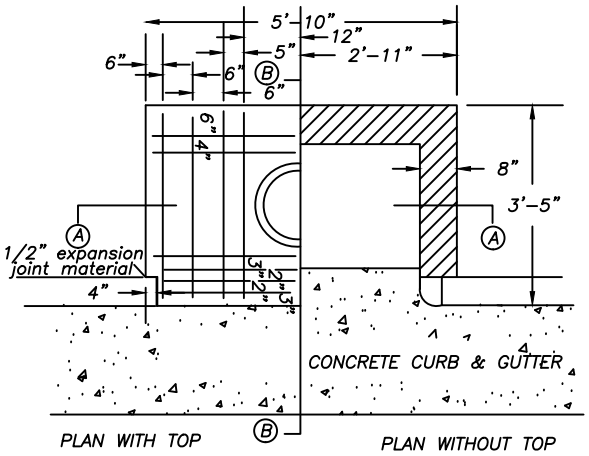

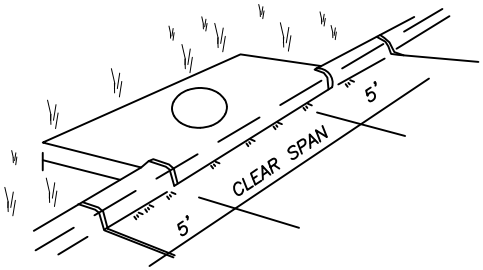

GENERAL NOTES:

1. ALL CURB INLETS OVER 4'-0" IN DEPTH TO BE PROVIDED WITH STEPS 12" ON CENTER.
2. CLASS "A" CONCRETE 3000 PSI TO BE USED.
3. BRICK MASONRY CAN BE STANDARD CLAY BRICK, JUMBO BRICK, OR CONCRETE BRICK.
4. FOR 8'-0" IN HEIGHT OR LESS USE 8-INCH WALL. OVER 8'-0" IN HEIGHT USE 12-INCH WALL TO 6'-0" FROM TOP OF WALL AND 8-INCH WALL FOR THE REMAINING 6'-0".
5. IF REINFORCED CONCRETE PIPE IS SET IN BASE OF SLAB OF BOX USE STANDARD SPECIFICATION DRAWING ST-14.
6. MANHOLE RING AND COVER IN CONCRETE TOP SHALL CONFORM TO STANDARD SPECIFICATION DRAWING NO. ST-19.
7. REINFORCING STEEL SHALL CONFORM TO ASTM A-615 GRADE 60.

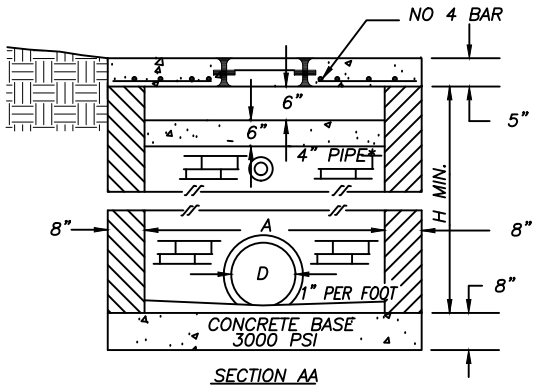

SECTION AA

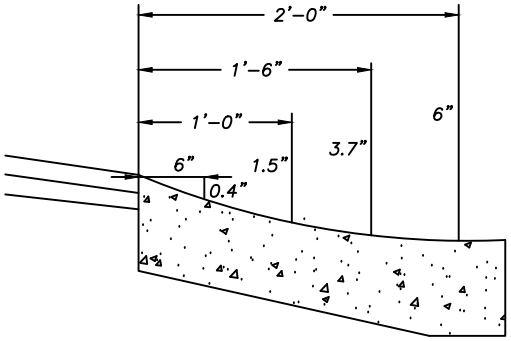

PARABOLIC CURVE

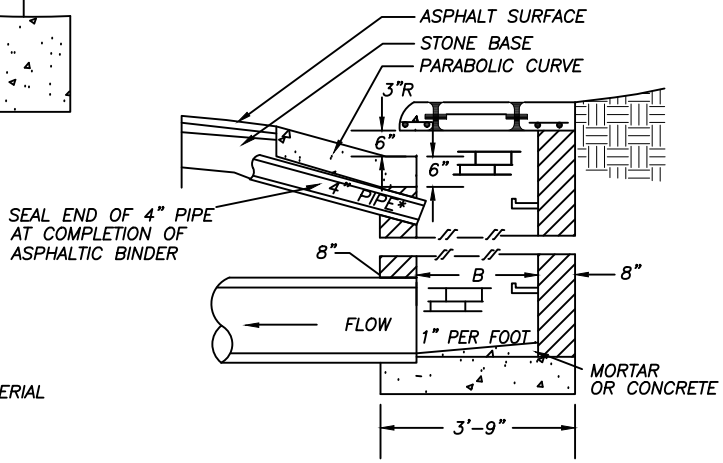

SECTION BB

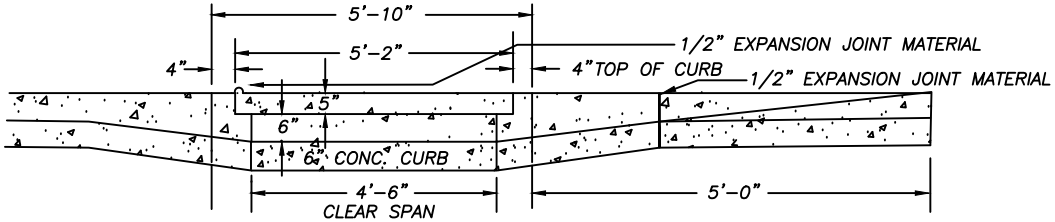

* 4" CAST IRON SOIL PIPE OR PVC

SCALE:	N.T.S.
DATE:	7/1/21
DRAWN BY:	WDF

ST-15

CITY OF MEBANE STANDARD

CURB INLET DETAILS

SCALE: N.T.S.
DATE: 7/1/21
DRAWN BY: WDF

ST-16

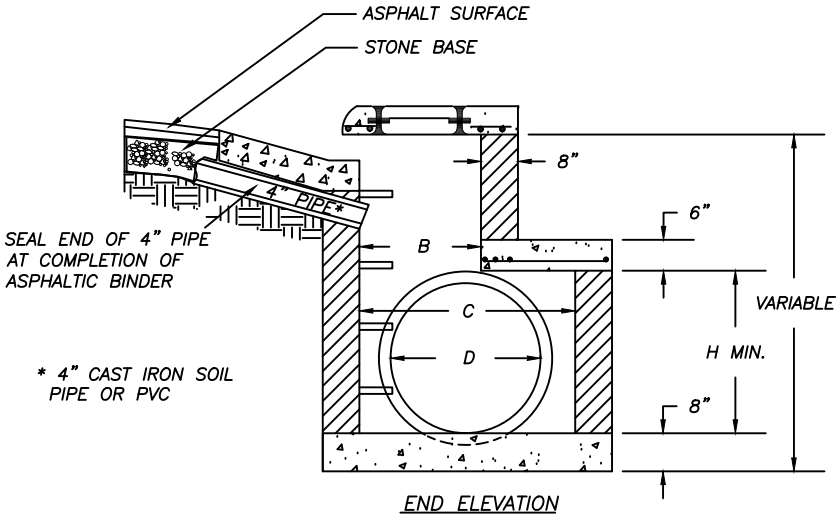

END ELEVATION

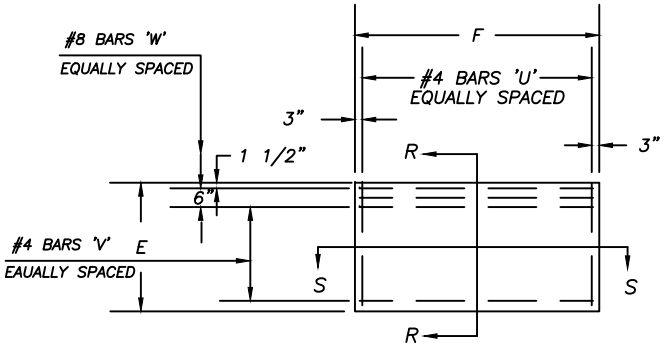

PLAN OF TOP SLAB

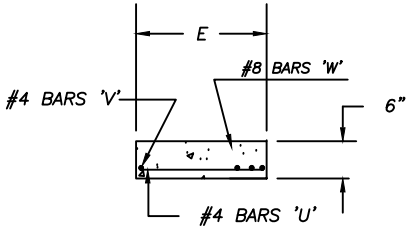

SECTION R–R

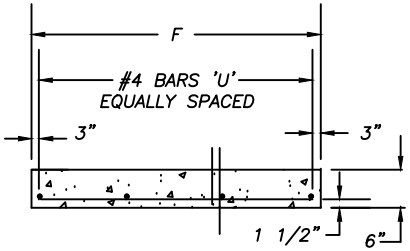

SECTION S–S

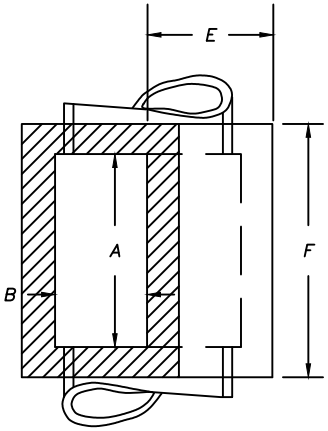

PLAN

DIMENSIONS FOR BRICK CURB INLET												
DIMENSIONS OF BOX AND PIPE					SLAB DIMENSION		REINFORCING					
PIPE	SPAN	WIDTH	WIDTH	HEIGHT			BARS U		BARS V		BARS W	
D	A	B	C	H	E	F	NO.	LENGTH	NO.	LENGTH	NO.	LENGTH
12"	4'–6"	2'–3"	–	3'–1"	–	–		–		–		–
15"			–	3'–1"	–	–		–		–		–
18"			–	3'–3"	–	–		–		–		–
24"			–	3'–9"	–	–		–		–		–
30"			3'–4"	3'–4"	1'–9"	5'–10"	6	1'–5"	3	5'–6"	3	5'–6"
36"			3–'10"	3'–10"	2'–3"			1'–11"	4			
42"	4'–6"		4'–6"	4'–6"	2–'11"			2'–7"	5			
48"	6'–0"		5'–0"	5'–0"	3'–5"			3'–1"	6			
54"	6'–0"	2'–3"	5'–8"	5'–6"	4'–1"	5'–10"	6	3'–9"	7	5'–6"	3	5'–6"

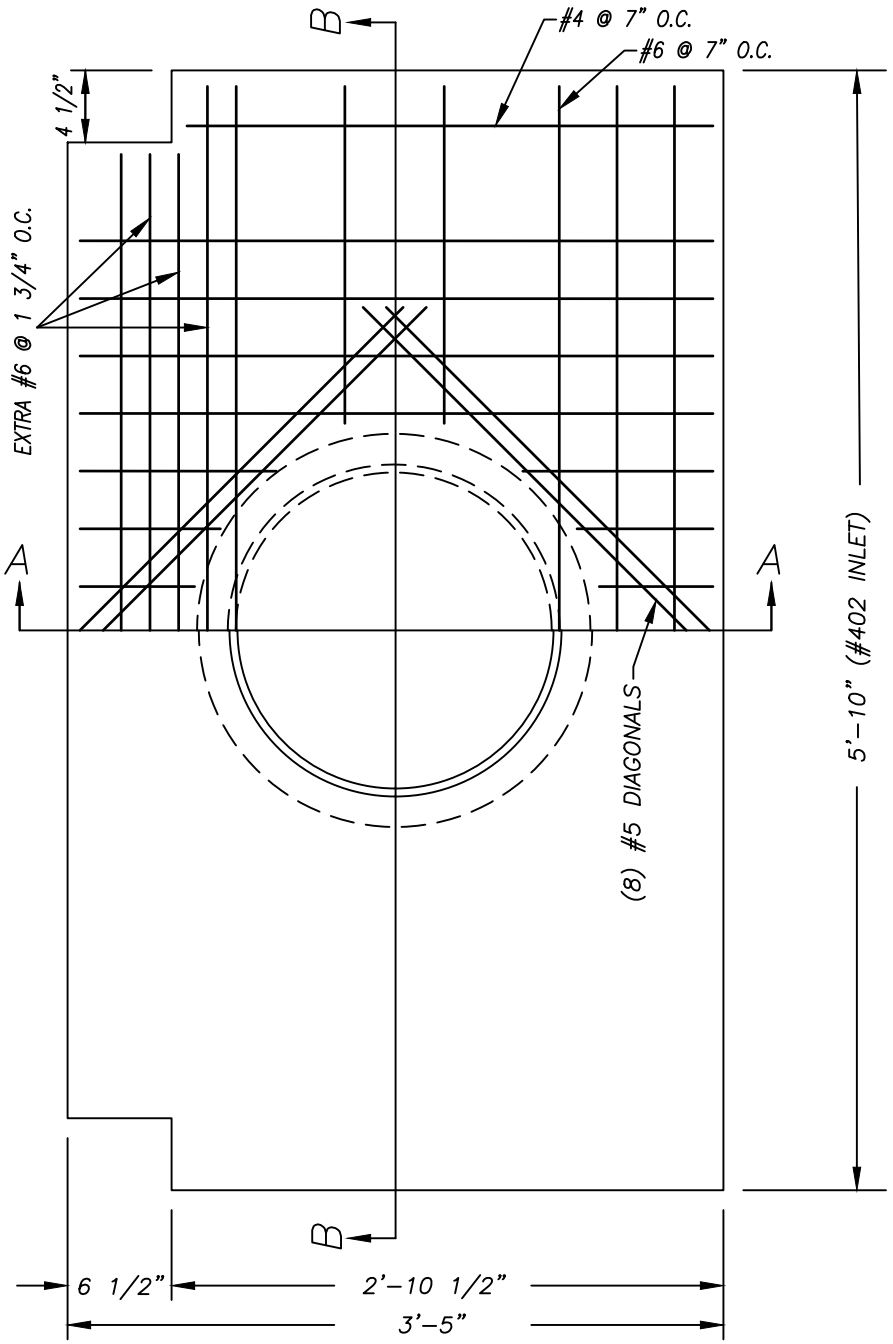

PLAN

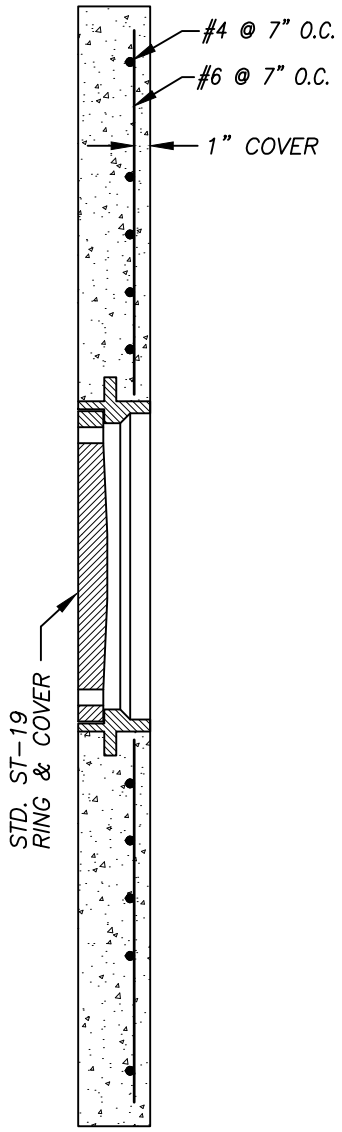

SECTION B-B

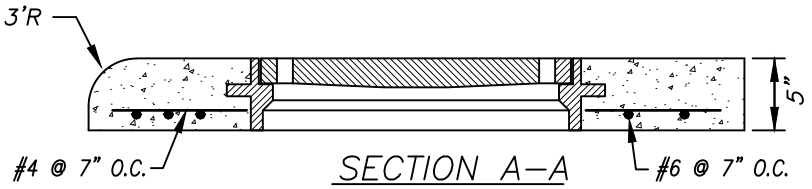

SECTION A-A

NOTES:

1. CONCRETE: 28 DAY COMPRESSIVE STRENGTH f'c = 4,500 PSI.
2. REINFORCING: ASTM A-615, GRADE 60.
3. ALL COVER TO REINFORCING IS 1".
4. ALL STEEL CUT OUT FOR OPENINGS WILL BE REPLACED, 1/2 THE REINFORCING ON EACH SIDE OF OPENING.

THE MANUFACTURER SHALL STAMP OR STENCIL ITS LOGO OR NAME IN TWO LOCATIONS ON THE SIDE OR REAR EDGES OF THE TOP

FOR USE ON #402 INLET BOX

ST-17

CITY OF MEBANE STANDARD	STD. PRECAST CONCRETE CURB INLET TOP FOR STD. 402 CURB INLET		
	SCALE: N.T.S.	DATE: 7/1/21	DRAWN BY: WDF

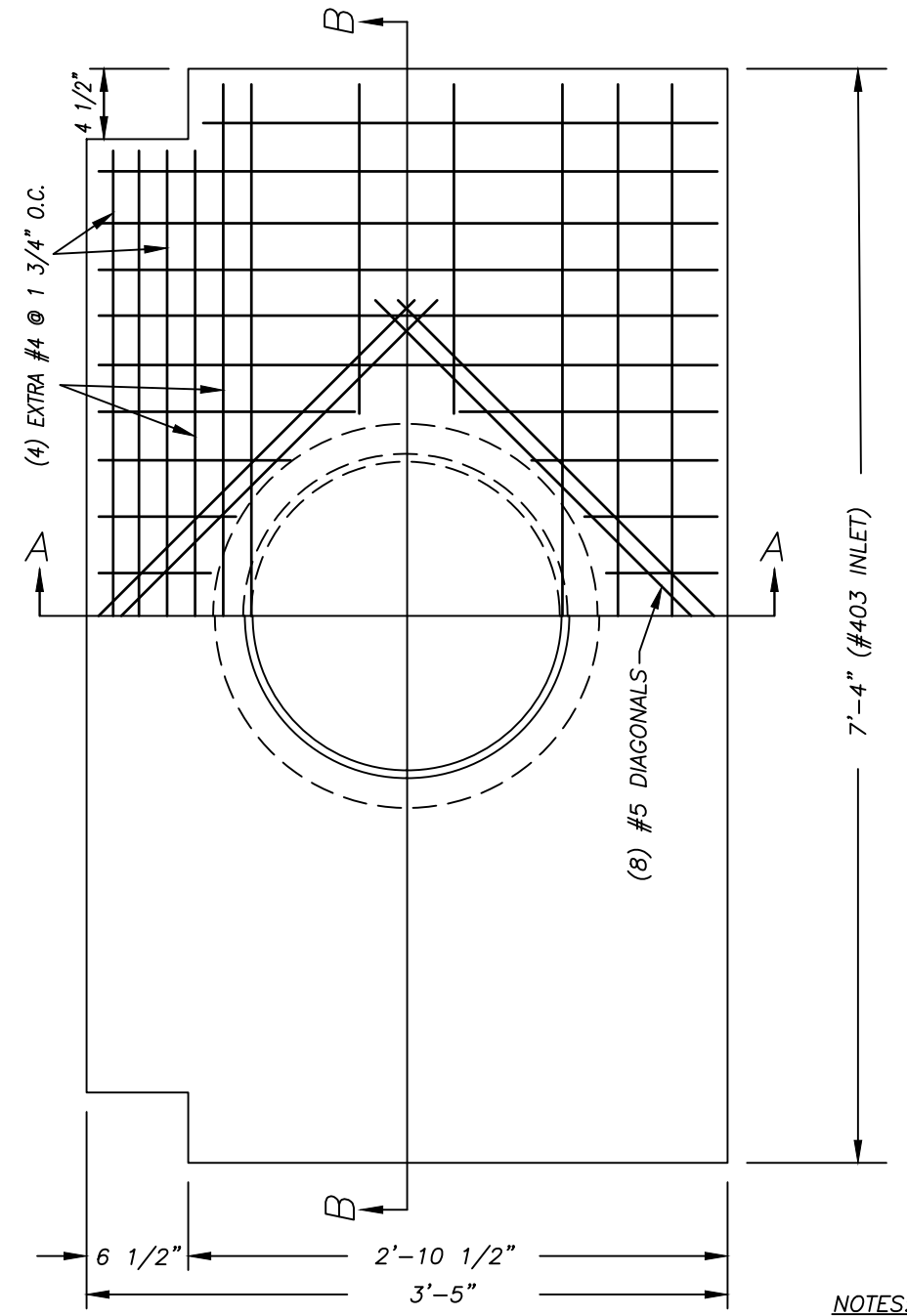

PLAN

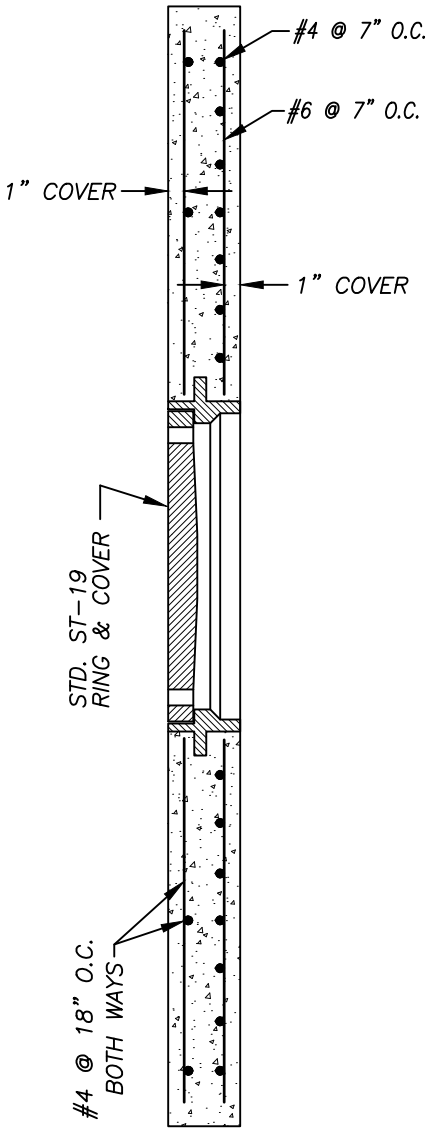

SECTION B-B

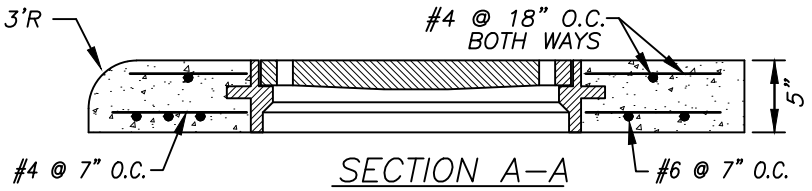

SECTION A-A

NOTES:

1. CONCRETE: 28 DAY COMPRESSIVE STRENGTH f'c = 4,500 PSI.
2. REINFORCING: ASTM A-615, GRADE 60.
3. ALL COVER TO REINFORCING IS 1".
4. ALL STEEL CUT OUT FOR OPENINGS WILL BE REPLACED, 1/2 THE REINFORCING ON EACH SIDE OF OPENING.

THE MANUFACTURER SHALL STAMP OR STENCIL ITS LOGO OR NAME IN TWO LOCATIONS ON THE SIDE OR REAR EDGES OF THE TOP

FOR USE ON #403 INLET BOX

ST-18

CITY OF MEBANE STANDARD	STD. PRECAST CONCRETE CURB INLET TOP FOR STD. #403 CURB INLET		
	SCALE: N.T.S.	DATE: 7/1/21	DRAWN BY: WDF

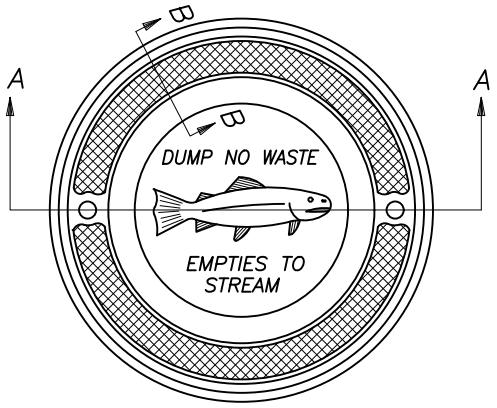

PLAN

RING – 70 LBS.
COVER – 118 LBS.

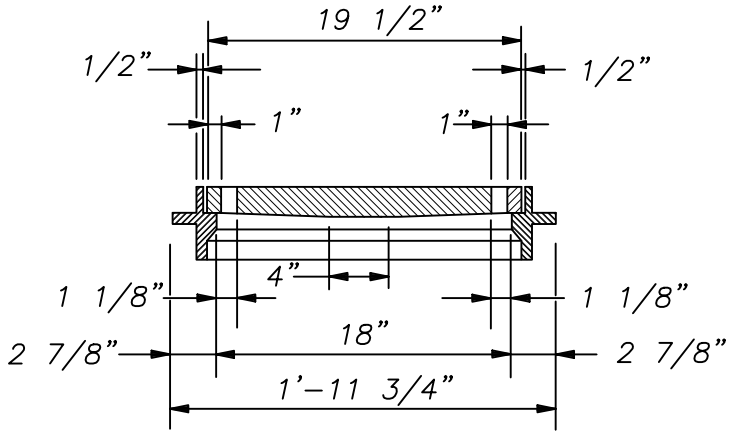

SECTION A–A

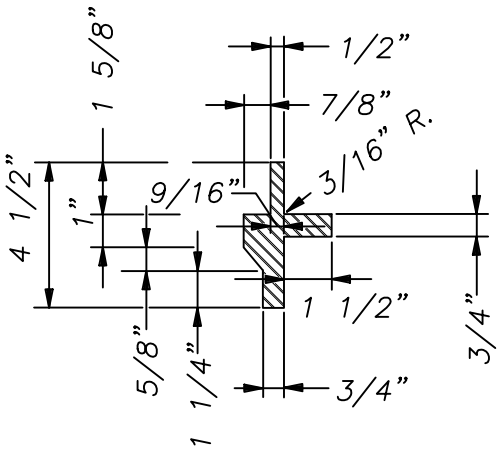

SECTION B–B

ST-19

CITY OF MEBANE STANDARD	INLET RING & COVER DETAIL		
	SCALE: N.T.S.	DATE: 7/1/21	DRAWN BY: WDF

SMALL BOX

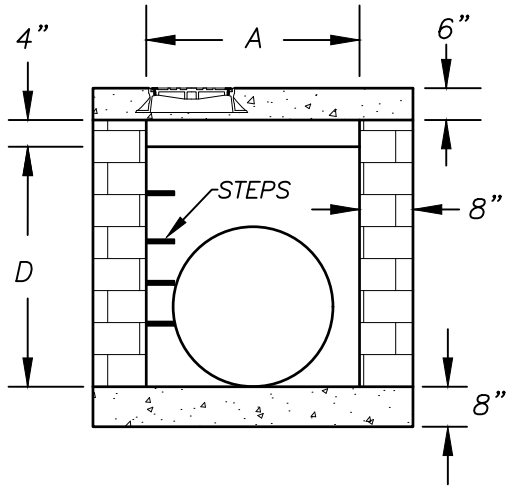

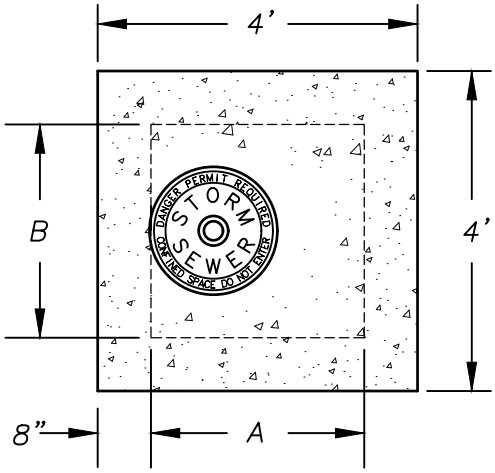

LARGE BOX

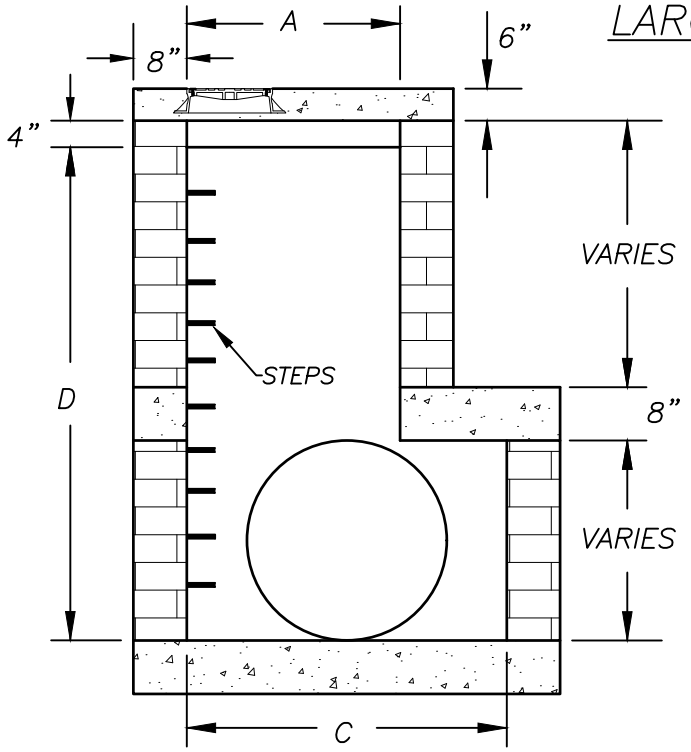

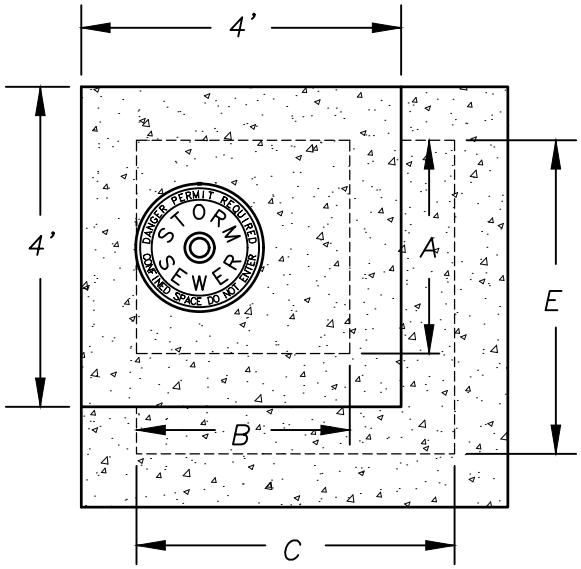

MINIMUM DIMENSIONS FOR BRICK YARD INLET						
PIPE (IN)	A	B	SMALL BOX D	C	E	LARGE BOX D
12	2'–8"	2'–8"	3'–1"			
15	2'–8"	2'–8"	3'–3"			
18	2'–8"	2'–8"	3'–6"			
24	2'–8"	2'–8"	4'–0"			
30	↓	↓		5'–0"	5'–0"	4'–6"
36				5'–0"	5'–0"	5'–0"
42				6'–0"	6'–0"	5'–6"
48				6'–0"	6'–0"	6'–0"

ST-20

CITY OF MEBANE STANDARD

STANDARD BRICK YARD INLET 12" THRU 48" PIPE

SCALE: N.T.S. | DATE: 7/1/21 | DRAWN BY: WDF

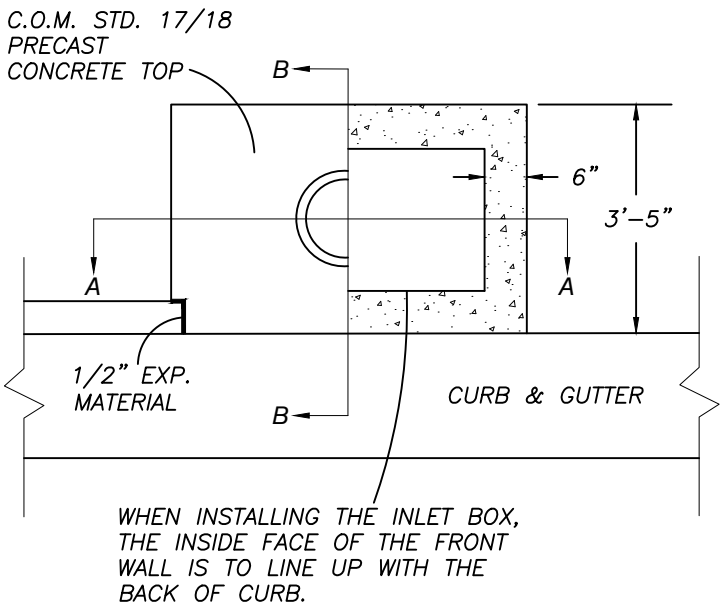

NOTES:

THE USE OF PRECAST CONCRETE CURB INLETS IS SUBJECT TO APPROVAL OF THE CITY ENGINEER.

CONSTRUCTION AND USE OF PRECAST CONCRETE STRUCTURES SHALL ADHERE TO ALL PERTINENT REQUIREMENTS OF THE C.O.M. STD. 402/403 BRICK MASONRY STRUCTURES.

STEEL DESIGN IS NOT SHOWN ON THIS DRAWING. STEEL DESIGN IS THE RESPONSIBILITY OF THE MANUFACTURERS ENGINEER AND SHALL BE SHOWN ON SEALED SHOP DRAWINGS SUBMITTED FOR APPROVAL FOR USE IN THE CITY OF MEBANE DRAINAGE INFRASTRUCTURE.

DIMENSIONS TO MATCH EXTERIOR SIZING LISTED IN "DIMENSIONS FOR BRICK CURB INLET" CHART ON ST–16. ANY BOXES THAT CAN NOT MATCH DIMENSIONS LISTED ARE TO BE BUILT IN THE FIELD.

FOR PRECAST CONCRETE MODELS OF THIS STRUCTURE, THE MANUFACTURER SHALL STAMP OR STENCIL ITS LOGO OR NAME ON THE INSIDE AND OUTSIDE OF THE STRUCTURE.

PRECAST STRUCTURE SHOULD BE BROUGHT UP TO FINAL GRADE USING BRICK MASONRY.

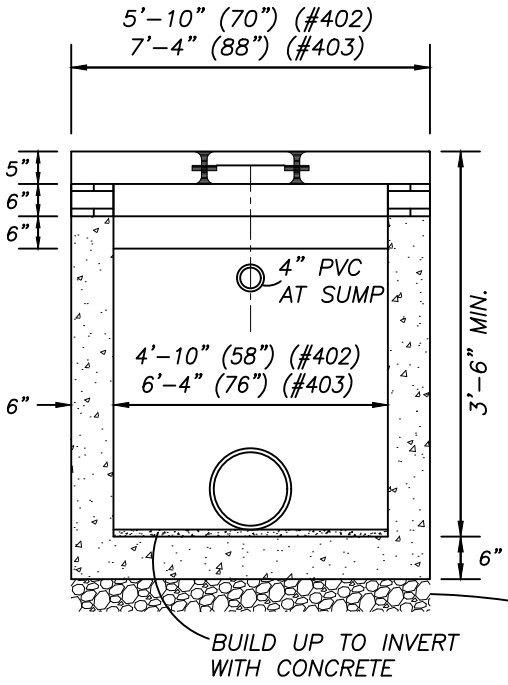

SECTION A-A

#57 STONE BASE

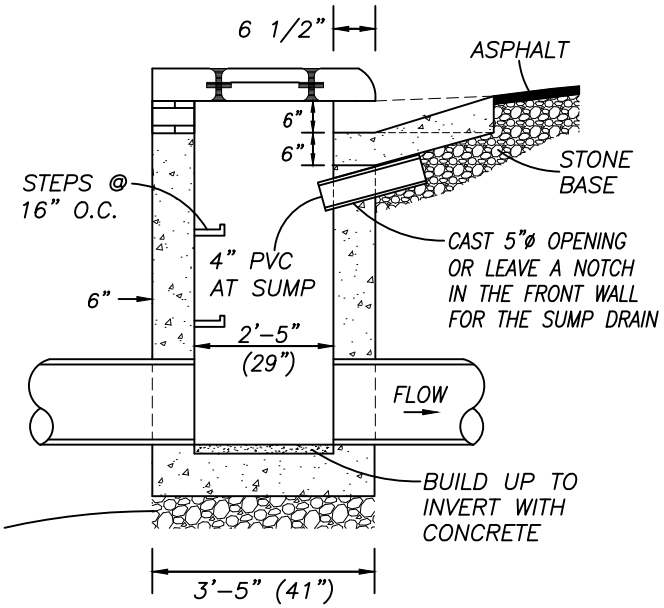

SECTION B-B

ST-21

CITY OF MEBANE STANDARD	STD. PRECAST CONCRETE CURB INLET		
	SCALE: N.T.S.	DATE: 7/1/21	DRAWN BY: WDF

WATER TAPS OVER 1”

1. Water taps over 1” shall be made by others to City specs.
2. Copper pipe, brass valves and brass fittings shall be used with prior City approval.
3. A by-pass shall be used on all metered connections 1 ½” and greater.
4. All meters and meter vaults shall be placed on the property line or right of way.
5. All backflow assemblies shall be tested prior to City acceptance.
6. All RPZ backflow prevention devices shall be above ground in a “Hot Box” with an electric power outlet for a heater.

SEWER TAPS

1. All sewer taps shall be made by the City unless otherwise specified.
2. 4” sewer taps shall be the minimum size permitted by the City.
3. All sewer services shall be with the water service.
4. All sewer services shall have a cleanout at the property line.
5. All service pipe shall be PVC, Schedule 40.

FIRE LINES AND SPRINKER SYSTEMS

1. All vaults and detector checks shall be set on the property line or right of way.
2. Vaults shall have a provision for drainage.
3. All RPZ backflow assemblies shall be above ground in “Hot Box” or equal enclosure and tested prior to City acceptance. Backflow assemblies are allowed in vertical risers in buildings where access can be readily gained by the City.
4. All Fire Department connections shall be labeled (FDC) with 6-inch letters in front of building with directional arrows pointing toward location.

BROKEN OR DAMAGED CURB AND GUTTER REPLACEMENT POLICY

The following methods will be permitted for replacement of broken or damaged curb and gutter:

1. Replace the complete section of curb and gutter.

2. Replace a 5-foot section of curb and gutter with 2 - #6 rebar on each end of the 5-foot section embedded 1-foot deep into each piece of original curb doweled in with non-shrink grout or approved epoxy.

3. Replace a 5-foot section of curb and gutter without the rebar and give an additional 12-month warranty for a total of 24 months after acceptance by the City.

CONSTRUCTION INSPECTION

The City of Mebane has Engineering Site/Subdivision Construction Plan Review and Inspection Fees that cover additional oversite per City policy of private and public water, sewer, roads/alleys, storm drain, stormwater management, sidewalks/multi-use paths, and water/sewer services. Upon site/subdivision construction plan approval and payment of related fees and having obtained all required permits and encroachment agreements a preconstruction conference can be held for the project where project requirements are then reviewed. Additionally, the City must be informed of all testing with advanced notice as required and witness all tests prior to acceptance by the City. All costs associated with tests, etc., shall be borne by the contractor. It is noted that the developer/contractor will need to provide compaction testing in trenches and roads by a certified geotechnical company at their own cost and at an interval as approved by the City.

All work that requires certification upon completion is the responsibility of the design engineer who has sealed the approved plans.

Any substantial changes made in the approved plans shall be made by the design engineer and copies provided to the city for approval prior to implementation of the changes. Should such changes require a permit modification, the design engineer shall provide such revised plans and permits to affect approval of the modifications.

Conduit layouts to be submitted to the City with the construction drawings.

CONSTRUCTION AS-BUILTS

The City shall be furnished a complete set of “As-Built” plans at the completion of all water, sewer and street projects. No service will be provided until such “as-built” plans are provided.

“Certification As-Builts” shall include actual invert elevations of all sewer and storm sewer manholes, catch basins, junction boxes, sewer clean outs, water meters steel encasement pipes and as-installed separations labeled at all crossings. If curb and finished grades have not been constructed at time of preparation of certification as-builts, proved note stating, “For certification purposes only, all finish grades listed are based on plan grades and will be updated once installed with As-Built elevations.” The “Certification As-Builts” shall also include all valve and blow off “tie downs” to at least two (2) permanent markers and provided on 8 1/2" x 11" sheets as Intersection Drawings with each street name clearly identified. Certification As-Builts shall be provided to The City prior to requesting State Certifications.

“Final As-Builts” shall include all information from the Certification As-Built as well as actual rim, top of grate, top of curb, grading, pad elevations, and drainage swell elevations. Provide one (1) reproducible copy and one (1) copy of the “Final As-Builts” in both paper and digital formats. CAD files including water, storm, sewer, streets and lots shall be provided. Final As-Builts shall be provided to The City prior to requesting plat recordation.

SEWER LINE TIE-INS

1. All sewer tie-ins to existing manholes shall be cored with a boot.
2. All 6” or greater sewer service lines shall tie into manholes.

PARKING LOTS

1. All parking lots shall be paved.
2. All parking lots to have standard curb and gutter.
3. Curb and gutter to meet the same specification as in street specifications.

City of Mebane Project Requirements and Related Timing of Procedures

1. **Preconstruction checklist**
   - Water permit
   - Sewer permit
   - Buffer authorization
   - Erosion control permit
   - Engineering Construction Plan Review and Inspection Fees paid
   - NCDOT driveway permit
   - DOT encroachment/bond in place
   - Submittals prior to placement
   - Geotechnical spreadsheet approved
   - Any special provisions
2. **As-Builts**
   - List as-built condition of utility separations verified by pictures or survey during construction
   - Sewer grades and CO locations
   - Storm drain grades
   - Hydrant location and grades as well as water meter locations
   - Lot and drainage swale grades
   - TOC shots at lot lines and mid lot as well as along radii at crosswalk locations
   - Provide valve and blow off "tie down" sheets with as-built submittal
   - Provide CAD files with as-built submittal
3. **Certification Process**
   - Complete utility installation and testing
   - Submit as-builts for City approval
   - Once as-builts have been approved the water line can then be chlorinated.
   - Submit certification package for City signature
   - Certification package should include a site map highlighting items covered by the certification
   - Once signed by the City the package will be returned to the design engineer for submission to the State
   - State will provide letter of final acceptance for water
   - Design engineer to provide proof of submission to the State for sewer
   - Once final acceptance or proof of submission is received by the City the line can be placed into service.
4. **Roadway**
   - All conduit crossings to be placed prior to preparing for curb or roadway installation
   - Curb stakes and string line
   - Curb grade check / handicap ramp locations to be staked
   - Densities under curb
   - Proof roll subgrade for curb
   - Curb installation

- Grade check on road subgrade
- Dirt subgrade densities in roadway
- Proof roll subgrade
- Stone placement*
- *Any excavation between back of curbs after stone placement will require diggable flowable fill for backfill
- Stone grade check
- Stone densities
- Proof roll stone base
- Asphalt placement
- Asphalt cores

5. **Grading (**Once curb is installed)
   - Have pad corners and swells staked with C/F to finish grades and hub elevations
   - If crawl lots – stake approx. house corners and swells
   - Borrow pits to be surveyed prior to backfill
   - ROW graded at 2% to property corners prior to 3rd party utility placement
6. **Utilities** (sewer, storm drain, water)
   - Deepest utility installed first
   - MH maximum grade ring adjustment 8" otherwise should be adjusted via riser section
   - Separations documented via survey or pictures with labels of locations
   - All third-party utilities not obtaining encroachment agreement to have roadway conduits installed prior to curb installation
7. **Testing** – after all utilities installed
   - Sewer – Pressure test lines, vacuum test MH's, mandrel PVC, jet and video main and services
   - Water – Pressure test, obtain as-builts, chlorinate and bac-t, obtain certification prior to activation
   - Storm Drain – Video
   - Pre-testing required on all utilities prior to requesting official test
   - Recommend pre-testing water main prior to service installation
   - Recommend completing all testing prior to curb installation
8. **Geotechnical**
   - Geotechnical spreadsheet to be completed and approved prior to start of construction.
   - All test below subgrade to be completed during installation of associated utility.
   - All subgrade testing to be completed once fine grade of subgrade has been achieved (ex. After placement of string line for curb and prior to requesting proof roll)
   - Contractor and Geotech shall proof roll and make all necessary repairs prior to proof roll being conducted by the City
   - Geotechnical testing daily field reports should be provided on a weekly basis during construction. Tests conducted and reported on the daily field reports should be updated on the geotechnical spreadsheet which should accompany the daily field reports.
   - No geogrid or fabric allowed within the right of way without approval by the City Engineer

CONSTRUCTION DOCUMENTS CHECKLIST FOR PLAN REVIEW

Section 1: General Plan Preparation Guidelines

- ☐ Sheets shall be no larger than 36” x 24” plan and profile paper.
- ☐ Minimum text size shall be 1/8"
- ☐ Scale on plan view shall be no smaller than 1” = 50’; scale on profile view shall be no smaller than 1” = 50’ horizontally and 1” = 5’ vertically using a grid showing 1’ intervals.
- ☐ Cover sheet shall have a vicinity map at a scale no smaller than 1” = 2000’.
- ☐ Provide a legend indicating existing and proposed lines, features and symbols.
- ☐ Cover sheet shall include all general notes, owner’s name, telephone number, and mailing address.
- ☐ All elevations shall be given in relation to mean sea level; elevations in profile view shall be labeled in 10’ intervals on the heavy lines (Ex. 350, 360).
- ☐ Benchmark elevations and locations shall be shown on plan view.
- ☐ Plan views shall have a north arrow on each drawing.
- ☐ Each drawing shall have the following information in the title block: Street or project title, limits, horizontal and vertical scales, original date, revisions date, drawing number, checked by and drawn by. Recommended placement is lower right-hand corner.
- ☐ All drawings sealed, signed and dated by a NC Professional Engineer.
- ☐ Plan view shall show all actual street names. State road numbers shall be shown if applicable. Plan view should also indicate whether street is asphalt, concrete, gravel or dirt. Proposed street & Right-of-way widths will be dimensioned back-to-back and labeled in plan view.
- ☐ Plan view shall show proposed and existing curb and gutter, storm sewers, drainage structures, driveway pipes, water mains, sanitary sewer mains, etc. All available elevations shall be shown on the profile view. Direction of flow shall be shown on plan view for all sanitary sewers and storm drains.
- ☐ Existing utility lines shall be shown and labeled on plan view and indicated in the legend.
- ☐ Plans shall show final proposed locations and dimensions of all water, storm drain, and sanitary sewer lines, including services to each property line for water and sanitary sewer, devices to be installed on the system, catch basins, culverts, ditches, including grades, pipes sizes, elevations, assumptions, calculations, invert elevations for all inlets and manholes and profiles of sanitary sewer lines.
- ☐ Plan shall bear the note: “All construction to be in accordance with all City of Mebane, Specifications and Standard Details, latest edition.”
- ☐ All existing and proposed water, storm drainage and sanitary sewer easements shall be shown on all applicable sheets.

Section 2: Water Distribution Design

Applicant Validation N/A	Applicant Validation Included	COM Staff Check	
____	_____	____	All water distribution system extensions shall be designed to provide fire flow plus peak daily water demand. The peak daily water demand is based on 2.5 times the average daily water demand for the type of user. The distribution system shall be designed to maintain a minimum of 20 PSI at all points in the distribution system under all conditions of usage, including fire flow using a C factor of not more than 130. Fire flow demand varies with the type and size of user; however, the following shall be used as the minimum fire flow demand to design the distribution system extensions: A. Residential Buildings 1. One and two family dwellings if more than 11 ft. of separation between buildings -------- 1000 GPM 2. One and two family dwellings if less than 11 ft. of separation between buildings -------- 1500 GPM 3. Multifamily units--------- 1500 GPM minimum, but refer to Table B105.1 in the NC Fire Prevention Code if more applies. B. Commercial/Business Users----- 2000 GPM minimum, but refer to Table B105.1 in the NC Fire Prevention Code if more applies. C. Industrial Users ---------- 2500 GPM minimum, but refer to Table B105.1 in the NC Fire Prevention Code if more applies. At the time of preliminary development plans, a preliminary design shall be submitted which indicates that the proposed distribution system extensions comply with the above requirements. Upon submittal of the construction plans, detailed modeling documentation shall be submitted showing compliance with the above requirements. Acceptable modeling programs include Watercad, Hydraulicad, WatSys by Civilsystems,and other modeling programs approved in advance. The minimum size water line extension shall be 8”, except that in cul-de-sacs, 6” is allowed if less than 600 ft. in length and 4” is allowed if less than 250 ft. in length.
____	_____	____	In all residential districts, the maximum distance between fire hydrants, measured along public street centerlines and/or other private travel ways shall be 500 feet.
____	_____	____	Valves should be installed on all branches from feeder mains and between mains and hydrants according to the following schedule: a. four (4) valves at X's (crosses), b. three (3) valves at T's (tees) and c. one (1) valve on single hydrant branch All fittings, valves, hydrants, plugs, etc. shall be indicated in a fitting box with the number of items.
____	_____	____	Water mains 12" and larger in diameter which have a change in elevation of fifteen feet or greater shall have an air release at high points.
____	_____	____	Show water service to each lot and show the water meter 1 foot on street side of the right-of-way line. The developer will be responsible for the cost of relocating services and meters that fall within driveways.
____	_____	____	Multi-family, Commercial and Industrial Developments - Hydrants shall be located within 250 feet of most remote portion of building(s).

____	_____	____	Minimum Radius for ductile iron pipe without fittings: 4" - 125' 6" - 145' 8" - 195' 10" - 195' 12" - 195' 14" - 285' 16" - 285' 18" - 340' 20" - 340' 24" - 450"
____	_____	____	On all 12" and larger water main provide joint restraint calculations for all fittings, valves and dead ends.
____	_____	____	Main line valves on straight runs between street intersections shall be spaced no greater than the distances given below and shall be located within fifty (50) feet of the nearest hydrant to their location. Main Size Maximum Spacing 6"- 600' 8"- 900' 12"- 1000' 16"- 1000' 24"- 1500'
____	_____	____	When phasing a project, locate valves in order to not place any existing service out of water. When extending water line to a new phase add additional valves beyond above requirements if necessary.
____	_____	____	Indicate in profile vertical separation 18" water to storm drain 24" water to a sanitary sewer.
____	_____	____	Provide 3 foot of cover minimum over water main (8” or less),4 foot of cover (10” or greater) and 5 foot of cover minimum at air release valve installation.
____	_____	____	If water main is outside of street right-of-way indicate 20 feet easement. Show all existing and proposed water line easements
____	_____	____	Indicate water main material Ductile Iron Pipe and class
____	_____	____	Indicate how new water will connect to existing water main.
____	_____	____	Indicate backflow prevention.
____	_____	____	Hydrant leads are off hydrant tees unless at the end of a water main.
____	_____	____	If road bore and jack is required show bore size (dia.), length, thickness of steel encasement and length of restrained pipe through encasement.

Section 3: Sanitary Sewer Collection Design

Applicant Validation N/A	Applicant Validation Included	COM Staff Check	
_____	_____	_____	All gravity sewer mains shall be designed and sized to serve the total natural drainage basin. The total off-site drainage area in acres must be shown on the plans and calculations should be submitted to the City upon request to justify pipe sizing. An 8-inch main shall be the minimum size permitted.
_____	_____	_____	When preparing the plans for sewer mains, deflection angles for all horizontal turns shall be shown on the drawings. All elevations shall be tied to mean sea datum and the benchmark shall be shown or described on the plans. Spot elevations on 100 foot stations, 75 feet from the centerline on both sides, shall be shown on the plan, or cross-sections supplied to ensure that the sewer can adequately serve the property. The plans shall show the manhole number (MH #1 etc.), top elevation, station, depth including invert elevations, length of sewer reach, and slope (in percent). Established creek centerlines and inverts will be platted on the sewer plan and profile sheets, adjacent to proposed sewer alignment, within 75 feet.
_____	_____	_____	Grades for sanitary sewers must be such that a minimum flow velocity of 2 feet per second is maintained. The minimum grade for an 8-inch sewer line is 0.50%. If necessary, for slope to be less than 0.50%, provide reason.
_____	_____	_____	Minimum widths of permanent and construction sanitary sewer easements, for public sewer mains, are: Permanent / Construction 8" & 15" main - 30 feet wide / 20 feet wide 18" & 24" main - 40 feet wide / 20 feet wide Larger size easements may be required based upon the depth of installation or other consideration as determined by the Staff. Sewer mains shall be centered in the easement. Indicate all existing and proposed easements.
_____	_____	_____	If less than 3 feet of cover over proposed sanitary sewer, pipe shall be ductile iron.
_____	_____	_____	Show sewer service terminating at a cleanout one foot beyond right-of-way. Do not tie 4" lateral sanitary service directly into manhole. Cleanouts shall not be placed in drives
_____	_____	_____	Indicate in profile vertical separation 24" sanitary sewer to storm drain and 24"sanitary sewer to water main.
_____	_____	_____	Sanitary sewer lines shall be located a minimum distance of 100 feet from the center of any well used as a community or private water supply. This buffer may be reduced to 50 feet provided that the sanitary sewer lines are constructed of materials and joints that are equivalent to water main standards.
_____	_____	_____	The maximum length of sewer line, which shall be constructed between manholes, shall be four hundred (420') feet.

Section 3: Sanitary Sewer Collection Design - cont

Applicant Validation N/A	Applicant Validation Included	COM Staff Check	
_____	_____	_____	The elevation of all sewer lines at creek crossings shall be set such that the top of the pipe is at or below the elevation of the stream bed or for crossings above water level, the bottom of the pipe should be located above the 25-year flood elevation.
_____	_____	_____	Sewer manholes located within the 100-year flood plain shall be constructed for watertight manholes, or sewer manholes located within the 100-year flood plain shall have a minimum height of two (2') feet above the 100-year flood elevation.
_____	_____	_____	Drop in manhole greater than 6" but less than or equal to 24" indicate concrete slide. If drop is greater than 24" provide an outside drop manhole.
_____	_____	_____	Public sanitary sewer pipe material shall be indicated in profile.
_____	_____	_____	Where it is not possible to provide gravity sanitary sewer service, indicate which lots will have a private pump system.
_____	_____	_____	Minimum Slope requirements:

Dia of Pipe (inches)	Minimum Slope (Feet per 100 feet)
8	0.50
10	0.28
12	0.22
14	0.17
15	0.15
16	0.14
18	0.12
21	0.10
24	0.08
27	0.07
30	0.06
36	0.05

_____	_____	_____	If road bore and jack is required show bore size (dia.), length, thickness of steel encasement and length of restrained pipe through encasement.

Section 4: Roadway and Street Design

Applicant Validation N/A	Applicant Validation Included	COM Staff Check	
____	_____	_____	Street typical sections shall be on the cover sheet or the first sheet of plan and profiles and will include street and right-of-way width, sidewalk location, cross-slopes, and pavement design. Do not place aggregate under curb for City streets.
____	_____	_____	Pavement Cross Section meets or exceeds City Standards – 8” ABC, 1 1/4” of H (Binder) and 1" I-2 Bituminous Pavement. No ABC under curb and gutter.
____	_____	_____	Plan view shall show all property lines and lot frontages. Existing property irons shall be labeled “E.I.P.” Right-of-way lines shall be dimensioned and labeled “R/W.”
____	_____	_____	Complete street curve data shall be shown on plans. This information shall include, but is not limited to: intersection radii, length of all arcs, internal angles, sight triangles, intersection centerlines, superelevation rates, if any along with the top of curb or edge of pavement profiles, vertical curve length, rate of vertical curvature (K), PVI, PVC, and PVT station and elevation, horizontal curve length, tangent, centerline radius, and delta.
____	_____	_____	RCP within the right of way with less than 3’ of cover shall be class IV RCP

OTHER:

1. Comply with the Mebane Storm Sewer Design Manual and the Mebane Flood Damage Prevention Ordinance.

2. Water Supply Watershed requirements may apply.

3. State Stormwater rules may apply.

4. The Department of Transportation may have additional requirements.

5. This document shall be submitted with all plan submittals, including after any plan revisions. All resubmittals of plans shall include a certification from the engineer that all revisions have been made per review comments (unless otherwise noted) and that any other revisions not required per the review comments have been noted on the plans and in the certification.

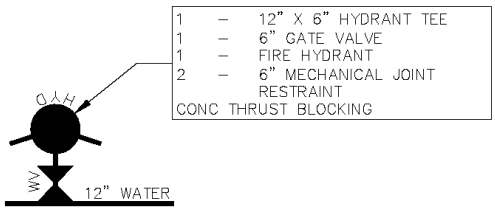

Water Main Fitting Box

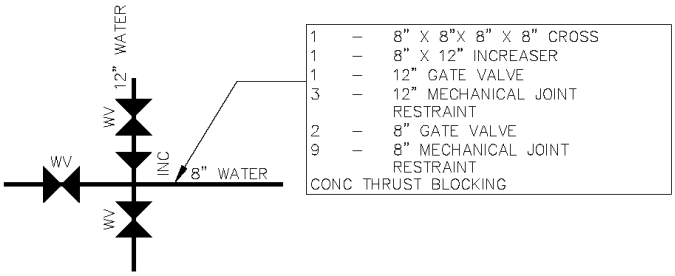

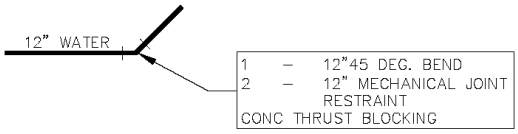

End of Water Line with Future Connection

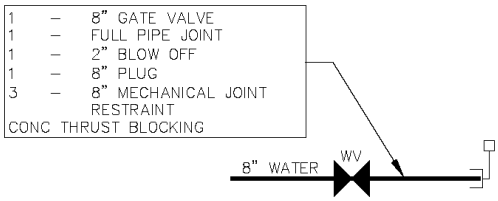

Typical Service Layout

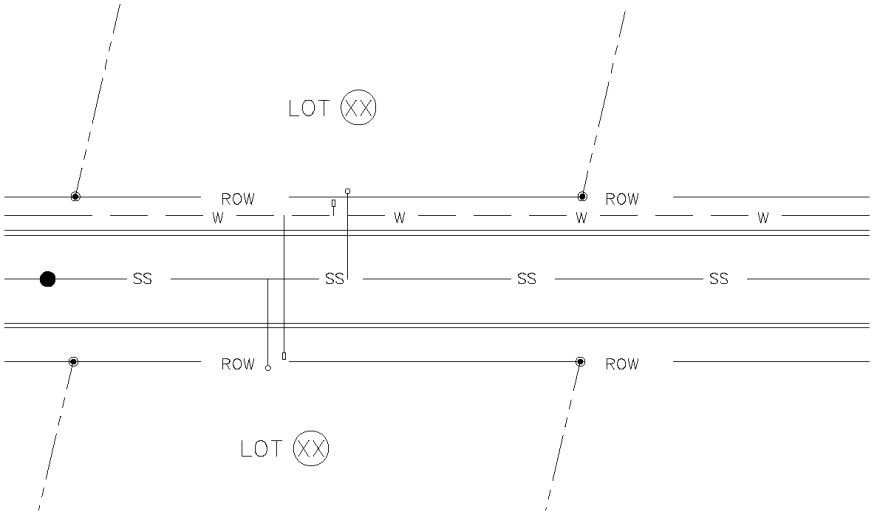

DIVISION 3. - CROSS-CONNECTION CONTROL

Sec. 36.76 - Purpose and Objective

(a) The purpose of this cross-connection ordinance is to establish and define the authority of the City of Mebane as the water purveyor in the elimination of all cross-connections within its public potable water supply.

(b) The objective of this cross-connection ordinance is to protect the public potable water supply of City of Mebane against actual or potential contamination by containing and/or isolating within the consumer's water system contaminants or pollutants which could, under adverse conditions, backflow through uncontrolled cross-connections into the public water system.

(c) This ordinance shall apply to all consumers connected to the city's public potable water supply.

(d) The City of Mebane will administer a continuing inspection and testing program of cross-connection control and backflow prevention which will systematically and effectively control all actual or potential cross-connections which may occur in the future.

(e) This ordinance is consistent with the Federal Safe Drinking Water Act (PL 93-523), the North Carolina State Administrative Code (15A NCAC 18A and 15A NCAC 18C), and the North Carolina State Building Code (Volume II) as they pertain to cross-connections with the public water supply.

Sec. 36.77- Responsibilities

(a) *Health agency.* The North Carolina Department of Environmental Quality (NCDEQ) has the responsibility for promulgating and enforcing laws, rules, regulations, and policies in carrying out an effective cross-connection control program. The North Carolina Division of Water Resources has the primary responsibility of ensuring that the water purveyor operates the public potable water system free of actual or potential sanitary hazards, including unprotected cross-connections, ensuring that the water purveyor provides an approved water supply at the service connection to the consumer's water system and, further, that the consumer or user requires the installation, testing, and maintenance of an approved backflow prevention assembly on the service connection when required.

(b) *Water purveyor.*

1) Except as otherwise provided in this ordinance, the water purveyor's responsibility to ensure a safe water supply begins at the source and includes all of the public water distribution system, including the service connection, and ends at the point of delivery to the consumer's water system.

2) In addition, the water purveyor shall exercise reasonable vigilance to ensure that the consumer has taken the proper steps to protect the public potable water system. To ensure that the proper precautions are taken, the water purveyor is required to administer a cross-connection program

   a) To determine the degree of hazard or potential hazard to the public potable water system and;

   b) To determine the degree of protection required; and

   c) To ensure proper containment and isolation protection through an on-going inspection program.

3) When it is determined that a backflow prevention assembly is required for the protection of the public system, the water purveyor shall require the consumer, at the consumer's expense, to install an approved backflow prevention assembly at each service connection, to test immediately upon installation and thereafter at annually, to properly repair and maintain such assembly or assemblies, to keep adequate records of each test and subsequent maintenance

and repair, including materials and/or replacement parts, and to submit such records to the water purveyor within the prescribed time period.

(c) *Inspection.*

1) The City of Mebane's Engineering, Inspections, and Utilities departments have the responsibility to not only review construction drawings and inspect plumbing as it is installed; but they have the explicit responsibility of preventing cross-connections from being designed and built into the plumbing system within its jurisdiction. Where the review of construction drawings suggests or detects the potential for cross-connections being made an integral part of the plumbing system, the City has the responsibility, under the state building code, for requiring that such cross-connections be either eliminated or provided with backflow prevention equipment approved by the state building code and the city's ordinance.

2) The inspector's responsibility begins at the point of delivery, downstream of the first installed backflow prevention assembly, and continues throughout the entire length of the consumer's water system. The plan inspector should inquire about the intended use of water at any point where it is suspected that a cross-connection might be made or where one is actually called for by the plans. When such is discovered it shall be mandatory that a suitable, approved backflow prevention assembly approved by the state building code and be required by the plans and be properly installed. The primary protection assembly for containment and isolation purposes only shall have approval from water purveyor, and the state building code, and shall also adhere to the administrative codes of the North Carolina Department of Environmental Quality.

(d) *Consumer.*

1) The consumer has the responsibility of preventing pollutants and contaminants from entering components of the user's potable water system or the public potable water system. The consumer's responsibility starts at the point of delivery from the public potable water system and includes all components of the consumer's water system.

2) The consumer, at his own expense, shall ensure installation, operation, testing, and maintenance of approved backflow prevention assemblies as directed by the water purveyor. All tests, maintenance, and repairs of backflow prevention assemblies shall be made by a state certified backflow prevention assembly tester. Following any installation, repair, overhaul, re-piping or relocation of an assembly, the consumer shall have it tested to ensure that it is in good operating condition and will prevent backflow.

3) The consumer shall maintain accurate records of tests and repairs made to backflow prevention assemblies and shall maintain such records for a minimum period of three (3) years. The records shall be on forms approved by the water purveyor and shall include the list of materials or replacement parts used.

4) The consumer has the responsibility of ensuring that all records of installation, testing and maintenance shall be provided to the water purveyor by the certified backflow prevention assembly tester within the prescribed time period.

(e) *Installer.* Installation of an approved backflow prevention assembly shall be made by the appropriate certified installer. When installing a backflow prevention device, the installer must document the installation on forms approved by the water purveyor. A copy of all installation forms shall be provided to the consumer and to the water purveyor.

(f) *Certified backflow prevention assembly testers.*

1) All certified backflow prevention assembly testers must hold a current certification from an approved backflow prevention assembly certification program. All certified backflow prevention assembly testers must become re-certified every two (2) years through an approved backflow prevention assembly certification program.

2) When employed by the consumer to test, repair, overhaul, or maintain backflow prevention assemblies, a backflow prevention assembly tester will have the responsibility for making competent inspections and for repairing or overhauling backflow prevention assemblies and

making reports of such repair to the consumer and responsible authorities on forms approved by the water purveyor. The tester shall include the list of materials or replacement parts used. It will be the tester's responsibility to ensure that original manufactured parts are used in the repair of or replacement of parts in a backflow prevention assembly. It will be the tester's further responsibility not to change the design, material or operational characteristics of an assembly during repair or maintenance without prior approval of the water purveyor.

3) The tester shall be equipped with and be competent to use all the necessary tools, gauges, manometers and other equipment necessary to properly test, repair, and maintain backflow prevention assemblies. All certified backflow prevention assembly testers must obtain and employ backflow prevention assembly test equipment which has been evaluated and/or approved by the water purveyor. All test equipment shall be checked for accuracy annually, at a minimum, and calibrated, if necessary. All certified backflow prevention assembly testers shall provide a certificate of accuracy to the water purveyor as to such calibration, employing an accuracy/calibration method acceptable to the water purveyor.

4) A certified tester shall perform the work and be responsible for the competency and accuracy of all tests and reports. A certified tester shall provide a copy of all test and repair reports to the consumer and to the water purveyor within ten (10) business days of any completed test or repair work. A certified tester shall maintain such records for a minimum period of three (3) years.

Sec. 36.78 - Definitions

The following words, terms and phrases, when used in this ordinance, shall have the meanings ascribed to them in this section, except where the context clearly indicates a different meaning:

Air-gap separation means a physical separation between the free-flowing discharge end of a potable water supply pipeline and an open or non-pressure receiving vessel. An approved air-gap separation shall be at least double the diameter of the supply pipe measured vertically above the overflow rim of the receiving vessel, in no case less than one (1) inch (or 2.54 cm).

Backflow means the undesirable reversal of flow of water or mixtures of water and other liquids, gases, or other substances into the distribution pipes of the consumer or public potable water system from any source or sources.

Backflow prevention assembly—Approved. The term "approved backflow prevention assembly" means an assembly used for containment and/or isolation purposes that has been investigated and approved by the water purveyor and has been shown to meet the design and performance standards of the American Society of Sanitary Engineers (ASSE), or the University of Southern California Foundation for Cross-Connection Control and Hydraulic Research (USCFCCCHR). A backflow prevention assembly used on fire suppression systems must comply with the National Fire Protection Association (NFPA) Code.

Backflow prevention assembly—Unapproved. The term "unapproved backflow prevention assembly" means an assembly that has been investigated by the water purveyor and has been determined to be unacceptable for installation within the water system. Consideration for disapproval shall be based upon, but not limited to, the following criteria: (i) Due to poor performance standards (i.e., significant failure rate); (ii) Lack of or unavailability of repair parts; and/or (iii) Poor service or response from assembly's factory representative.

Backflow prevention assembly—Type. The term means an assembly used to prevent backflow into a consumer or public potable water system. The types are:

(1) Double check valve assembly (DCVA)

(2) Double check detector assembly (fire sprinkler system) (DCDA and DCDA-II)

(3) Pressure vacuum breaker (PVB)

(4) Reduced pressure principle assembly (RP)

(5) Reduced pressure principle detector assembly (fire sprinkler system) (RPDA and RPDA-II)

(6) Spill-resistant vacuum breaker (SVB)

Backflow prevention assembly tester—Certified. The term "certified backflow prevention assembly tester" means a person who has proven his competency to the satisfaction of the water purveyor. Each person who is certified to make competent tests, or to repair, overhaul, and make reports on backflow prevention assemblies shall be knowledgeable of applicable laws, rules, and regulations, and must hold a certificate of completion from an approved training program in the testing and repair of backflow prevention assemblies. In order to prevent any conflict of interest, it shall be unlawful for an employee of the City of Mebane to test and repair any privately owned backflow prevention assemblies installed in the city's public potable water supply, except to perform any duty imposed by this ordinance.

Backflow prevention device—Approved. The term "approved backflow prevention device" means a device used for isolation purposes that has been shown to meet the design and performance standards of the American Society of Sanitary Engineers (ASSE) the American Water Works Association (AWWA).

Backpressure backflow means any elevation in the consumer water system, by pump, elevation of piping, or steam and/or air pressure, above the supply pressure at the point of delivery which would cause, or tend to cause, a reversal of the normal direction of flow.

Backsiphonage backflow means a reversal of the normal direction of flow in the pipeline due to a negative pressure (vacuum) being created in the supply line with the backflow source subject to atmospheric pressure.

Check valve—Approved. The term "approved check valve" means a check valve that is drip tight in the normal direction of flow when the inlet pressure is at least one (1) psi and the outlet pressure is zero (0). The check valve shall permit no leakage in a direction reverse to the normal flow. The closure element (e.g. clapper, poppet, or other design) shall be internally loaded to promote rapid and positive closure. An approved check valve is only one (1) component of an approved backflow prevention assembly, i.e., pressure vacuum breaker, double check valve assembly, double check detector assembly, reduced pressure principle assembly, or reduced pressure detector assembly.

Consumer means any person, firm, or corporation using or receiving water from the City of Mebane.

Consumer's potable water system means that portion of the privately owned potable water system lying between the point of delivery and point of use and/or isolation protection. This system will include all pipes, conduits, tanks, receptacles, fixtures, equipment, and appurtenances used to produce, convey, store, or use potable water.

Consumer's water system means any water system commencing at the point of delivery and continuing throughout the consumer's plumbing system, located on the consumer's premises, whether supplied by a public potable water or an auxiliary water supply. The system or systems may be either a potable water system or an industrial piping system.

Containment means preventing the impairment of the public potable water supply by installing an approved backflow prevention assembly at the service connection.

Contamination means an impairment of the quality of the water which creates a potential or actual hazard to the public health through the introduction of hazardous or toxic substances or through the spread of disease by sewage, industrial fluids, or waste.

Cross-connection means any actual or potential connection or structural arrangement between a public or a consumer's water system and any other source or system through which it is possible to introduce any contamination or pollution, other than the intended potable water with which the system is supplied. Bypass arrangements, jumper connections, removable sections, swivel or change-over devices, and other temporary or permanent devices through which or because of which "backflow" can or may occur are considered to be cross-connections.

Direct cross-connection means any arrangement of pipes, fixtures, or devices connecting a potable water supply to a non-potable source which is permanent in nature, ie a boiler feed line.

Double check detector assembly means a specially designed assembly composed of a line-size approved double check valve assembly with a specific bypass water meter and a meter-sized approved double check valve assembly. For a DCDA-II assembly, the bypass will be protected by a single check. To be approved, the DCDA must conform to ASSE 1048 standards. The meter shall register (in U.S. gallons/cubic feet) accurately for only very low rates of flow and shall show a registration for all rates of flow. This assembly shall only be used to protect against a nonhealth hazard (i.e., pollutant).

Double check valve assembly means an assembly composed of two (2) independently acting, approved check valves, including tightly closing shutoff valves attached at each end of the assembly and fitted with properly located test cocks. To be approved, the DCVA must conform to ASSE 1015 standards. This assembly shall only be used to protect against a non-health hazard (i.e., pollutant).

Dual check means a self-closing device designed to permit flow in one direction and close if there is a reversal of flow. A dual check valve is not an in-line testable assembly.

Fire sprinkler system means a system of piping which may include sprinklers, hose connections, hydrants, or fixed spray nozzles that may be wet or dry, open or closed for the use of suppressing fires.

Hazard—Degree of. The term "degree of hazard" is derived from the evaluation of conditions within a system which can be classified as either a "pollution" (non-health) or a "contamination" (health) hazard.

Hazard—Health. The term "health hazard" means an actual or potential threat of contamination of a physical, hazardous or toxic nature to the public or consumer's potable water system to such a degree or intensity that there would be a danger to health.

Hazard—Non-health. The term "non-health hazard" means an actual or potential threat to the quality of the public or the consumer's potable water system. A non-health hazard is one that, if introduced into the public water supply system, could be a nuisance to water customers, but would not adversely affect human health.

Health agency means the North Carolina Department of Environmental Quality and the North Carolina Department of Health and Human Services.

Indirect cross-connection means any arrangement of pipes, fixtures, or devices connecting a potable water supply to a non-potable source which is temporary in nature, ie a garden hose.

Industrial fluids means any fluid or solution which may be chemically, biologically, or otherwise contaminated or polluted in a form or concentration such as would constitute a health or non-health hazard if introduced into a public or consumer potable water system. Such fluids may include, but are not limited to: Process waters; chemicals in fluid form; acids and alkalis; oils, gases; etc.

Industrial piping system—Consumer's. The term "consumer's industrial piping system" means any system used by the consumer for transmission of or to confine or store any fluid, solid or gaseous substance other than an approved water supply. Such a system would include all pipes, conduits, tanks, receptacles, fixtures, equipment, and appurtenances used to produce, convey, or store substances which are or may be polluted or contaminated.

Isolation means the act of confining a localized hazard within a consumer's water system by installing approved backflow prevention assemblies. Disclaimer: The city may make recommendations, upon facility inspection, as to the usages of isolation devices/assemblies, but does not assume or have responsibility whatsoever for such installations.

Point of delivery means generally at the property line of the customer, adjacent to the public street where the city mains are located, or at a point on the customer's property where the meter is located. The customer shall be responsible for all water piping and control devices located on the customer's side of the point of delivery.

Pollution means an impairment of the quality of the water to a degree which does not create an actual hazard to the public health, but which does adversely and unreasonably affect the aesthetic qualities of such waters for domestic use.

Potable water means water from any source which has been investigated by the North Carolina Department of Environmental Quality and which has been approved for human consumption.

Public potable water system means any publicly or privately-owned water system operated as a public utility, under a current North Carolina Department of Environmental Quality permit, to supply water for public consumption or use. This system will include all sources, facilities, and appurtenances between the source and the point of delivery such as valves, pumps, pipes, conduits, tanks, receptacles, fixtures, equipment, and appurtenances used to produce, convey, treat, or store potable water for public consumption or use.

Reduced pressure principle backflow prevention assembly means an assembly containing within its structure a minimum of two (2) independently acting, approved check valves, together with a hydraulically operating, mechanically independent, pressure differential relief valve located between the check valves and at the same time below the first check valve. The first check valve reduces the supply pressure a predetermined amount so that during normal flow and at cessation of normal flow, the pressure between the checks is less than the supply pressure. In case of leakage of either check valve, the pressure differential relief valve, by discharge to atmosphere, shall operate to maintain the pressure between the checks less than the supply pressure. The unit shall include tightly closing shutoff valves located at each end of the assembly and each assembly shall be fitted with properly located test cocks. To be approved, the RP must conform to ASSE 1013 standards. The assembly is designed to protect against a health hazard (i.e., contaminant).

Reduced pressure principle detector assembly means a specially designed assembly composed of a line-size approved reduced pressure principle backflow prevention assembly with a specific bypass water meter and a meter-sized approved reduced pressure principle backflow prevention assembly. For a RPDA-II assembly, the bypass will be protected by a single check The meter shall register, in U.S. gallons/cubit feet, accurately for only very low rates of flow and shall show a registration for all rates of flow. To be approved, the RPDA must conform to ASSE 1047 standards. This assembly shall be used to protect against a health hazard (i.e., contaminant).

Service connections means the terminal end of a service connection from the public potable water system, i.e., where the city loses jurisdiction and sanitary control over the water at its point of delivery to the consumer's water system.

Vacuum breaker—Atmospheric type. The term "atmospheric vacuum breaker," also known as the "non-pressure type vacuum breaker," means a device containing a float-check, a check seat, and an air inlet port. The flow of water into the body causes the float to close the air inlet port. When the flow of water stops, the float falls and forms a check valve against back-siphonage and at the same time opens the air inlet port to allow air to enter and satisfy the vacuum. A shutoff valve immediately upstream may be an integral part of the device. An atmospheric vacuum breaker is designed to protect against a non-health hazard, isolation protection only, under a backsiphonage condition only. The device must conform to ASSE 1001 standards.

Vacuum breaker—Pressure type. The term "pressure vacuum breaker" means an assembly containing an independently operating internally loaded check valve and an independently operating loaded air inlet valve located on the discharge side of the check valve. The assembly is to be equipped with properly located test cocks and tightly closing shutoff valves attached at each end of the assembly. To be approved, the PVB must conform to ASSE 1020 standards. This assembly is designed to protect against a health hazard (i.e., contaminant) under a backsiphonage condition only.

Vacuum breaker—Spill-resistant type. The term "spill-resistant vacuum breaker" means an assembly containing one check valve force-loaded closed and an air inlet vent valve force-loaded open to atmosphere, positioned downstream of the check valve, and located between and including two tightly closing shutoff valves and test cocks. The components of this assembly are not designed to act independently of one another. To be approved, the SVB must conform to ASSE 1056 standards. This assembly is designed to protect against a health hazard (i.e., contaminant) under a backsiphonage condition only.

Water purveyor means the owner or operator of a public potable water system, providing an approved water supply to the public.

Water supply—Approved. The term "approved water supply" means any public potable water supply which has been investigated and approved by the North Carolina Department of Environmental Quality.

The system must be operating under a valid North Carolina permit. In determining what constitutes an approved water supply, the North Carolina Department of Environmental Quality has reserved the final judgment as to its safety and potability.

Water supply—Auxiliary. The term "auxiliary water supply" means any water supply on or available to the premises other than the purveyor's approved public potable water supply. These auxiliary waters may include water from another purveyor's public potable water supply or any natural source such as a well, spring, river, stream, etc., "used water", or industrial fluids. These waters may be polluted, contaminated, or objectionable and constitute an unacceptable water source over which the water purveyor does not have sanitary control.

Water supply—Unapproved. The term "unapproved water supply" means a water supply which has not been approved for human consumption by the North Carolina Department of Environmental Quality.

Water—Used. The term "used water" means any water supplied by a water purveyor from a public water system to a consumer's water system after it has passed through the point of delivery and is no longer under the control of the water purveyor.

This ordinance is gender neutral and the masculine gender shall include the feminine and vice versa. Shall is mandatory, may is permissive and discretionary. The use of the singular shall be construed to include the plural and the plural shall include the singular as indicated by the context of its use.

Sec. 36-79 - Right of entry

(a) Authorized representatives from the City of Mebane shall have the right to enter, upon presentation of proper credentials and identification, any building, structure, or premises during normal business hours, or at any time during the event of an emergency, to perform any duty imposed by this ordinance. Those duties may include sampling and testing of water, or inspections and observations of all piping systems connected to the public water supply. Where a user has security measures in force which would require proper identification and clearance before entry into their premises, the user shall make necessary arrangements with the security guards so that upon presentation of suitable identification, city personnel will be permitted to enter, without delay, for the purposes of performing their specific responsibilities. Refusal to allow entry for these purposes may result in discontinuance of water service.

(b) On request, the consumer shall furnish to the water purveyor any pertinent information regarding the water supply system on such property where cross-connections and backflow are deemed possible.

Sec. 36-80 - Elimination of cross-connections and degree of hazard

(a) When cross-connections are found to exist, the owner, his agent, occupant, user, or tenant will be notified in writing by the City or its representative to disconnect the cross-connection within the time limit established by the water purveyor. Degree of protection required and maximum time allowed for compliance will be based upon the potential degree of hazard to the public water supply system. Failure to comply with the disconnection and/or time limit requirements may result in suspension of water service. Requirements and maximum time limits are as follows:

    (1) Cross-connections with private wells or other auxiliary water supplies must immediately disconnect upon discovery.

    (2) All industrial and commercial facilities and/or facilities which pose a health hazard to the potable water system must have a containment assembly in the form of a reduced pressure principle backflow prevention assembly within sixty (60) days of written notification.

    (3) All other facilities not identified as a health hazard shall be considered non-health hazard facilities. Non-health hazard facilities must install a containment assembly in the form of a double check valve assembly within sixty (60) days of written notification.

(4) If, in the judgment of the water purveyor, an imminent health hazard exists, water service to the building or premises where a cross-connection exists may be terminated unless an air gap is immediately provided, or the cross-connection is immediately eliminated.

(5) Water mains served by the water purveyor but not maintained by the water purveyor should be considered cross-connections, with degree of hazard to be determined by the water purveyor. Degree of protection shall be based upon the degree of hazard, as determined by the water purveyor.

(6) In the event that the cross-connection control inspector does not have sufficient access to every portion of a private water system (e.g., classified research and development facilities; federal government property) to allow a complete evaluation of the degree of hazard associated with such private water systems, an approved reduced pressure principle assembly shall be required as a minimum of protection.

(b) No person shall fill special use tanks or tankers containing pesticides, fertilizers, other toxic chemicals or their residues from the public water system except at a location equipped with an air gap or an approved reduced pressure principle backflow prevention assembly properly installed on the public water supply.

Sec. 36-81 - Installation of assemblies

(a) No person shall commence or proceed with the installation of new backflow assemblies, the relocation of existing backflow assemblies or the replacement of existing backflow assemblies without first applying for and receiving from the Authority a permit authorizing such work. Each application shall be filed in writing on a form furnished for that purpose and shall contain such information as necessary to ensure that the work complies with all applicable State laws and the Authority ordinances.

(b) All backflow prevention assemblies shall be installed in accordance with the specifications furnished by the water purveyor, the manufacturer's installation instructions, and/or the latest edition of the state building code, whichever is most restrictive.

(c) All new construction plans and specifications, when required by the state building code and the North Carolina Department of Environmental Quality, shall be made available to the water purveyor for review and approval, and to determine the degree of hazard.

(d) Ownership, installation, testing, and maintenance of the assembly shall be the responsibility of the consumer, however installations, testing and maintenance work must be conducted by licensed and/or certified individuals as listed in this ordinance.

(e) If it has been determined that a consumer must install a backflow prevention assembly, the Utilities Department will provide the consumer with a letter of notification and required action. The following time periods shall be set forth for the installation of specified assemblies:

Health Hazard – 60 days

Non-health Hazard – 90 days

(f) Reduced pressure principle assemblies and reduced pressure principle detection assemblies must be installed in a horizontal position and in a location in which no portion of the assembly can become submerged in any substance under any circumstances. Pit and/or below grade installations are prohibited.

(g) The installation of a backflow prevention assembly which is not approved must be replaced with an approved backflow prevention assembly.

(h) The installer is responsible for ensuring a backflow prevention assembly is working properly upon installation and is required to furnish the following information to the City's Utilities Department within fifteen (15) days after an assembly is installed:

(1) Service address where assembly is located

(2) Owner and address, if different from service address

(3) Description of assembly's location

(4) Date of installation

(5) Installer, include name, plumbing company represented, plumber's license number, and project permit number

(6) Type of assembly, size of assembly

(7) Manufacturer, model number, serial number

(8) Test results/report

(i) When it is not possible to interrupt water service, provisions shall be made for a parallel installation of backflow prevention assemblies. The water purveyor will not accept an unprotected bypass around a backflow preventer when the assembly is in need of testing, repair, or replacement.

(j) Following installation, all reduced pressure principle backflow preventers (RP), double check valve assemblies (DCVA), pressure vacuum breakers (PVB), spill-resistant vacuum breakers (SVB), double check detector assemblies (DCDA), or reduced pressure principle detector assemblies (RPDA) are required to be tested by a certified backflow prevention assembly tester within ten (10) days.

(k) Enclosures for backflow prevention assemblies shall meet the following requirements:

(1) Shall be constructed of aluminum or fiberglass reinforced construction sized to totally enclose "wet" portion of backflow prevention assembly.

(2) Shall provide access through lockable doors or hinged lid for testing of back flow prevention assembly.

(3) Shall be totally removable for maintenance of backflow prevention assembly.

(4) Shall be lined with unicellular, non-wicking, insulation.

(5) Shall provide a thermostatically controlled heat source within the enclosure to provide freeze protection to minus thirty (30) degrees F.

(6) For enclosure of reduced pressure backflow prevention assemblies, a drain opening at each end shall be provided to accommodate full port discharge form device. Openings shall be protected against intrusion of wind, debris, and animals.

(7) Shall provide means of permanent anchor to concrete pad.

Sec. 36-82 - Testing and repair of assemblies

(a) Testing of backflow prevention assemblies shall be made by a certified backflow prevention assembly tester at the consumer’s expense. Such tests are to be conducted upon installation and annually thereafter or at a frequency established by the water purveyor. A record of all testing and repairs is to be retained by the consumer. Copies of the records must be provided to the City's Utilities Department within ten (10) business days after the completion of any testing and/or repair work.

(b) A certified backflow prevention assembly tester is allowed to test any backflow in our water service area.

(c) When repairs to backflow prevention assemblies are deemed necessary, whether through annual or required testing or routine inspection by the owner or by the water purveyor, these repairs must be completed within fourteen (14) days.

(d) All backflow prevention assemblies with test cocks are required to be tested annually or at frequency established by the water purveyor's regulations. For facilities that require an uninterrupted supply of water, and when it is not possible to provide water service from two (2) separate meters, provisions shall be made for a parallel installation of backflow prevention assemblies.

(e) All certified backflow prevention assembly testers must obtain and employ backflow prevention assembly test equipment which has been evaluated and/or approved by the water purveyor. All test equipment shall be documented on forms approved by the water purveyor. All test equipment shall be checked for accuracy annually, at a minimum, and calibrated, if necessary. All certified backflow prevention assembly testers shall provide a certificate of accuracy to the water purveyor as to such calibration, employing an accuracy/calibration method acceptable to the water purveyor.

(f) It shall be unlawful for any consumer or certified tester to submit any record to the city which is false or incomplete in any material respect. It shall be unlawful for any customer or certified tester to fail to submit to the water purveyor any record which is required by this ordinance. Such violations may result in any of the enforcement actions outlined in this ordinance.

Sec. 36-83 - Facilities requiring protection

(a) Approved backflow prevention assemblies shall be installed on the service line to any premises that the water purveyor has identified as having a potential for backflow.

(b) Premises having fire protection systems connected with the public water system shall be protected with an approved double check valve assembly as a minimum requirement. All fire systems using booster pumps, chemical agents, or additives to prevent freezing shall at a minimum be protected by an approved reduced pressure principle assembly.

(c) Water mains served by the Authority but not maintained by the Authority should be considered cross connections, with degree of hazard to be determined by the Director. Degree of protection shall be based on degree of hazard.

(d) For premises where, due to security requirements or other prohibitions (research and development), the Authority does not have access for a complete cross connection evaluation, an approved reduced pressure principle assembly shall be required as a minimum protection.

(e) Multiple-family, duplex, triplex, and quadraplex units which have shared plumbing shall have approved appropriate backflow protection. Shared plumbing shall mean one meter serving more than one dwelling unit.

(f) Any premises five stories or more shall have a reduced pressure principle assembly as minimum protection.

(g) Any premises which uses potable water for lawn irrigation purposes, or for chemically treated pools, whirlpools, spas, and other recreational fixtures shall install backflow prevention in accordance with the water purveyor specifications.

(h) No person, firm, or agency may connect to the Authority's fire hydrant system without approved backflow prevention. Agency refers to the Authority agencies as well as outside agencies

(i) No facility is exempted due the age of the facility.

(j) Other types of facilities or services not listed above or in appendix A [subsection (g)] may also be required to install approved backflow prevention assemblies if determined necessary by the water purveyor. The type of assembly required will be determined by the water purveyor and will be based on degree of hazard determined.

(k) All assemblies and installations shall be subject to inspection and approval by the water purveyor.

(l) Appendix A—Potential hazards. NOTE: This list is not intended to be an exhaustive list.

(1) Aircraft and missile plants

(2) Automotive services stations, dealerships, etc

(3) Automotive plants

(4) Auxiliary water systems:

   a. Approved public/private water supply

   b. Unapproved public/private water supply

   c. Used water and industrial fluids

(5) Bakeries

(6) Battery manufacturers

(7) Beauty shops/barber shops

(8) Beverage bottling plants

(9) Bottling plants

(10) Breweries

(11) Buildings—Hotels, apartment houses, public and private buildings, or other structures having unprotected cross-connections

(12) Canneries, packing houses, and rendering plants

(13) Car wash facilities

(14) Chemical plants—Manufacturing, processing, compounding or treatment

(15) Chemically contaminated water systems

(16) Commercial car-wash facilities

(17) Commercial greenhouses

(18) Commercial sales establishments (department stores, malls, etc.)

(19) Concrete/asphalt plants

(20) Connection to tanks, pumps, lines, steam boilers or vessels that handle sewage, lethal substances, toxic or radioactive substances

(21) Dairies and cold storage plants

(22) Dye works

(23) Film laboratories

(24) Fire sprinkler/suppression systems

(25) Hospitals, medical buildings, sanitariums, morgues, mortuaries, autopsy facilities, nursing and convalescent homes, medical clinics, and veterinary hospitals

(26) Industrial facilities

(27) Laundries

(28) Lawn care companies

(29) Lawn sprinkler/irrigation systems

(30) Metal plating, manufacturing, cleaning, processing, and fabricating plants

(31) Mobile home parks

(32) Oil and gas production, storage or transmission properties

(33) Paper and paper products plants

(34) Pest control (exterminating and fumigating)

(35) Plating plants

(36) Power plants

(37) Radioactive materials or substances plants or facilities handling

(38) Restaurants

(39) Restricted, classified, or other closed facilities

(40) Rubber plants (natural or synthetic)

(41) Sand and gravel plants

(42) Schools and colleges

(43) Sewage and storm drain facilities

(44) Swimming pools

(45) Wastewater treatment plants

(46) Waterfront facilities and industries

Sec. 36.84 - Fire Protection Systems

(a) All connections for fire protection with the public water system 2" and smaller shall be protected with an approved double check valve assembly as a minimum requirement. All fire systems using toxic additives or booster pumps shall be protected by an approved reduced pressure principle assembly at the main service connection.

(b) All connections for fire protection systems connected with the public water system greater than 2" shall be protected with an approved double-check detector assembly as minimum requirement. All fire protection systems using toxic or hazardous additives or booster pumps shall be protected by an approved reduced pressure principle detector assembly at the main service connection.

(c) All existing backflow prevention assemblies 2" and larger installed on fire protection systems that were initially approved by the water purveyor shall be allowed to remain on the premises, as long as they are being properly maintained, tested, and repaired as required by this Ordinance. However, if the existing assembly must be replaced (once it can no longer be repaired), or in the event of proven water theft through an un-metered source, the consumer shall be required to install an approved double-check detector assembly or reduced pressure principle detector assembly as required by this provision.

Sec. 36-85 - Connections with unapproved sources of supply

(a) No person shall connect or cause to be connected any supply of water not approved by the North Carolina Department of Environmental Quality to the water system supplied by the city. Any such connections allowed by the water purveyor must be in conformance with the backflow prevention requirements of this ordinance.

(b) In the event of contamination or pollution of a public or consumer potable water system, the consumer shall notify the water purveyor immediately in order that appropriate measures may be taken to overcome and eliminate the contamination or pollution.

Sec. 36-86 - Cross-connection prohibited

(a) No person shall connect or cause to be connected any supply of water not approved by the State of North Carolina to the water system supplied by the Authority, unless allowed by the Director. Any such connections allowed by the Director must be in conformance with title 15a, subchapter 18-C, subparagraph .0406, North Carolina Administrative Code, rules governing water supplies.

(b) In the event of a suspected contamination of a potable water system, the consumer shall notify the Authority immediately in order that appropriate measures may be taken to overcome and eliminate the contamination or pollution.

(c) Failure of the customer to cooperate in the installation, maintenance, testing or inspection of backflow prevention assemblies will be grounds for enforcement actions.

Sec. 36-87 - Enforcement

(a) The consumer or person in charge of any installation found not to be in compliance with the provisions of this ordinance shall be notified in writing with regard to the corrective action(s) to be taken.

(b) Such notice must explain the violation and give a time frame within which the violation must be corrected based upon the specifications of this ordinance.

(c) If the consumer or person in charge of any installation is found to be in violation of this ordinance and fails to correct the violation in a timely manner or to pay any civil penalty or expense assessed under this section, water service may be terminated, and shall be re-established when the violation is corrected and any applicable civil penalties are paid.

(d) Any offender who shall continue any violation beyond the time limit provided for in the aforementioned notification shall be subject to a civil penalty of up to one thousand dollars ($1,000.00) per violation. Each day in which a violation of any provision of this ordinance shall occur or continue shall constitute a separate and distinct offense. The maximum civil penalty shall not exceed ten thousand dollars ($10,000.00).

(e) Failure of consumer or certified tester to submit any record required by this ordinance, or the submission of falsified reports/records may result in a civil penalty of up to one thousand dollars ($1,000.00) per violation. If a certified backflow prevention assembly tester submits falsified records to the city, the city shall take the necessary actions to revoke certification to test backflow prevention assemblies within the potable water system for a time period not to exceed one (1) year. The tester will then be required to complete an approved certification course to acquire a new certification. Falsification made to records/reports after becoming recertified shall result in the permanent revocation of backflow testing certification, in addition to a civil penalty as provided for in this subsection.

(f) Failure of consumer to cause testing or maintenance required by this ordinance may result in a civil penalty of up to two hundred dollars ($200) per day but limited to a maximum penalty of three thousand dollars ($3000).

(g) Requests for extension of time shall be made in writing to the Utilities Director of the City or his authorized representative.

(h) Enforcement of this program shall be administered by the Utilities Director of the City or his authorized representative.

Sec. 36-88 – Limitations of Liability

(a) The City shall not be held liable, for any cause, for failure to detect any containment assembly failing to operate adequately, or failure to identify any specific hazard, which may result in contamination of its public water supply, nor shall this article diminish the

responsibility of any owner from whose property a containment of the public water supply may originate.

WATER SHORTAGE RESPONSE PLAN

A plan authorizing the declaration of water shortage; establishing procedures and measures for the essential conservation of water resources; and prescribing certain penalties.

Be It Enacted by the Governing Body of the City of Mebane, N.C. as follows:

Chapter 36 – Utilities

Article II – Water System
Division 2 – Water Shortage Response Plan

Section 36-61

Purpose

The purpose of this plan is to provide for the declaration of official phases of water supply shortage situations and the implementation of voluntary and mandatory water conservation measures throughout the Mebane Service Area in the event a shortage is declared.

This plan shall supersede previous water shortage response plans and repeals Division 2 of Chapter 6 Sections 36-61 – 36.75 in the Mebane Municipal Code of Ordinances in its entirety and adopting in lieu of the following:

Section 36-62.

Definitions

a. "Allotment," as the term is used in this ordinance, shall mean the maximum quantity of water allowed for each customer over any applicable period as established in the water rationing provisions of this ordinance.

b. "Any Water," as the term is used in this ordinance, shall mean any type of water, including fresh water, brackish water, wastewater, or reclaimed water.

c. "Customer," as the term is used in this ordinance, shall mean any person using water for any purpose from the City's water distribution system and for which either a regular charge is made or, in this case of bulk sales, a cash charge is made at the site of delivery.

d. "Emergency," as the term is used in this ordinance, shall mean that water supplies are below the level necessary, to meet normal needs and that serious shortages exist in the area.

e. "Excess Use," as the term is used in this ordinance, shall mean the usage of water by a water customer in excess of the water allotment provided under the water rationing provisions of this ordinance for that customer, over any applicable period.

f. "Fresh Water," as the term is used in this ordinance, shall mean water withdrawn from surface or groundwater, which has not been previously used, other than brackish water.

g. "Mandatory Conservation," as the term is used in this ordinance, shall mean that raw water supplies (i.e., streamflow, reservoir levels or groundwater levels) are consistently below seasonal averages, and if they continue to decline, may not be adequate to meet normal needs.

h. "Non-Residential Customer," as the term is used in this ordinance, shall mean commercial, industrial, institutional, public and all other such users, with the exception of hospitals and health care facilities.

i. "Rationing, as the term is used in this ordinance, shall mean procedures established to provide for the equitable distribution of critically-limited water supplies, in order to balance demand and limited available supplies, and to assure that sufficient water is available to preserve public health and safety.

j. "Residential Customer," as the term is used in this ordinance, shall mean any customers who receive water service for a single or multi-family dwelling unit. The term residential customer does not include educational or other institutions, hotels, motel, or similar commercial establishments.

k. “Service Area,” as the term is used in this ordinance, shall mean the area served by the City of Mebane water systems, including all connections to said system.

l. "Service Interruption," as the term is used in this ordinance, shall mean the temporary suspension of water supply, or reduction of pressure below that required for adequate supply, to any customer, portion of a water supply, or entire system.

m. “City” as used in this ordinance means the City of Mebane, N.C.

n. "Voluntary Conservation”, as the term is used in this ordinance, shall mean that conditions exist which indicate the potential for serious water supply shortages.

o. “Waste of water”, as the term is used in this ordinance, includes, but is not limited to (1) permitting water to escape down a gutter, ditch, or other surface drain, or (2) failure to repair a controllable leak of water due to defective plumbing.

p. “Wastewater” as the term is used in this ordinance, shall mean water which has been previously used for industrial, municipal, domestic, or other purpose, and has not been returned to the surface or groundwater source.

<u>Section 36-63.</u>
Water Use Classifications

Class 1: Essential Water Uses

A. Domestic Use:

- Water necessary to sustain human life and the lives of domestic pets, and to maintain minimum standards of hygiene and sanitation.

B. Health Care Facilities:

- Patient care and rehabilitation, including swimming pools used for patient care and rehabilitation.

C. Public Use:

- Fire Hydrants
    1. Firefighting
    2. Certain testing and drills by the fire department if performed in the interest of public safety and if approved by the City Manager.
- Flushing of Sewers and Hydrants: As needed to ensure public health and safety and if approved by the City Manager.

Class 2: Socially or Economically Important Uses of Water

A. All Domestic Uses Other Than Those Included in Classes 1 and 3:

- Home water use including kitchen, bathroom and laundry use
- Minimal watering of vegetable gardens
- Watering of trees where necessary to preserve them

B. Commercial, Agricultural, Industrial and Institutional Uses

- Outdoor commercial watering (public or private) using conservation measures and to the extent that sources of water other than fresh water are not available to use.
- Irrigation for commercial vegetable gardens and fruit orchards or the maintenance of livestock.

- Watering by commercial nurseries at a minimum level necessary to maintain stock.

- Water use by arboretums and public gardens of national, State, or regional significance where necessary to preserve specimens.

- Use of fresh water at a minimum rate necessary to implement vegetation following earth-moving, where such vegetation is required by law or regulation.

- Watering of golf course greens.

- Filling and Operation of Swimming Pools:

    - Residential pools which serve more than 25 dwelling units.
    - Pools used by health care facilities for patient care and rehabilitation
    - Municipal pools

- Commercial car and truck washes

- Commercial Laundromats

- Restaurants, clubs, and Eating Places

- Air Conditioning:
    - Refilling for start up at the beginning of the cooling season
    - Make-up of water during the cooling season
    - Refilling specifically approved by health officials and the municipal governing body, where the system has been drained for health protection or repair purposes.

- Schools, Churches, Motels/Hotels and Similar Commercial Establishments

Class 3: Non-Essential Uses of Water

A. Ornamental Purposes:

- Fountains, reflecting pools, and artificial waterfalls

B. Outdoor Non-Commercial Watering (public or private):

- Gardens, lawns, parks, golf courses (except greens), playing fields and other recreational areas.

- Filling and operation of recreational swimming pools which serve fewer than 25 dwellings

- Non-commercial washing of motor vehicles

- Serving water in restaurants, clubs, or eating places except by specific request.

- Air Conditioning: refilling cooling towers after draining except as specified in Class 1

C. Public Use:

- Fire Hydrants: any purpose, including use of sprinkler caps and testing fire apparatus and for fire department drills, except as listed in Class 1

- Flushing of Sewers and Hydrants except as listed in Class 1

Section 36-64.

Water Shortage Deemed in Light of Reserve Water Supply

A water shortage may be declared to exist when the usable water storage supply available through the facilities of the City shall have reached the point were the usable supply has been so reduced that the citizens cannot be supplied with water to protect their health and safety without substantially curtailing the water demand.

Section 36-65.

Declaration of Water Shortage

In the event of a water shortage in any of the five (5) stages of severity hereinafter set forth in the City water supply threatening the health and safety of the citizens of the City, the City Manager is authorized, empowered, and directed to issue a public declaration declaring to all persons the existence of such state and the severity thereof, and in order to more effectively protect the health and safety of the people within the service area, to place in effect the restrictive provisions hereinafter authorized.

A. Notification

The following notification methods will be used to inform water system employees and customers of a water shortage declaration: employee e-mail announcements, notices at municipal buildings, and on the City of Mebane website homepage. Required water shortage response measures will be communicated through the use of reverse 911, the local newspaper, and on the City of Mebane website.

B. Compliance Required in the Event of Water Shortage

In the event the City Manager issues any such declaration described in the section above, then and in that event it shall be unlawful for any person, firm, or corporation, to use or permit the use of water from the water system within the service area for any of the purposes hereinafter set forth until such time as this article be amended or repealed, or until the City Manager, by public proclamation, has declared certain provisions no longer in effect. In exercising this discretionary authority, consideration shall be given to: water levels of available sources of supply; available/usable storage on hand; draw-down rates; the projected supply capability; outlook for precipitation; daily water use patterns; and availability of water from other sources.

In light of the many benefits that can be derived by conserving water, all residents, businesses and institutions in the service area should follow water conservation practices, regardless of the time of year or whether or not a water shortage exists. Water conservation should be followed during all phases of construction related activities. Where appropriate, water needed should be obtained from supplemental sources and non-essential construction related activities which require water should be delayed until such time as the water emergency has ended.

Section 36-66.

Declaration of Restrictions

	Voluntary Conservation Stage I	**Mandatory Stage II**	**Mandatory Stage III**	**Emergency Stage IV**	**Rationing Stage V**
Class 1: Essential	Voluntary Conservation	Voluntary Conservation	Voluntary Conservation	Additional Conservation as possible	Mandatory Restrictions
Class 2: Socially or Economically Important	Voluntary Conservation	Voluntary Conservation/ Mandatory Restrictions	Voluntary Conservation/ Mandatory Restrictions	Mandatory Restrictions	Mandatory Restrictions
Class 3: Non-Essential	Voluntary Conservation	Mandatory Restrictions	Mandatory Restrictions	Mandatory Restrictions	Mandatory Restrictions

C.1 Declaration of Voluntary Conservation Stage I

A Stage 1 Condition may be declared when drought conditions appear to be imminent and Graham-Mebane Lake water level declines to a level of one hundred fifty (150) days of usable water storage.

C.1.1 *An extensive publicity campaign will be initiated using public media and specialized methods to inform the public of an impending water shortage.*

C.1.2 *Residential conservation measures will be encouraged and recommended including the following:*

a. Use shower for bathing rather than bathtub and limit shower to no more than four (4) minutes.

b. Limit flushing of toilets by multiple uses.

c. Do not leave faucets running while brushing teeth, shaving, or rinsing dishes.

d. Limit use of clothes washers and dishwashers and when used, operate fully loaded.

e. Limit lawn water to that which is necessary for plants to survive.

f. Water shrubbery the minimum required, reusing household water when possible.

g. Limit car washing to the minimum.

h. Do not wash down the outside areas such as sidewalks, patios, etc.

i. Install water flow restrictive devices in shower heads.

j. Use disposable and biodegradable dishes.

k. Install water saving devices such as water filled plastic bottle or commercial units in toilet tanks.

l. Limit hours of operation of water cooled air conditioners.

C.1.3 *It is recommended that water supply line pressure reducing valves be set to the minimum necessary for effective operations of fixtures and equipment.*

C.1.4 *Conservation in public buildings, institutions, dormitories, etc. is encouraged by reducing pressure at plumbing fixtures, by installation of restricting devices and shutting down on water flow control devices, and by periodic flushing of urinals.*

C.1.5 *All residents, businesses and institutions are requested to temporarily delay new landscape work until the water shortage has ended.*

C.2 Declaration of Mandatory Stage II

A Stage II Condition may be declared when drought conditions are prolonged and Graham-Mebane Lake water level declines to a level of one hundred twenty (120) days of usable water storage.

In addition to the restrictions heretofore imposed, the following moderate mandatory water restrictions shall be in effect. It shall be unlawful to use water from the public water system supplied by the city/town for the following purposes:

a. To water lawns, grass, shrubbery, trees, flower and vegetable gardens except on Saturday between the hours of 6:00 am and 9:00 am.

b. To fill newly constructed swimming and/or wading pools or refill swimming and/or wading pools, which have been drained. A minimal amount of water may be added to maintain continued operation of pools which are in operation at the time the provisions of a “Mandatory Stage II” are placed into effect.

c. To operate water-cooled air conditioners or other equipment that does not recycle cooling water, except when health and safety are adversely affected.

d. To wash automobiles, trucks, trailers, boats, airplanes, or any type of mobile equipment, including commercial washing, except those commercial operations that recycle at least 50% of their water use.

e. To wash down outside areas such as streets, driveways, service station aprons, parking lots, office buildings, exteriors of existing or newly constructed homes or apartments, sidewalks, or patios, or to use water for other similar purposes.

f. To operate or introduce water into any ornamental fountain pool or pond or other structure making similar use of water.

g. To serve drinking water in restaurants, cafeterias, or other food establishments, except upon request.

h. To use water from public or private fire hydrants for any purpose other than fire suppression or other public emergency, unless authorized by the City Manager for water quality needs.

i. To use water for dust control or compaction.

j. To use water for any unnecessary purpose or to intentionally waste water.

C.3 Declaration of Mandatory Stage III

A Stage III Condition may be declared when drought conditions are prolonged and Graham-Mebane Lake water level declines to a level of ninety (90) days of usable water storage.

a. To water or sprinkle any lawn.

b. To water any vegetable garden or ornamental shrubs except during the hours of 6:00 am to 9:00 am on Saturday. Such watering is only to be done by handheld hose or container or drip irrigation system.

C.4 Declaration of Emergency Stage IV

A Stage IV Condition may be declared when drought conditions are persistent and Graham-Mebane Lake water level declines to a level of sixty (60) days of usable water storage. In addition to the restrictions heretofore imposed, the following stringent mandatory water restrictions shall be in effect. It shall be unlawful:

a. To use water outside a structure for any use other than an emergency use involving fire.

b. To operate an evaporative air conditioning unit which recycles water except during the operating hours of the business.

c. To introduce water into any swimming pool.

C.4 Declaration of Rationing Stage V

A Stage V Condition may be declared when all the conditions exist in Stage IV and Graham-Mebane Lake water level declines to a level of thirty (30) days of usable water storage. In the event a “Rationing Stage V” is declared to exist, a system of water rationing shall be put in effect in addition to all previously imposed restrictions. In the event of water rationing in which water will be supplied in the minimal quantities required for the health, welfare, and safety of the citizens in accordance with the following program.

a. It shall be unlawful to fail to act in accordance therewith or use water in any manner or attempt to evade or avoid such water rationing restrictions.

b. Fire protection will be maintained, but where possible, tank trucks shall use raw water.

Section 36-67.

Variance

If the mandated further reduction in water usage cannot be obtained without imposing extraordinary hardship which threatens health and safety, the non-residential customer may apply to the municipality for a variance. For these purposes "extraordinary hardship" means a permanent damage to property or an economic loss which is substantially more severe than the sacrifices borne by other water users subject to this water rationing ordinance. If the further reduction would cause an extraordinary hardship or threaten health or safety, a variance may be granted by the City Manager and a revised water use reduction requirement for the particular customer may be established.

Applications for water use variance requests are available from the City of Mebane website and City Hall. All applications must be submitted to the City Hall for review by the City Manager or his or her designee. A decision to approve or deny individual variance requests will be determined within two weeks of submittal after careful consideration of the following criteria: impact on water demand, expected duration, alternative source options, social and economic importance, purpose (i.e. necessary use of drinking water) and the prevention of structural damage.

Any person aggrieved by a decision relating to such a variance may file a complaint with the City Manager in accordance with established procedures.

Section 36-68.

Enforcement

The provisions of the water shortage response plan will be enforced by City personnel and local law enforcement. Violators may be reported to the City’s phone line or at City Hall.

Section 36-69.

Penalties

The City may impose an excess user charge of $100.00 per event for violations of this chapter. The first such violation shall receive a warning citation and shall not be subject to the user fee set forth herein.

Section 36-70.

Public Comment

Customers will have multiple opportunities to comment on the provisions of the water shortage response plan. First, availability of the draft plan will be published in the local newspaper and will be available on the City of Mebane website. A public hearing will be scheduled with a notice printed in the local newspaper requesting comments on the draft plan. All subsequent revisions to the draft plan will be published at least 30 days prior to an adoption vote by Mebane's City Council.

Section 36-71.

Effectiveness

The effectiveness of the Mebane water shortage response plan will be determined by comparing the stated water conservation goals with observed water use reduction data. Other factors to be considered include frequency of plan activation, any problem periods without activation, total number of violation citations, desired reductions attained and evaluation of demand reductions compared to the previous year's seasonal data.

Section 36-72.

Effective Date

This plan shall take effect immediately upon adoption or passage by the City's governing body.

Section 36-73.

Effective Period

This plan will remain in effect until terminated by action of the City's governing body.

Section 36-74.

Revisions

The water shortage response plan will be reviewed and revised as needed to adapt to new circumstances affecting water supply and demand, following implementation of emergency restrictions, and at a minimum of every five years in conjunction with the updating of our Local Water Supply Plan. Further, City staff will review procedures following each emergency or rationing stage to recommend any necessary improvements to the plan to Mebane's City Council. The City of Mebane City Manager is responsible for initiating all subsequent revisions.

Section 36-75.

Cessation of Restrictions

Upon improvement in the water level in the Graham-Mebane Lake, the City Manager is authorized and empowered to issue public declarations indicating the cessation of previously declared stages of water restrictions. The notifications of such declarations shall be in accordance with Section 36-65.

Passed by the council (or commission) this day of _____ _____.

(Mayor's Signature)

ATTEST:

(Clerk's Signature)

Sec. 122-265. Enforcement.

(a) No customer shall use or allow the use of water in violation of the restrictions on outdoor water use contained in or promulgated pursuant to this division.

(b) The Cobb County Water System (CCWS) shall be the enforcement authority for this Division. The county manager may also authorize other county departments as may be deemed necessary to support enforcement. Upon a first violation of the outdoor water use restrictions pursuant to this division, a written notice will be posted by a CCWS or other authorized representative at the property where the violation occurred. Thereafter, notice of said violation shall be sent by first class mail to the customer of record. Such notice shall constitute the initial warning to the customer at such address, and no administrative penalty will be imposed. Upon a subsequent violation at the same customer's address that occurs after such warning, notice will be posted and mailed in the same manner as the initial warning, and the customer receiving CCWS service will be subject to administrative penalties for unauthorized use of water and/or unauthorized use of service pursuant to section 122-84(k) on a schedule approved by the board of commissioners.

(c) Exercise of this option shall not be a bar to, or be a prerequisite for, taking other criminal and alternative actions permitted under this division.

(d) Any administrative penalties imposed pursuant to this section may, at the discretion of the department director under extraordinary circumstances, be waived or reduced.

(e) Any administrative penalties imposed pursuant to this section shall be payable to the CCWS, shall commence on the date of issuance of any notice of noncompliance, and shall not be affected by the filing of any appeal. Any such administrative penalties shall become a part of the customer's regular bill for service. Failure to remit payment as required under section 122-81 will subject the customer to a termination of service.

(f) Any customer affected by an administrative penalty imposed pursuant to this section shall upon request be given a show cause hearing pursuant to section 122-44. Such request shall be in writing and delivered to the department director within 30 days of the posting of the violation for which the show cause hearing is requested.

(g) Criminal and alternative penalties. Any violation of this section may also be enforced by a citation or accusation returnable to the magistrate court of the county pursuant to section 1-10 of the County Code or by any other legal means as set forth in this article.

(Ord. of 7-27-04; Amd. of 2-23-16)

Sec. 122-267. Water waste ordinance for outdoor water use.

The water waste ordinance is to encourage the efficient use of outdoor water and the proper maintenance of irrigation and plumbing systems. "Water waste" is defined in this section to mean the unnecessary loss of water through improper application or failure of a plumbing or irrigation system resulting in excessive runoff. Any person in violation of the water waste ordinance shall be subject to an appropriate penalty outlined in section 122-265 for the outdoor water use restrictions. The following activities will be subject to a penalty:

(a) A broken irrigation system (missing heads, broken pipes, etc.).

(b) Excessive runoff—Water running down the driveway, street, or sidewalk.

(c) A hose running unattended without a shutoff nozzle.

(d) A visible and unrepaired leak in excess of one gallon per minute.

(Amd. of 2-23-16)

Georgia Department of Natural Resources

Environmental Protection Division • Watershed Protection Branch
2 Martin Luther King Jr. Drive, Suite 1152 East • Georgia 30334
Judson H. Turner, Director
(404) 656-4713

Implementation of the National Pretreatment Program

The goals of the National Pretreatment Program are to improve opportunities to recycle and reclaim wastewater and sludge, to prevent pass through of pollutants into receiving waters, and to prevent interference with the operation of the publically owned treatment works (POTWs) when hazardous or toxic industrial waters are discharged into the sewage system.

In Georgia, the primary responsibility for developing pretreatment programs and enforcing national pretreatment standards for industries rest with the State and with approved local POTW authorities. The U.S. Environmental Protection Agency participates in the pretreatment program by overseeing the development, implementation and continued effectiveness of local pretreatment programs.

The general pretreatment regulations at Chapter 391-3-6-.09 of the Georgia Rules and Regulations for Water Quality Control and 40 CFR Part 403.8(a) require certain Publically Owned Treatment Works to establish a local pretreatment program to control discharges from nondomestic sources. In these cases, the POTW is the control authority and implements its own program. This includes permitting, compliance and enforcement of these programs.

In instances in which the POTW does not have an approved pretreatment program, EPD is the control authority and is responsible for permitting, compliance and enforcement for the industrial users.

If an industry is uncertain if Chapter 391-3-6-.08 of the Rules and 40 CFR Part 403 requires the discharge to a POTW to be permitted, contact the appropriate control authority to find out.

Georgia Rules and Regulations for Water Quality Control

Pretreatment and Permit Requirements:

http://rules.sos.ga.gov/GAC/391-3-6-.08

Requirements for Approval and Implementation of Publicly Owned Treatment Works Pretreatment Programs and Administration of the EPD Pretreatment Program:

http://rules.sos.ga.gov/GAC/391-3-6-.09

EPA Pretreatment Resources

A complete list of EPA Pretreatment Publications can be found here:
https://cfpub.epa.gov/npdes/docs.cfm?view=allprog&program_id=3&sort=name

Laws and Regulations Related to Pretreatment:
http://www.epa.gov/npdes/national-pretreatment-program#laws

NPDES Introduction to the National Pretreatment Program:
http://www.epa.gov/npdes/npdes-introduction-national-pretreatment-program

Local Limits Development Guide:
https://www3.epa.gov/npdes/pubs/pretreatment_local_limits.pdf

Checklist – Pretreatment Program Legal Authority Reviews:
https://www3.epa.gov/npdes/pubs/pretreatment_legal_checklist.pdf

Guidance Manual on the Development and Implementation of Local Discharge Limitations Under the Pretreatment Program: https://www3.epa.gov/npdes/pubs/owm0275.pdf

Guidance for Reporting and Evaluating POTW Noncompliance with Pretreatment Implementation Requirements:
https://www3.epa.gov/npdes/pubs/1990_potw_noncompliance_guidance.pdf

Control of Slug Loadings to POTWs:
https://www3.epa.gov/npdes/pubs/owm021.pdf

Determining Industrial User Significant Noncompliance Summary:
https://www3.epa.gov/npdes/pubs/industrial_user.pdf

Application and Use of the Regulatory Definition of Signification Noncompliance for Industrial Users:
https://www3.epa.gov/npdes/pubs/application_use_regulatory.pdf

Industrial User Inspection and Sampling Manual for POTW's:
https://www3.epa.gov/npdes/pubs/owm0025.pdf

Guidance for Developing Control Authority Enforcement Response Plans:
https://www3.epa.gov/npdes/pubs/owm0015.pdf

APPENDIX F

RATE STRUCTURE EVALUATION EXAMPLES

Baldwin County Water & Sewer Rate Policies

2022 Georgia Water & Wastewater Report

RCAP Rates Guide

RCAP Formulate Great Rates Guide

Schedule of Rates, Fees, and Penalties

WATER CONNECTION FEES

(1) **Consumers:**

(a) For each connection after Construction of Water Lines:

3/4 inch line: $ 900.00

1 inch line: $1800.00

2 inch line: $3000.00

(Plus $75 Deposit)

(b) If it is determined by the Baldwin County Water and Sewer Department that a consumer cannot pay the above water connection fees due to consumer's financial difficulties, then upon satisfactory evidence, the Baldwin County Water and Sewer Department is authorized to allow said consumer to pay the appropriate water connection fee over a period of six (6) months, beginning with the date of installation.

(2) **Developers:**

For each connection where developer installs line at no charge to the Baldwin County Water and Sewer Department:

3/4 inch line: $900.00

1 inch line: $1,800.00

2 inch line: $3,000.00

Security Deposits:

A seventy-five dollar ($75.00) security shall be collected for water from all consumers who rent for residential purposes. A one hundred dollar ($100.00) security deposit shall be collected from all consumers who rent for commercial purposes. Security deposits for industrial renters shall be charged on a case by case basis.

Unpaid Bills:

(1) Property owners shall be responsible for any unpaid water bills.

(2) A twenty-five ($25.00) transfer fee must be paid to have services transferred from one customer to another customer.

RATE SCHEDULES

A. Generally:

All water rates for the Customers of the Baldwin County Water and Sewer Department shall be set time to time by the Baldwin County Water and Sewer Department with requirement of

Approval by the County. However, water rates will not increase without a ten (10) day notice to the Customer. Notice will be sufficiently given to the Customer by A publication of the rate changes once in the official newspaper of Baldwin County prior to the rate increase.

B. Water Rates:

(1) The base water rates for residential, industrial and commercial Customers with a meter of one inch or less shall be as follows: (as adopted on September 1, 2008)

(a) For the first 1,000 gallons used, whether or not any water is used at all, there shall be a minimum charge of $20.50 ($16.00 water meter charge plus $4.50 for first 1,000 gallons).

(b) For any usage from 1,000 gallons to 5,000 gallons, there shall be a charge of $4.50 per additional 1,000 gallons.

(c) For any usage from 5,001 gallons to 30,000 gallons, there shall be a charge of $5.60 per thousand gallons.

(d) For any usage over 30,000 gallons, there shall be a charge of $6.70 per thousand gallons.

(2) The minimum monthly charge for water meters of one inch in diameter or greater for residential, industrial, and commercial Customers shall be as follows:

(a)	¾ inch to 1 inch	$16.00
(b)	2 inch	$35.00
(c)	6 inch	$350.00
(d)	8 inch	$425.00
(e)	Above 8 inches is set by the Baldwin Co. Water and Sewer Department	

(3) The water fire line monthly minimum rates for industrial and commercial customers shall be as follows:

	Size	Rate
(a)	4 inch	$8.00
(b)	6 inch	$10.00
(c)	8 inch	$15.00
(d)	10 inch	$20.00
(e)	(Above 10 inches is set by Baldwin County Water and Sewer Department)	

(4) Late fee is three dollars ($3.00) if bill is not paid by the 15th of each month.

(5) Nonpayment fee is fifty dollar ($50.00) if bill is not paid by the end of business day of the 25th of each month. If the 25th falls on a weekend or holiday then the nonpayment fee will be imposed if the bill is not paid by the end of the next business day.

C. Return Checks/Bank Drafts

Customers who make payments with checks that are not covered with sufficient funds in the depository upon which they are drawn shall be charged a return check fee set by the Baldwin County Water and Sewer Department Initially, the return check fee shall be thirty-five ($35.00). This fee may be amended by Baldwin County Water from time to time and any such amendment shall become effective upon publication of notice thereof in the official organ of Baldwin County for one week. The Superintendent may require any customer whose check has been returned for insufficient funds to pay monthly water bills and all other charges assessed by the Baldwin County Water in cash or certified funds for the duration of their account with the Baldwin County Water and Sewer Department

D. Resumption of Discontinued Service:

If water service is discontinued for nonpayment, the Baldwin County Water shall not resume water service to the violating Customer until the bill and all penalties have been paid in full and a fifty dollar ($50.00) non-refundable service fee has been paid to the Baldwin County Water and Sewer Department by the violating Customer.

E. Additional Services

For an additional service call a fee of twenty-five ($25.00) per service call will be assessed and added to the customer's water bill. Additional service calls are for the following:

a) Termination of Service - If the customer prevents access to the meter so that service may not terminated.
b) Re-Read - Customers request that we make a return visit for a re-read of the meter.
c) Home Inspections - Requests for water be turned on for home inspections.
d) Turn On or Off - Requests for inactive or active water to be turned on or off to fix a leak.
e) After Hours: Requests for after-hours connects or reconnects.

2022 GEORGIA WATER & WASTEWATER REPORT

UNC SCHOOL OF GOVERNMENT
Environmental Finance Center

Carl Vinson Institute of Government
UNIVERSITY OF GEORGIA

GEFA

ABOUT THIS REPORT

This report is just one resource in a series on Georgia water and wastewater rates surveys, funded by the Georgia Environmental Finance Authority (GEFA) and compiled by the Carl Vinson Institute of Government at the University of Georgia (UGA) and the Environmental Finance Center (EFC) at the University of North Carolina at Chapel Hill.

In addition to this report, there is an accompanying set of tables and standardized water and wastewater rate sheets for each participating utility. Furthermore, with the online, interactive Rates Dashboard, users can compare utilities against various attributes such as geographic location, system characteristics, and customer demographics, as well as financial indicators and benchmarks.

CONTRIBUTORS TO THE REPORT

The Environmental Finance Center at UNC Chapel Hill:

Erin Riggs, *Executive Director*, **Julia Cavalier,** *Research Director,* **Delia Wagner,** *Graduate Research Assistant,* **Evan Liebgott,** *Research Assistant,* **Eva Ramirez** *Graduate Research Assistant, and* **Garrett Basnight,** *Research Assistant*

4 Myths

About Water Pricing

1 MYTH: High Rates are Bad

FACT: Higher rates do not necessarily reflect poor or inefficient management. Some utilities may not be charging enough to properly maintain assets or have not re-examined rate structures.

2 MYTH: Comparing Rates is Simple

FACT: Rates alone do not tell the entire story. Rates should reflect the cost of providing service and can vary based on many factors. Comparing rates is really just a starting point for more analysis.

3 MYTH: Pricing is Simple

FACT: Utilities employ a variety of pricing structures and should be thoughtful in designing those structures to meet their needs, objectives, and priorities as they evolve over time.

4 MYTH: Promoting Conservation Requires Increasing Block Rate Structures

FACT: Many different types of pricing structures can be employed to encourage conservation, not just increasing block rate. Utilities should aim to focus on all aspects of pricing, not just rate structure design.

For more information, visit the original blog post at https://efc.sog.unc.edu/myths-about-water-rate-setting/

UNC SCHOOL OF GOVERNMENT
Environmental Finance Center

INTRODUCTION

Between December 2021 and February 2022 the EFC and UGA conducted a survey of **530** rate-charging water and wastewater utilities in Georgia.

A total of **491** utilities **(93%)** from all 159 counties in the state are represented in this survey group.

Water and wastewater rate setting is one of a local government's most important environmental and public health responsibilities. This report aims to provide utility professionals and public officials with an up-to-date, detailed survey of current statewide rate structures and trends, and thus assist in the protection of public health, improvement of economic development, and promotion of sustainability in Georgia.

Continue reading to find out how water and wastewater **rates** ultimately determine how much **revenue** a community has to maintain **vital infrastructure**.

BY THE NUMBERS

349 utilities serving
WATER AND WASTEWATER

138 utilities serving
WATER ONLY

4 utilities serving
WASTEWATER ONLY

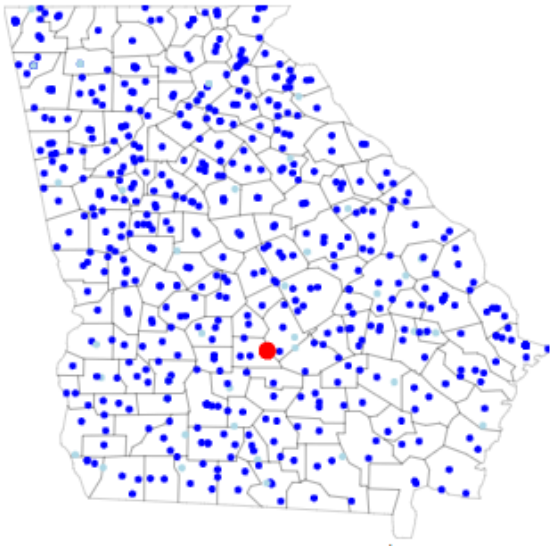

81%
MUNICIPAL

8%
COUNTY/DISTRICT

8%
AUTHORITY

3%
OTHER

*includes for-profits & consolidated governments

Distribution of Utilities by Service Population (n=491)

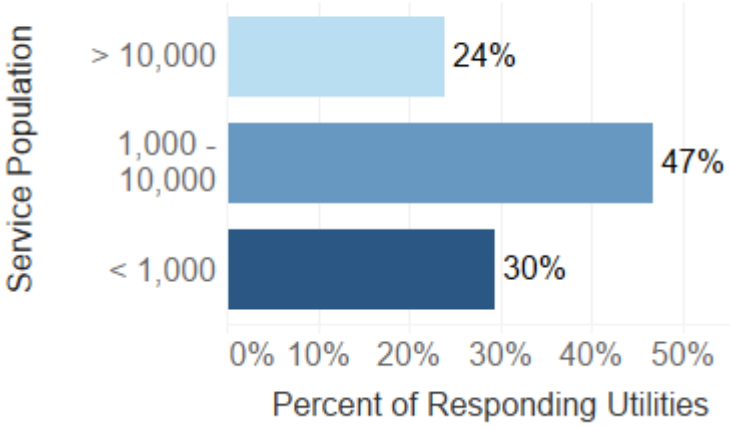

WHAT DO RATE STRUCTURES LOOK LIKE?

Base Charges

Considerable variation exists in how utilities model rate structures, but almost all use a combination of a ***base charge*** and a ***volumetric charge***.

Base charges do not vary from one billing period to the next regardless of consumption. These charges can be a constant, universal amount for all customers, or vary based on customer class (e.g., residential vs. commercial) or even meter size.

Base charges sometimes feature a ***consumption allowance***, which is a volume of usage included in the base charge.

In Georgia, **61% of water rate structures** with base charges included a consumption allowance. The median monthly consumption allowance is **2,261 gallons.**

Median Monthly Base Charge

$17.12

WATER

$17.08

WASTEWATER

$30.00

WATER AND WASTEWATER

Larger water utilities tend to have **lower** base charges than smaller utilities, likely because they are able to spread **fixed costs** across a greater customer base.

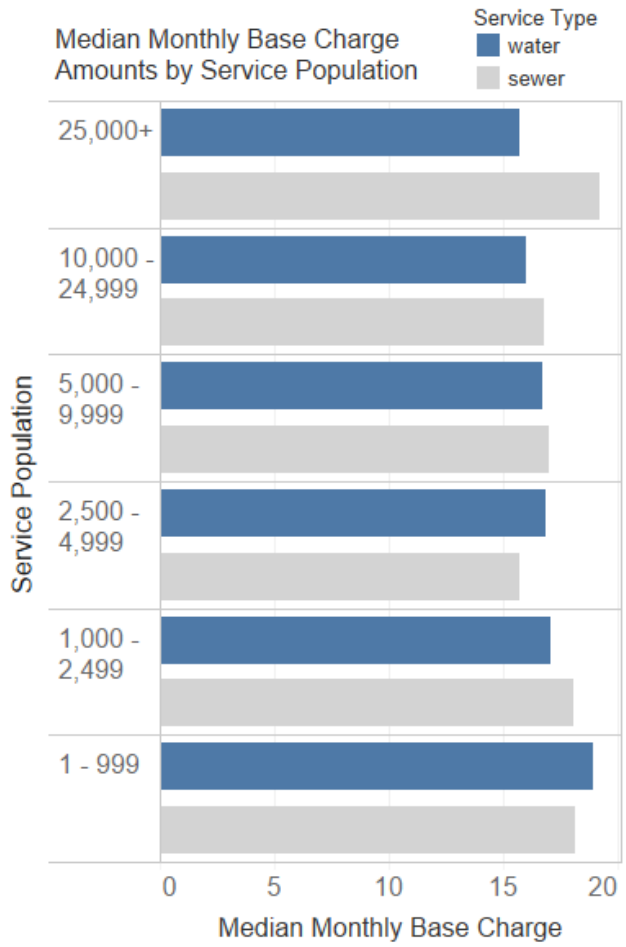

WHAT DO RATE STRUCTURES LOOK LIKE?

Ways to Charge for Volume

Volumetric (variable) charges are based on the volume used after exceeding the consumption allowance included with the base charge (if any). Three common ways to charge for volume are uniform, increasing block, and decreasing block rates.

With a ***uniform rate*** structure, the rate does not change as the customer consumes more.

In an ***increasing block rate*** structure, the rate increases as the customer uses more. This structure is often employed by utilities that want to encourage conservation by making higher volumes of consumption more expensive.

The rate per unit decreases with greater consumption in a ***decreasing block*** structure. This type of rate structure may be used to encourage economic development, but likely will not encourage conservation.

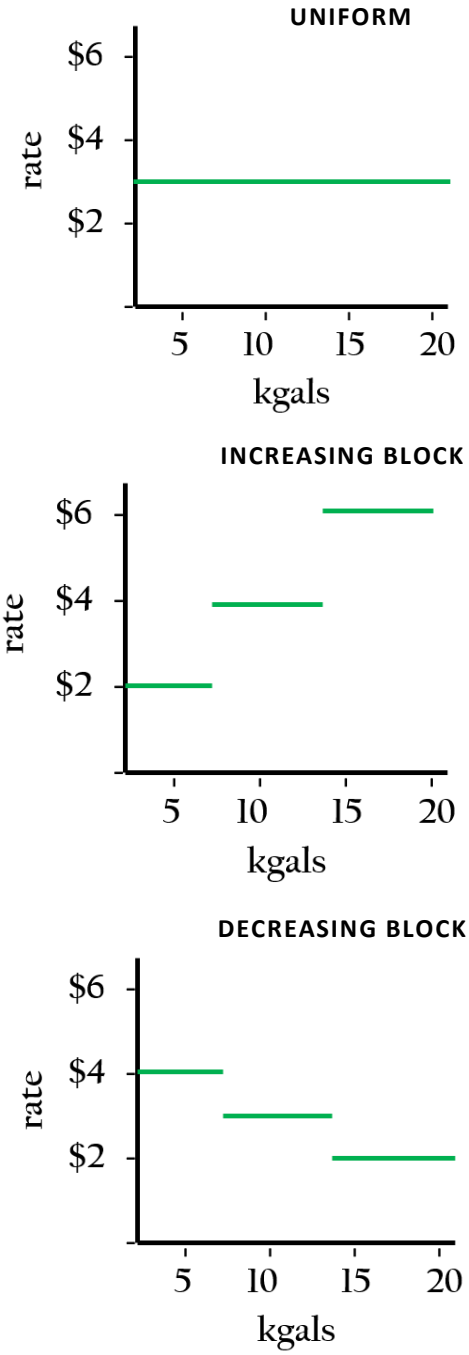

What is the most common volumetric rate structure?

In Georgia the majority of residential water rate structures use an **increasing block rate** (52%) and residential wastewater rate structures use a **uniform block rate** (59%) to charge for volume. Standardized to thousands of gallons, the median rate from 4 to 5 kgal is **$3.81 for water** and **$4.62 for wastewater** services.

WHAT ARE UTILITIES CHARGING?

Georgia's Average Bills

	Residential (5,000 GALS)		Commercial (50,000 GALS)	
WATER	**$31.00** MONTH	**$372.10** YEAR	**$261.00** MONTH	**$3,128** YEAR
WASTEWATER	**$34.30** MONTH	**$412.00** YEAR	**$301.00** MONTH	**$3,618** YEAR

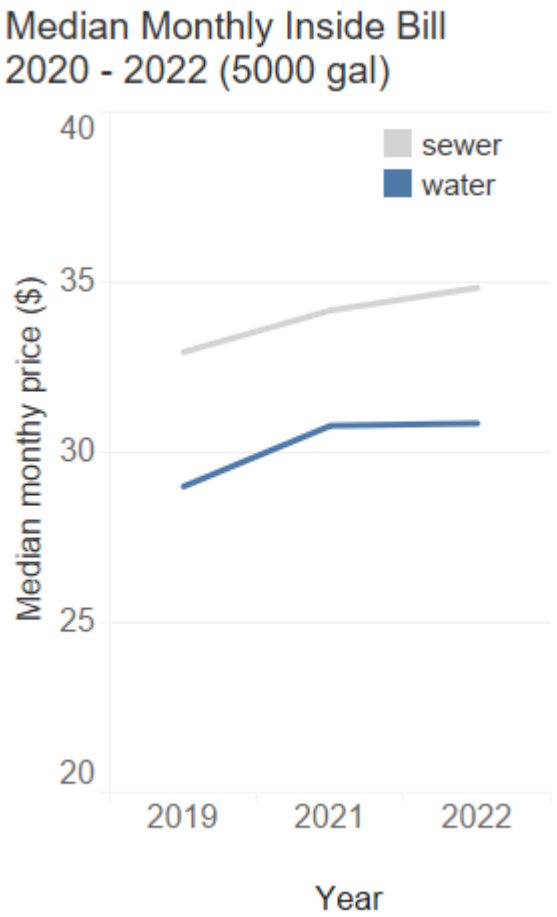

Range of Bills

The graph at left shows the median monthly inside bill for both water and sewer at 5,000 gallons consumption. Rate surveys were conducted in 2019, 2021, and 2022. Median water and sewer rates increased between 2019 and 2021. Median water rates were relatively flat between 2021 and 2022 while median sewer rates increased during this time.

On average, sewer rates were 13% greater than water rates during the three year period.

HOW DO OUTSIDE RATES COMPARE?

Inside vs. Outside Rates

All of the charges presented above refer to what utilities charge customers that live within their political boundaries. Municipal utilities often serve customers who live outside of city limits, and a handful of other utilities specify geographical boundaries within their service areas and identify their customers as residing "inside" and "outside" those boundaries. In many cases, utilities charge different rates for customers living inside or outside the boundary.

In Georgia **38%** of water rate structures and **37%** of wastewater rate structures charge outside rates.

The median monthly outside bill at 6,000 gallons is 1.29 times the inside bill for both water and for wastewater.

The median combined water and wastewater bill at 5,000 gallons is **$32.86** for customers inside service boundaries and **$42.25** for those outside of service boundaries.

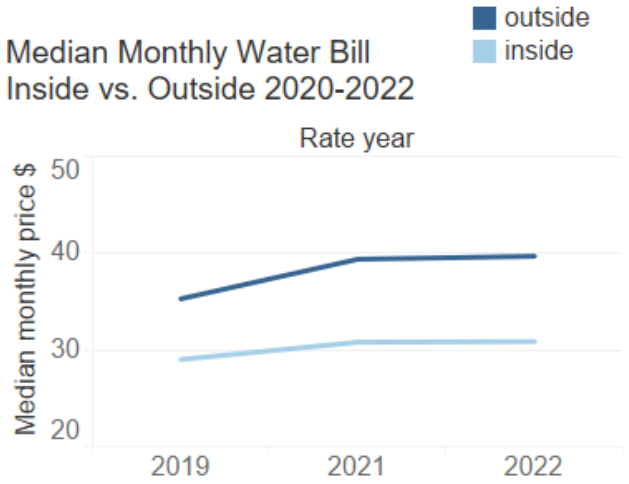

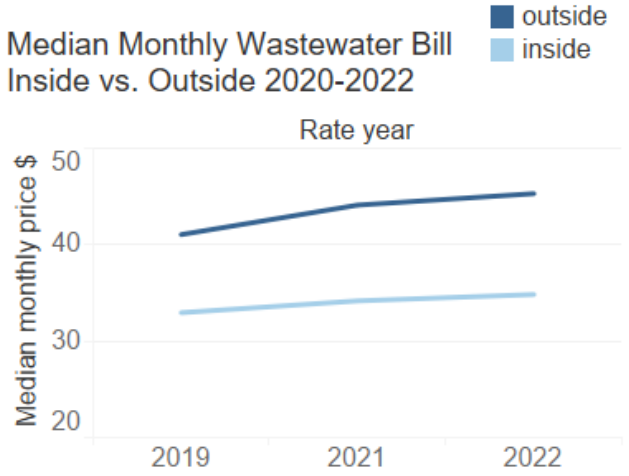

As volume increases, the median combined water and wastewater bill for outside rates tends to rise at a *greater rate* than the median combined water and wastewater bill for inside rates. Outside bill amounts are 27% *higher* than inside bill amounts.

Generally, outside rates are greater than inside rates because customers reside farther, on average, from the water and wastewater treatment plant than inside customers. Extra costs for distribution and collection systems may justify higher rates for outside customers.

HOW DO IRRIGATION RATES COMPARE?

Some utilities offer unique irrigation rates. When the same utility provides water and wastewater service, the wastewater service is often tied to metered water consumption. To separate outdoor water use, which does not go into the wastewater system, from wastewater use, utilities will sometimes meter separately for irrigation. These unique irrigation rates do not charge customers for the equal wastewater use and, as a result, are often slightly more expensive than water rates, but less than the combined water/wastewater rate if no irrigation rate existed.

In Georgia, most irrigation rates are equivalent to water rates. Only 6% of rate structures have unique irrigation rates. Of the 32 rate structures with unique irrigation rates, 26 rates are 100-150% greater than water rates, while 6 rates are over 150% greater than water rates.

WHEN WERE RATES LAST CHANGED?

- *The* **MAJORITY** *of utilities have updated rates as of* **AT LEAST 2019**.
- *Between one in three and one in four utilities have not updated their rates since* **2018** *or earlier.*

In Georgia, **most utilities** are actively evaluating and modifying their rate structures every one to two years. The EFC recommends that utilities review their rates **at least every two years** to keep in pace with inflation. An annual or biennial review gives utilities the opportunity to evaluate if their current rates are enough to cover the necessary operating expenses and depreciation, not to mention savings goals for capital planning, emergencies, or other funds.

Utilities that modestly raise rates at more frequent intervals accumulate more revenue over time than those that implement less frequent, but more drastic rate increases. Customers are also less likely to balk at more gradual, periodic rate increases than a one-time price hike.

The calendar year when sampled rate structures were first put into effect is shown below.

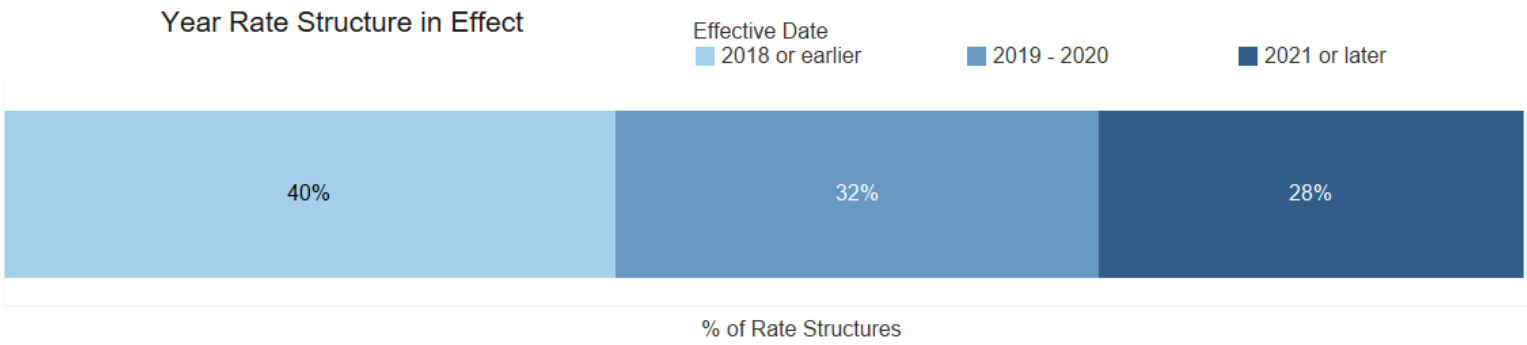

HOW HAVE RATES CHANGED?

The annual rates survey has been an ongoing partnership between GEFA and the EFC since 2007. As a result, years of rates data have been collected and are available to analyze trends and changes. As the costs of providing service rise, so should rates. Providing water and wastewater service is costly and infrastructure-intensive. Regular, predictable rate increases are common and recommended.

The ***presence*** of a change as well as the ***level*** of that change is important when assessing revenue needs for utilities. The figures below reflect changes in residential rates over the last fiscal year. Each figure reflects data from a cohort. The figures below only represent those rate structures present in both the 2020 and 2021 rates surveys.

Percent of Rate Structures with Increased Residential Rates from 2021-2022

Water N=349 Rate Structures, Wastewater N=353 Rate Structures

12%

WATER RATE STRUCTURES

14%

WASTEWATER RATE STRUCTURES

Of Those Rate Structures with Increased Rates Since 2021 How Much Did They Increase?

	Median Increase	*Average* Increase
WATER	4.69%	0.99%
WASTEWATER	5.00%	0.89%

Given that in most cases bills are quite low, a large percentage rate increase may not translate to a large dollar amount increase. **The median bill increase at 5,000 gallons for rate structures with increases was just $1.23 for water and $2.00 for wastewater.**

DO PRICES REFLECT THE TRUE COST OF SERVICE?

Utilities sometimes fall into the trap of pricing services based on what their customers have always paid, rather than focusing on the bottom line of their balance sheets. This year, financial data were available for **433 utilities** out of the total 491 utilities (88%).

Let's start with some essential definitions:

WHAT IS OPERATING RATIO?

Operating ratio, also known as cost recovery ratio, is a financial benchmark that determines if an entity is operating at a loss, gain, or just breaking even. The ratio is simply the division of operating revenues by operating expenses, which can include or exclude depreciation. A utility's operating ratio must be *at least 1.0* to break even.

$$\text{Operating Ratio} = \frac{\text{Operating Revenues}}{\text{Operating Expenses}}$$

WHY INCLUDE DEPRECIATION?

Whenever possible, depreciation should be included in operating expenses to account for the inevitable cost of replacing equipment and infrastructure at the end of its expected useful life. Depreciation allows costs to be figuratively parceled out over time, avoiding a sudden, enormous expense when the time comes to replace assets.

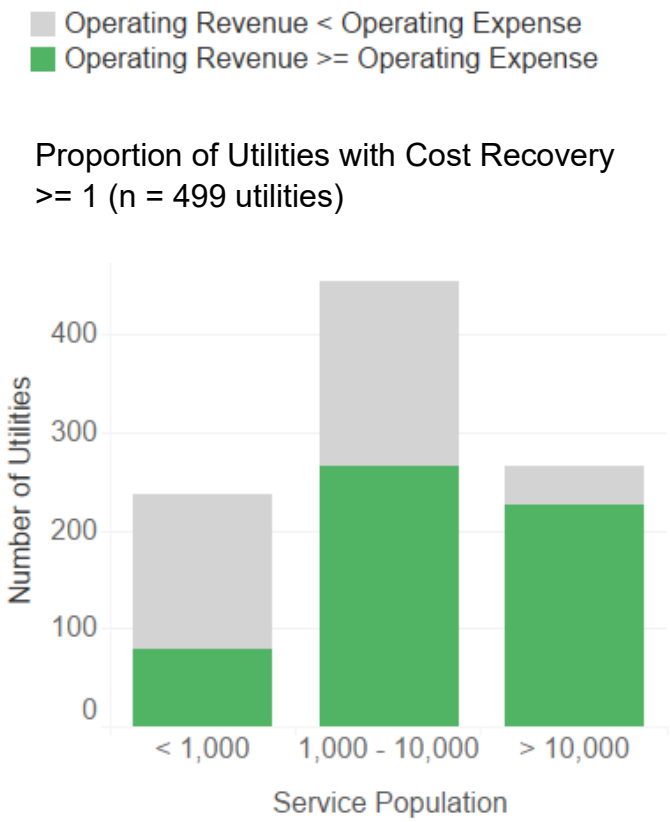

DO PRICES REFLECT THE TRUE COST OF SERVICE?

With depreciation included, just **294** utilities generated enough revenue to cover operating expenses. Twenty-five out of 214 of the utilities with an operating ratio of less than 1.0 serve more than 10,000 people.

All utilities face the issue of generating sufficient revenue to pay for the high fixed costs of providing safe and reliable services. However, smaller utilities must spread out those high fixed costs over a smaller customer base.

WHAT IS CONSIDERED HEALTHY?

The Cost Recovery dial on the **Rates Dashboard** uses red, yellow, and green colored bands to give the viewer a simplified idea of the health of the utility's operating ratio at a glance.

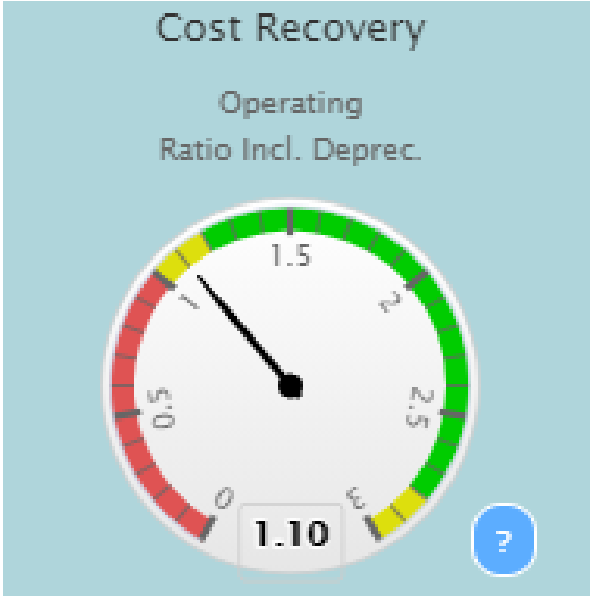

While it is clear that being "in the red" is not a good position, there is no universal standard for what constitutes a healthy operating ratio beyond 1.0. Generally, as the Cost Recovery dial shows in the green band above, an operating ratio including depreciation of **at least 1.2** allows utilities to account for day-to-day operations and maintenance expenses, as well as for future capital costs.

ADDITIONAL FINANCIAL DATA

The 2022 Rates Dashboard features more than 10 financial metrics, including **days cash on hand, quick ratio, asset depreciation,** and more!

HOW AFFORDABLE ARE RESIDENTIAL BILLS?

Assessing rate affordability remains a challenge because there is no one true, universal measure of affordability. The most commonly used indicator, **Percent Median Household Income (Percent MHI)** calculates how a year's worth of water and wastewater bills, 5,000 gallons/month in this case, compares to the MHI of the community served by the utility. MHI is provided by the most recent 5-year estimates of the US Census Bureau's American Community Survey.

	MEDIAN % MHI for 5,000 Gals/Month:	RANGE OF % MHI for 5,000 Gals/Month:
WATER	0.95%	0.12% - 3.63%
WASTEWATER	1.05%	0.06% - 2.68%

As all communities have a range of income brackets, it is important to keep in mind that what may seem like a small percentage of the community's MHI can have a proportionally larger impact on lower-income populations. This includes households making less than or equal to **federal poverty guideline, $26,200 for a family of four in 2020,** according to the US Department of Health and Human Services. In Georgia, the 75th percentile water bill and wastewater bill equates to about **1.16% income for water and 1.29% for wastewater**, at the federal poverty guideline.

For a more in-depth look at the affordability of water and wastewater services in a community, the EFC offers the free, Excel-based **Residential Rates Affordability Assessment Tool**, available for download on our website.

Further Resources

All of the following free resources are available at:

⇒ https://efc.sog.unc.edu/resource/georgia-rates-resources/

2022 Water and Wastewater Rates Dashboard

Rate tables in Tableau with rates and rate structures for residential, commercial, and irrigation customer classes for water and wastewater.

Tableau software tool with standardized rate sheets for all utilities in the survey.

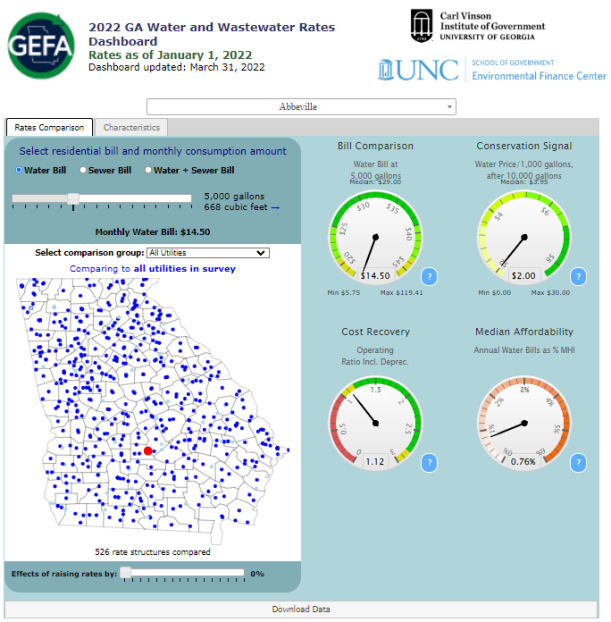

Questions? Feedback?

UNC
SCHOOL OF GOVERNMENT
Environmental Finance Center

Contact us

Evan Kirk

emkirk@sog.unc.edu

(919) 962-2789

Need Technical Assistance?

Fill out the form below:

https://efc.sog.unc.edu/technical-assistance/

Acknowledgments

The Environmental Finance Center would like to thank the Georgia Environmental Finance Authority, the Carl Vincent Institute of Government at the University of Georgia, and all of the water and wastewater systems that participated in this year's survey. The EFC would also like to thank the Georgia Department of Community Affairs for the financial data presented both on the dashboard and in this report.

UNC SCHOOL OF GOVERNMENT Environmental Finance Center

Carl Vinson Institute of Government UNIVERSITY OF GEORGIA

GEFA

Formulate Great Rates

The Guide to Conducting a Rate Study for a Small System

RURAL COMMUNITY ASSISTANCE PARTNERSHIP

an equal opportunity provider and employer

This guide was originally written by the Midwest Assistance Program, the Midwest RCAP, on behalf of Rural Community Assistance Partnership, Inc. RCAP, Inc. updated the guide with insight from Water Finance Assistance.

Copyright © 2021

The entire contents of this guide are available on the RCAP website at *www.rcap.org* This material is based upon work supported under a grant by the Rural Utilities Service, United States Department of Agriculture. Any opinions, findings, and conclusions or recommendations expressed in this material are solely the responsibility of the authors and do not necessarily represent the official views of the Rural Utilities Service.

Formulate Great Rates

The Guide to Conducting a Rate Study for a Small System

Rural Community Assistance Partnership, Inc.

1725 I Street NW, Suite 225
Washington, DC 20006
(202) 408-1273
info@rcap.org

www.rcap.org

Table of Contents

Introduction 1

Engaging technical assistance providers 2

Chapter 1: How to structure rates and set rate policies 5

Base rates and flow rates— fixed expenses and variable expenses 5

Types of pricing structures 6

Other rate structure elements 8

Which rate structure is right for your community? 9

Money in the bank 10

Charges to new customers 11

Chapter 2: Ensuring that revenues are spent efficiently 13

Quick efficiency checks 13

Are we getting paid for every gallon we produce or purchase? 14

Are energy bills as low as possible? 15

Working together to increase efficiencies 17

Are we getting the longest useful life out of our assets? 18

Chapter 3: Is it time for a rate increase? 21

Gathering data 22

Projecting changes in revenue over time 28

Projecting changes in expenses over time 29

Are your current rates adequate for the future? 30

Chapter 4: Adjusting the base and flow rates 35

Calculating your financial target and revenue needs 35

Adjusting your gallon allowance in the base rate 39

Adjusting your current base rate and flow rate 39

Another approach: fixed and variable expenses 43

So which rate is right? 46

Your rates and debt 51

Beyond the single-block rate structure 52

Chapter 5: Adjusting rates: how you do it makes a difference 53

Educate the board 53

Educate your customers before the increase 54

Getting the word out 55

Final thoughts 56

RCAP

Introduction

Is your water or wastewater system rate-regulated?

This guidebook is primarily intended for water and wastewater systems that have the authority to set their own rates, subject to board approval. Most states and territories have a public service commission or public utility commission that regulates utilities that provide essential services, including drinking water and wastewater. Some, but not all, water and wastewater systems in a state or territory fall under the regulation of these commissions. If your water or wastewater system falls under the regulation of a commission and does not have the authority to set its own rates, you should follow the commission's ratemaking process, which may differ from the processes recommended in this guidebook.

Your water system has an important responsibility to your community. Your job is to ensure that the water system provides residents and businesses with an adequate supply of safe drinking water delivered at a price that not only covers all of the costs of providing the service but also allows the system to prepare and plan for providing that service for many years to come. You must ensure that the water meets all regulatory standards, is reliable, meets the expectations of your community, and is available in sufficient quantity for all current and future users. This is a big responsibility.

Water systems operate much like a business. You are providing a product or a service—safe drinking water—which costs money to produce, and you have revenue that customers give to you to provide that service according to the rates you set. Your customers pay you for the amount of service they receive through their water bill. If you work for a governmental system, this funding source operates very differently from the property taxes and sales taxes that fund other public services.

In order to protect public health and to provide safe drinking water to your current and future users, your water system must generate sufficient revenue to pay for:

- The operations and maintenance of your system to treat, store, pump, and distribute water to your customers in compliance with regulations.
- The replacement of capital assets as they wear out and the acquisition of new assets to meet changes in customer demand and in regulations.
- The financial security of your water system during emergencies and unexpected changes in revenue.

To remain viable for the future and to keep rates at a reasonable level for their customers, most small water systems will likely need to incur debt to cover the cost of infrastructure over time. Small water systems that set appropriate rates and maintain good financial records are more likely to access the loans necessary to maintain their assets and are more likely to qualify for favorable interest rates and terms.

The purpose of this guide is to help you analyze the sufficiency of your system's current rates and to make adjustments to those rates where needed. When you go through the process outlined in this guide and set rates accordingly, you will know that the system will receive the proper amount of revenue from customers to cover all of the functions of the water system.

This guide breaks down all the steps that need to be taken in the process of analyzing the sufficiency of your rates. Chapter 1 provides an overview of the elements of rate structures and rate development, as well as the policy decisions that water systems have to make as part of the rate analysis process. Chapter 2 discusses preparing for the rate analysis by ensuring that revenues will be spent as efficiently as possible and that future needs are identified properly. Chapter 3 describes the process of collecting necessary data, projecting costs over time, and measuring the sufficiency of current rates. Chapter 4 demonstrates how to price water appropriately to cover current and future expenses. And Chapter 5 illustrates how to educate customers about the need for rate adjustments now and in the future.

Your community is counting on you to make the right—if often difficult—decisions for the water system. This guide will help you make better decisions by showing you what is involved in the process and raising the issues that need to be addressed.

Engaging technical assistance providers

The process of completing a thorough rate analysis is long and is most successful when conducted by someone with experience. As a result, you may wish to engage the services of a technical assistance provider with a background in rate analysis. Small systems may be able to receive free technical assistance from RCAP (who produced this guide) and other organizations, and there are consultants for hire that specialize in rate analyses. Page **57** of the guide provides information about RCAP's national network of nonprofit organizations working to ensure that rural and small communities throughout the United States have access to safe drinking water and sanitary waste disposal.

Many water systems update their rates periodically by making incremental changes to their current prices based on their annual budget. This strategy may not fully capture all of the current and future expenses of the system, nor may it capture the efficiencies that can be achieved in operations. Or rates are set by looking at neighboring communities which may have very different costs and infrastructure needs. A better approach to rate analyses includes understanding future capital needs, minimizing costs, and developing multiple rate alternatives to find the design that best meets the needs of the community. It may be difficult for water systems with small staffs, potentially part-time or volunteer, to commit the time and resources necessary for a thorough analysis on its own. And a technical assistance provider brings an array of ideas and experience from working with multiple water systems across a geographic area.

Funding agencies tend to look more favorably on applications from water systems that have engaged the assistance of an expert in designing

their rates, and some funders are requiring systems to undergo a rates audit from an expert prior to receiving any loans or grants. Customers and boards may also be more accepting of necessary rate adjustments when they are proposed by a neutral, third-party expert rather than from staff.

If you decide to engage the expertise of a technical assistance provider, it is important to find one who can best assist your community. Find out what services the technical assistance provider can offer to you. Ensure that they are familiar with the regulations in your state, territory, or tribal nation. And ask for references from water systems that have worked with them previously that are similar to you in size, demographics, and ownership.

This guide can be used by a community to develop its own rate analysis. It can also be used in conjunction with a technical assistance provider.

Wastewater

Many small communities also provide wastewater service, which is vital to protecting public health and the environment. Like drinking water, wastewater systems have a lot of expensive infrastructure to collect and treat sewage, and that infrastructure must be maintained over time. Wastewater rates charged to customers must also bring in enough revenue to pay for operations and maintenance, capital replacement, and reserve funds. The processes recommended in this guidebook can be used to analyze and adjust wastewater rates as well. Throughout the guide, there are callout boxes that highlight special considerations for wastewater rates.

Notes

Chapter 1: How to structure rates and set rate policies

"Our job is to keep rates low!"

"They'd vote the board out if we raise rates!"

"We haven't raised rates in 15 years, and we're proud of it!"

"We have a lot of folks on fixed incomes who can't afford to pay more!"

Chances are you have heard comments like these. Maybe you've made them yourself. If so, you're not alone. For far too long, both water systems and their customers have undervalued water. Some customers may even say, "Water should be free!" The water itself might be free, but the process of pumping, treating, storing, distributing, operating, and maintaining the system in compliance with regulations is definitely *not* free. And, for most systems, the costs for these functions are going up every year. Water is a product and a service, and it should be paid for in proportion to the amount used.

We need a new mindset. Water systems should operate as self-sustaining entities, and the largest source of revenue for most water systems is the rates it charges its customers for water use. You are responsible for making sure that customers are charged enough to cover all of the expenses to run the system. You are also responsible for spreading those charges fairly and equitably among all the customers served by your system. Rather than bragging about keeping rates artificially low, we should instead take pride in having rates that will allow us to deliver safe, reliable drinking water to current and future customers.

This guide will outline the steps necessary to set the best rates for your community. First, it is important to identify how rates are structured and what policy decisions water systems must make regarding rates and finances.

Base rates and flow rates—fixed expenses and variable expenses

Rate structures may include a base rate—a charge per billing period regardless of usage—and a flow rate—a charge based on the volume of water consumed. Many rate structures include both. The reason for having these two different rate elements is tied to your expenses. Your system has expenses called "fixed expenses" that will have to be covered even if you never produce a single drop of water, such as long-term debt, reserve funding, billing and collecting expenses, operator salaries, a portion of the clerk's salary, etc. The base rate is like paying for membership in the system—a share of what it cost to put the system in and the privilege of being hooked to it, regardless of how much water is actually used. You also have expenses

called “variable expenses” that are directly related to producing water, such as chemicals and equipment, utilities, contracted repairs, etc. Customers who use more water should pay more towards these costs.

Types of pricing structures

The table below describes the four most common types of pricing structures. As you will see, each structure type has advantages and disadvantages.

Uniform flat rate

- Customers pay the same amount, regardless of the quantity of water used
- Used in unmetered systems

Example:
Each customer is charged a flat rate of $30 per month for unlimited water use

Advantages:
- No expense for installing and reading meters
- Easy to calculate and administer
- Billing is cheaper and easier and would not require specialized software

Disadvantages:
- All users pay either too much or too little for what they use
- Promotes high consumption
- No financial incentive to fix leaks

Single block rate

- Customers are charged a constant flow rate (price per gallon or cubic foot), regardless of the amount of water used
- Often is coupled with a base rate for having service available

Example:
$21 base rate + $4.50 per 1,000 gallons used

Advantages:
- Easy to administer and simple to understand
- Cost to customer is in roughly direct proportion to amount used
- May encourage water conservation if priced appropriately

Disadvantages:
- May discourage businesses, industries, and institutional customers that use high volumes of water

Decreasing block rate

- The flow rate declines as the amount used increases
- Each succeeding consumption block rate is less expensive
- Structure is based on the assumption that the cost to produce the next gallon declines as consumption goes up

Example:
$25 for first 2,000 gallons used

$3.50 per 1,000 gallons from 2,001 to 6,000 gallons

$3.00 per 1,000 gallons from 6,001 to 10,000 gallons

$2.50 per 1,000 gallons for everything over 10,001 gallons

Advantages:
- Attractive to large-volume users

Disadvantages:
- At higher usage levels, water may be billed below what it costs to produce
- Low-volume users may be subsidizing large-volume users

Increasing block rate

- The flow rate increases as the amount used increases
- Each succeeding consumption block is more expensive
- Structure is based on the assumption that water rates should promote water conservation and reduce the stress on the system caused by increased demand

Example:
$25 for first 2,000 gallons used

$2.50 per 1,000 gallons for 2,001 to 6,000 gallons

$3.00 per 1,000 gallons for 6,001 to 10,000 gallons

$3.50 per 1,000 gallons for everything over 10,001 gallons

Advantages:

- May promote water conservation, which is especially important in areas of limited water supplies, limited water rights, or systems that are approaching treatment or storage capacity
- Provides water for essential indoor use at a reasonable price and charges a premium to those with discretionary water use

Disadvantages:

- Higher costs for high usage may discourage industry from locating in service area
- Larger households pay higher bills even if per-capita water use is typical for the community

Wastewater Rate Considerations

Wastewater rates can be structured in the same way that water rates are structured. One important issue for communities is how to determine the volume of wastewater collection. Most wastewater systems are not metered. Rather, they rely on meter readings from the drinking water system to determine the volume of wastewater collected. Many communities charge one gallon of wastewater for every gallon of water read by the meter, a 1:1 relationship. But not every gallon of drinking water ends up in the wastewater system, especially if it is used for outdoor irrigation. Some communities meter outdoor water use separately and do not include it in wastewater bills. Others use a formula to approximate wastewater use (for example, 80 percent of water bills). Or they take the average drinking water use of three months where outdoor irrigation is not typical (for example, December through February) and use it as the wastewater volume throughout the year. You may also choose to levy a surcharge on customers with “high-strength discharges,” which are typically non-residential customers with higher-than-average levels of biochemical oxygen demand (BOD), total suspended solids (TSS), oil and grease (0&0), metals, and so forth.

Other rate structure elements

You have a few other rate structure elements to consider:

- **How often to bill?** Most water systems bill their customers every month, every other month, or once a quarter. Monthly billing gives you a steadier flow of funds into the water system and can help your customers identify leaks more quickly. And monthly billing can make it easier for customers who are struggling financially to pay their bill. But the cost of billing will be higher.
- **How to separate out customers, if at all?** If all of your customers are similar (for example, mostly residences), you may wish to put all of your customers into one category and charge them the same rate. But if your customer base includes a mix of residential, commercial, industrial, and institutional customers, or if you are a governmental water system that serves customers outside your jurisdictional boundary, you may wish to create separate customer classes and charge different rates. As a proxy, some water systems will charge a different base rate based on the meter size but charge the same flow rate to all customers.
- **What usage to include in the base rate, if any?** You have the option to include some consumption in the base rate that customers must pay every month, and that amount can vary with meter size if your base rate varies with meter size. It is not uncommon for water systems to include up to 3,000 gallons a month or more in the base rate, though the national trend is towards not including any use in the base rate.
- **How often should rates change?** You should review your rates at least annually using the procedure outlined in this guide, and you should make adjustments anytime the rates fail to recover enough revenue to meet all of your needs. Some systems choose to pass automatic rate increases, either over a set time period or indefinitely, to ensure that revenues at least keep pace with inflation. But having an automatic rate increase does not relieve you of the responsibility to evaluate your rates regularly.

Base Rate by Meter Size

One method of calculating the base rate by meter size is to use the concept of equivalent residential units, or ERUs, which also known as equivalent residential connections (ERCs) or equivalent dwelling units (EDUs). A residential household would be 1 ERU, and customers with larger meters would be multiple ERUs. A common way to calculate ERUs is based on the maximum flow capacity of each meter size. For example, a typical 5/8” meter for a residential customer may have a maximum flow capacity of 20 gpm. That same system may have a 2” meter with a maximum flow capacity of 160 gpm. To calculate ERUs, simply divide the flow capacity of the larger meter by the flow capacity of the smaller meter. The 2” meter here is 8.0 EDUs. If the base rate for the residential customer were $10 per month, the base rate for the customer with the 2” meter would be 8.0 *x* $10, or $80 per month. You can obtain the maximum flow capacity of your meters from their manufacturers.

If rates are reviewed annually as part of the budgeting process, they can be adjusted in small, annual increments instead of in infrequent but large increases. Customers are much more likely to be unhappy with an increase every few years of 10 percent, 20 percent, or even as high as 50 percent or more than they would be if there were very small (1 to 4 percent) annual increases. After all, most people’s incomes

increase slowly year-to-year and not in big jumps every few years, so why should things they pay for, like water service, jump in price suddenly and unpredictably?

Which rate structure is right for your community?

No one rate structure is inherently better than another. Any rate structure can be priced to allow you to collect the correct amount of revenue. Here are a few issues that should be kept in mind as you determine which rate structure is best for your community:

- **Rates must be set at a level that covers *all* of the costs to produce, treat, store, and distribute water to all current *and future* customers.** These functions include other parts of a "business" that are not so visible—replacing assets, servicing debt, funding financial reserves, and other operations, maintenance, and administrative costs, including those associated with regulatory compliance.
- **Rates must be fair and equitable.** Fair means that they are high enough to cover all costs of operating the system. Equitable means that each class (or type) of customer is paying what is rightfully its share of the costs.
- **A water system's revenues *must not* be used to pay for other services.** Using water revenues for other purposes while not adequately maintaining financial reserves or fully funding maintenance needs will only increase the costs of operations in the long run. Governments should not use revenue from their water systems to subsidize general government programs. Likewise, the rates and revenues for drinking water should be separate from those for wastewater, stormwater, solid waste, or other public services.
- **Customers should know what the rates are.** This is a time when people demand transparency. Your rates should be posted publicly in the water or general office, on your website (if you have one), and/or comply with any other notification or approval requirements dictated by your state, territory, or tribal nation. The rate schedule should be sent to all customers at least once a year and every time there is an adjustment to the rates. The annual Consumer Confidence Report or CCR is a good time to remind customers about your rates and how system revenue is being spent.
- **The rate structure should be easy to understand.** In general, smaller systems (fewer than 5,000 users) should have between one and five user classifications and between one and three consumption blocks.
- **Water rates have a short life span.** The existing rate structure should be examined at least once a year as part of the budget-development process to determine if an adjustment needs to be made. If a dramatic change in income or expenses is experienced during the year, an analysis should be done to determine if an adjustment is necessary before the regular budgeting process.
- **Good rate structures are based on actual, accurate financial information and good customer records.** It's very difficult to develop a fair and equitable rate structure if you're not sure what your income and expenses have been for the last two to three years and how much water you are selling to each customer. The more detailed your budget and usage information, the more accurate your rate modeling will be.
- **The rate structure should be easy to administer.** If it is too complex, chances are it's going to be hard for customers to understand and support.

You need to make careful and thoughtful decisions that balance the needs of different segments of your customer base. For example, if you are trying to develop or attract industry, you might want to select a rate structure that is more favorable to large-volume users. However, you need to be aware of the impact that rate structure has on smaller commercial and residential users. Giving a break to one group of customers means the rest of the customers will need to pay more to cover all expenses.

You should also consider the need to conserve. If your water supply is abundant and your treatment costs are relatively low and will remain so even with meeting new drinking water regulatory standards, you might not view conservation as paramount. Most funding agencies do consider conservation in evaluating financing for new projects, so that will need to be kept in mind. Conservation can also help in maintaining your level of storage as well as avoiding peak power rates that some electrical companies charge. And some infrastructure funding programs give extra points or consideration to projects that promote conservation or to systems with a conservation plan in place.

Likewise, you should consider whether members of your customer base have difficulty affording your water service. The cost of water service is still below that of other utilities, including ones not necessary to sustain life. However, as water systems catch up on needed capital projects and as grants continue to be limited, across the country the price for water is rising faster than that of other utilities, faster than salaries, and faster than inflation. This can make water service less affordable *over time*, especially for customers who rely on Social Security or other retirement or disability income that may be fixed or pegged to inflation. Delaying needed rate increases can actually make this problem worse, as rates will have to rise sharply to cover past revenue shortfalls.

If your system is not metered and is using a uniform flat rate, it is strongly recommended that you install meters. If your system's meters are more than ten years old, you should formulate a plan to begin replacing the meters. Meters are the "cash register" of your system. As meters age, they tend to slow down and under-register the water flowing through them, and, as a result, your customers will receive more water than they will be billed for. If the meters are not reading accurately, you are losing revenue that your system needs in order to operate.

Overall, you will want to select a rate structure that is the most fair and equitable to all users and produces the revenue necessary to operate your system.

Money in the bank

A best practice for water systems is to maintain reserve funds—money in the bank. Water systems may wish to build up reserves for

- equipment replacement of short-lived assets such as pumps, meters, generators, and SCADA systems
- planned system expansions or improvements consistent with long-range capital needs
- local share of expansion and upgrade costs such as preliminary engineering reports (PERs) and required matches for infrastructure grants and loans
- emergency funds for unforeseen breakdowns, damage from natural disasters, and system repairs
- funds for unexpected revenue shortfalls from economic downturns, the loss of high-use customers, and other issues
- debt-service reserve funds that may be required by lenders. The debt service reserve is for making regular debt-service payments should other funds for making debt-service payments not be available

There are no nationally accepted standards for the amount of money that water systems should keep in the bank. Some states and territories have minimum or maximum guidelines for how much money can be set aside into reserves, and most utility commissions have separate guidelines for the systems they regulate. Additionally, some funders, like USDA, have reserve requirements for borrowers. Beyond what is required for debt service, you must decide what amount is most appropriate for your water system (for example, 90-180 days of operating expenses, or enough to replace all short-lived assets on a set schedule) and build that into the rates calculations. It is appropriate for the governing body of the water system to set an official policy for reserves. Governing bodies should also ensure that water system reserve funds are spent only on the water system and not on general fund or other fund needs.

Restricted and Unrestricted Reserves

Your money in the bank is divided between unrestricted and restricted reserves. Unrestricted reserves can be used for any expense—operations and maintenance, capital, or debt service. But certain types of reserve funds have restricted uses. For example, customer deposits should be held in a dedicated account and not used to cover any expenses. Debt covenants may require that the funds used for debt service coverage are held in a restricted account. And some states, territories, and tribal nations allow water systems to create a capital improvement fund that is restricted to infrastructure projects only. The proceeds of impact fees and system development charges should be restricted for capital projects only as well.

Charges to new customers

Typically, new customers incur two different types of charges: deposits and connection fees. Deposits are set and collected to ensure that if customers do not pay their bills, the system has money in reserve to cover expenses. Deposits should be set aside in an account so that the money can be refunded to customers if they discontinue service. Connection fees (also called tap fees, capital-improvement fees, subdivision fees, or development fees) are charged to a customer or group of customers to help the system cover the costs of capital improvements that have already been paid for or are being paid for by current customers or to cover the cost that the system will incur due to the additional connections. These fees are not refundable.

Determining which rate structure best meets community needs and setting reserve policies are two of the steps you should take before beginning a rate analysis. Chapter 2 outlines several other best practices to ensure that revenues are being spent as efficiently as possible and that future needs are identified properly.

Notes

Chapter 2: Ensuring that revenues are spent efficiently

The process in this guide focuses on measuring the adequacy of current rates to cover future costs. An important step in that process is to ensure that money isn't being wasted. You may have opportunities to spend your money more efficiently while maintaining the same level of service. Your system should be well-managed; customers should not have to pay for inefficiency and waste. Your board should be able to point out to customers all the ways you have streamlined operations and minimized expenses when you are explaining why a rate increase is needed—that you have done your work first before asking for more of your customers. In addition, before beginning a rates analysis, it is also important to know which capital projects are critical in the next 5 years. If you choose to engage a technical assistance provider to assist with your rates analysis, they can likely also help you with these asset management and capital improvement analyses as well.

Quick efficiency checks

Below are some quick efficiency checks that will help you manage your system better and that will probably help with your cash flow as well:

- **Customer billing:** Make sure that all meters are read and that bills are sent out in a timely manner.
- **Billing all users:** Do all customers that receive water from your system have a meter? If not, install them. Are all customers being billed? In some communities, hospitals, churches, and other governmental departments (police and fire departments, city parks, public buildings) receive water without charge. This is not a good practice, may not be legal, and is not fair to other users of the system. Are there customers that are stealing water? Illegal taps into the system, tampering with meters, bypassing meters, or taking water from hydrants to avoid paying are all theft. Establish and enforce stiff penalties. When your meter reader is out, make sure he/she is observant for signs of theft.
- **Paying your bills:** Avoid paying late-payment penalties, if possible. Postpone any large, non-essential purchases if you do not have enough money to cover current liabilities.
- **Put your money to work:** When money is collected, is it immediately deposited? Are your bank accounts earning the highest possible interest rate? Shop around for banking services, use more than one bank, and place reserves in higher-interest certificates of deposit or money market accounts. If allowed, you should be earning interest on your money.
- **Fees, deposits, surcharges:** Review your current fee and deposit policies to make sure they reflect the cost of providing services. Does your hook-up fee really cover the full cost of hooking up a new customer? Does your service-fee structure cover the extra cost of night and weekend work? Make sure all of your policies are in writing, and *always* treat customers equally.

Are we getting paid for every gallon we produce or purchase?

Not every gallon that is produced by your system or delivered to a customer is paid for. Minimizing these unpaid gallons will control costs and boost revenues without needing to raise rates. In preparation for a rate analysis, water systems should conduct a water audit and an evaluation of collections.

Water audits can be invaluable in controlling wasted water, thereby controlling costs. If you know how much water is coming from your treatment facility and you can determine how much water your customers are using, the difference between the two amounts is non-revenue water. Non-revenue water across the United States can range from around 5 percent to more than 50 percent at individual systems. Non-revenue water consists of two primary components—apparent water losses and real water losses. Systems are encouraged to conduct a water audit and to fix any discrepancies prior to making rate adjustments.

Apparent water losses are non-physical losses that occur due to customer meter inaccuracies, data-handling errors in customer-billing systems, and unauthorized consumption—water that is consumed but is not accurately measured, accounted for, or paid for. These losses cost your system revenue and distort data on customer use. Water audits can also identify and quantify unbilled, authorized consumption (such as for fire suppression).

Some corrections for apparent water losses are relatively inexpensive procedural changes, but those changes can pay off in a big way. If you compare your billing process with the expected income for the amount of water treated, you can identify shortcomings that can be remedied. Is water taken without the knowledge and authorization of the system (for instance, by street cleaners, construction water trucks, or others)? Do all of your customers have an active account in the billing system? Is meter reading accurate and complete? Look for illegal taps, reversed water meters, and other signs of water theft.

Meters that are under-reading are another cause of apparent water loss. In general, as meters get older, they slow down and do not read all of the water passing through them. Many water systems wait for meters to stop measuring water at all to replace them but having widespread meters across a system under-reading (even by 10 percent) can impact utility revenues significantly.

Real water losses are physical losses of water from the distribution system, including leakage and storage overflows. These losses inflate production costs and stress water resources—the water is pumped and treated, but never reaches your users, so you receive no revenue for it.

Many drinking water systems respond to real losses only after they have received a report of water erupting from a street or a complaint from a customer about a damp basement or poor pressure. If you use this type of reactive leakage response, your system will most likely have excessive leakage that will never be contained reliably. In fact, many leaks never reach the surface. Controlling leakage effectively relies upon a proactive leakage-management program, including a means to identify hidden leaks, optimize repair functions, manage excessive water-pressure levels, and upgrade piping infrastructure before its useful life ends.

Effective technologies have been developed in recent years, including flow and component analysis to quantify leakage amounts, equipment

to pinpoint leaks, and pressure management to help systematically reduce leakage. Automatic meter reading (AMR) and advanced metering infrastructure (AMI) systems may allow water systems to improve their efficiency and can help identify wasteful usage and leaks to help manage water and revenue losses.

Water Audit Resources

The International Water Association (IWA) and American Water Works Association (AWWA) Water Audit Method is the accepted industry standard for measuring non-revenue water. AWWA offers Free Water Audit Software© to all water systems to calculate non-revenue water. This Excel tool is available for download at: https://www.awwa.org/Resources-Tools/Resource-Topics/Water-Loss-Control

Also, customers don't necessarily pay you for every gallon the meter reads. Improving a system's bill **collection rate** is another way to increase revenue without raising rates. Your water system should have written customer service policies regarding when bills are considered past due, when disconnections will occur due to non-payment, and what penalties will be assessed. If your collection and shut-off policies are not being strictly enforced, your system is losing revenue. The customers who pay on time are subsidizing late payers, which isn't fair. If you have a large amount of accounts receivable, you should consider reducing the amount of time that customers are given to pay their bills. Also, your penalty for late payments is perhaps not high enough to encourage customers to pay on time. Ideally, you should strive to have a 100 percent collection rate. Systems are encouraged to review collection policies and practices prior to making rate adjustments.

Water Loss and Wastewater

Because wastewater bills are often tied to water usage, apparent water loss—in particular, under-reading meters and theft—also negatively impact wastewater revenue. Replacing old and faulty meters can help with the long-term sustainability of both systems.

Are energy bills as low as possible?

For most water systems, energy is the largest cost related to the amount of water treated and sold. It is also a cost that can be controlled while still offering the same level of service. Before adjusting rates, systems are encouraged to determine whether they can achieve any cost savings through **energy management**. There are several steps that you can take to manage your system's energy costs:

- **Reduce real water loss.** As discussed above, real water losses include leakage and storage overflows. Energy is typically necessary to treat and distribute water, so reducing the amount of water that is produced but that never reaches customers lowers energy consumption and therefore lowers energy bills.
- **Install energy-efficient assets.** Energy efficiency involves using less electricity to achieve the same or better level of performance. The assets that use the most energy at most water systems are pumps, motors, and treatment technologies. By sizing these pieces of equipment properly and installing energy efficient models such as variable speed pumps, you can reduce your energy consumption. Lighting and HVAC systems in treatment plants and other buildings are another group of assets

to assess. Often a more energy-efficient asset will cost more to purchase but less to operate over its useful life, so be sure to consider life-cycle costs and not purchase prices alone when acquiring new assets. Inquire whether your electricity provider offers free energy audits, and take advantage if they do.

- **Ensure you are on the proper electric rate.** Often, electric providers have multiple rates and classes of customers. You can work with your electric utility representative to ensure that your system is on the most appropriate rate structure possible. Keep in mind that your system likely has several electricity bills. Take this opportunity to also ensure that all of your bills are on the same rate structure and that you are receiving the correct number of electricity bills each month.
- **Fill storage tanks during off-peak hours.** Many electric rates are structured to be higher during heavy times of demand, such as during the business day, and lower during lighter times of demand, such as overnight. If you pay these "time-of-use" rates, you could consider making changes to your operations so that energy-intensive activities take place during the lower cost times of day. For example, you may choose to pump water into your elevated storage tank at night instead of in the middle of the afternoon. This will not reduce your energy consumption at all, but if you have time-of-use rates or peak demand charges, it will reduce your energy bill.
- **Reduce energy purchases by generating electricity on-site.** Your water system can produce its own electricity on-site to reduce the need to purchase electricity from electric providers. Water systems can install renewable energy generation through solar photovoltaic (PV) panels and small-scale wind turbines. Some water systems also install turbines in their water lines, in particular near pressure-release valves, that can spin and generate electricity. Note, however, that the cost of these capital projects can be high, and governmental and non-profit water systems are likely not eligible for tax incentives used to lower purchase costs. Generating on-site electricity likely makes the most sense for water systems that pay high energy rates.
- **Promote customer water efficiency.** A final way to lower energy costs is for customers to lower their water consumption, which lowers pumping and treatment costs. Water systems can promote conservation through pricing strategies, though water-use restrictions, through programs to reduce outdoor water use, and through programs to incentivize low-flow fixtures and appliances. While promoting conservation may lower energy costs, it also could lower your system's revenue if you charge customers based on the volume of water they consume. You may find the energy savings do not completely offset the loss of revenue.

The RCAP Guide on Energy Audits and More

Sustainable Infrastructure for Small System Public Services: A Planning and Resource Guide

Rather than presenting theories, this guidebook provides information, worksheets, examples, case studies and resources on water conservation, energy efficiency and renewable-energy resources for small systems. This planning and resources guide includes a step-by-step process for system decision makers, staff and community members wanting to operate increasingly efficient water systems. It offers a flexible approach to evaluating sustainable alternatives for system operations. The guide is available at: https://www.rcap.org/resource/sustainable-infrastructure-for-small-system-public-services-a-planning-and-resource-guide/

Wastewater and Energy

Wastewater operations typically uses more energy than drinking water and is often the largest energy expense in small communities. There are often opportunities to install energy efficient controls for aerators, centrifuges, pumps, blowers, mixers, and UV systems. There may also be opportunities to run processes at different times of day to reduce peak-hour electricity usage. And there are opportunities to reduce the energy consumption of wastewater facilities through lighting controls and efficient HVAC systems.

Working together to increase efficiencies

As a small water system, you have to provide all of the same services as a larger water system, but you have fewer customers to help share in the cost. Water systems can often find efficiencies by working with other water systems through **regionalization**. It is becoming increasingly difficult to sustain small public water systems as regulations increase, infrastructure deteriorates, and operating costs increase. Before adjusting rates, systems are encouraged to explore whether regional arrangements would be fruitful.

Working together can increase efficiencies by eliminating duplicative services, add or improve services you can't afford to deliver on your own, and provide services more cost effectively. Regionalization can range from informal partnerships such as mutual aid agreements in case of an emergency or the sharing of heavy equipment, to more formal partnerships such as the formation of a Joint Powers Authority to develop a new water source or a full physical and/or managerial consolidation. Even an arrangement to purchase commonly used materials or chemicals in bulk can save all participating systems money. Regionalization is a good solution when existing and future water or natural resources need to be protected, your capacity to operate in a business-like manner is limited, funding capacity is limited, compliance is not attainable affordably, source redundancy is lacking, your staff and volunteers are burning out, or if there is an opportunity to create economies of scale.

Lessons Learned on Regionalization from Community Leaders

RCAP's report "Resiliency Through Water and Wastewater System Partnerships: 10 Lessons from Community Leaders" looks at community utility partnerships from a rural and tribal perspective. As small communities across the country seek solutions for common economic, operational and compliance challenges, this research highlights the experiences of those who chose water and/or wastewater system partnerships as a solution. Some systems are collaborating to build capacity and become more resilient, enabling them to successfully sustain their systems not only financially, but technically and managerially, for years to come. The report highlights 10 lessons from community leaders who undertook and facilitated regional collaboration, also called regionalization, projects – the successes they saw, the challenges they overcame, and the difficult questions they faced throughout the process. You can access the report here: https://www.rcap.org/blog/regionalizationresearch/

Are we getting the longest useful life out of our assets?

Your water system is made up of many capital assets, including wells and other water sources, treatment technology, storage tanks, pumps, valves, pipelines, hydrants, meters, vehicles, and buildings. All of these assets will eventually need to be replaced. And unless your system is able to obtain grants, your customers will be paying for the replacement, either through current revenues, debt, or reserve funds. The rates you charge should cover not only the cost of your daily operations but the cost of replacing assets as well.

For smaller water systems, replacing capital assets can be challenging because there are not as many customers to share in the cost. But having fewer customers does not necessarily mean less infrastructure. Small systems may be geographically spread out. Fire flow requirements may necessitate having more infrastructure than would be necessary for domestic water use only. And there is a minimum amount of infrastructure needed to comply with Safe Drinking Water Act requirements regardless of the number of people served. As a result, it is important that small communities like yours get the longest useful life out of your assets. Replacing an asset too early means that you have not gotten the maximum value out of your infrastructure investment. Replacing an asset too late often results in increased maintenance costs and risks disrupting service or endangering public health. You have to find the sweet spot, and asset management can help.

Asset management is a comprehensive, integrated process for maintaining system infrastructure assets and equipment for the most effective, least-cost allocation of resources, in order to *sustain* the water system over time. True asset management looks at each piece of equipment in a big-picture, "whole life" way that includes planning, financing, assessing risks, maintaining it, record-keeping and prioritizing replacement. Asset management may seem time-intensive and costly, but it is a long-view investment that has helped many communities save money over time. By being proactive versus reactive and not waiting until something breaks to replace it, systems are often able to provide more affordable, reliable service with fewer negative impacts for customers.

To do this requires asking and answering five critical "core" questions, identified by the U.S. Environmental Protection Agency:

- What are my assets, and what condition are they in?
- What are my sustainable level-of-service goals?
- What assets are most critical in achieving those goals?
- What are the minimum life-cycle costs of those critical assets?
- What is the best long-term funding strategy?

Ideally, before adjusting rates, systems are encouraged to go through the process of asset management to identify the infrastructure that will need to be replaced in at least the next five years. But asset management isn't a wish list. The process assumes that you do not have enough money to do all of the capital projects you wish, so it helps to identify which projects are most critical to maintain compliance and to maintain your level of service. Not all capital assets are equally important to your system, obviously. The meter at one customer's house failing is not as detrimental as your primary storage tank failing. Those most critical capital replacements will need to be factored into any rate adjustment you make.

If you do not have time to undergo the full asset management process, at the very least you should make a list of your water system's assets (also referred to as an asset inventory), identify any that will need to be replaced in the next five years, and determine whether you will pay for their replacement with debt, with current revenues, or with reserve funds. You will need this information when you calculate the amount of money your rates need to generate each year.

Asset Management Resources

The U.S. Environmental Protection Agency maintains a series of free guidebooks and tools related to asset management, including Asset Management: A Handbook for Small Public Water Systems, which is part of their Simple Tools for Effective Performance (STEP) Guide Series and is geared towards small systems. The EPA resources are available at: https://www.epa.gov/sustainable-water-infrastructure/asset-management-water-and-wastewater-utilities

In addition, the Southwest Environmental Finance Center has partnered with EPA to create a repository of documentation and tools related to Asset Management for water and wastewater systems called the Asset Management Switchboard. The Switchboard is available at: https://swefcamswitchboard.unm.edu/am/

Now that you have assessed whether there are any efficiencies to be gained in your current operations, the next step is to determine whether your current rates are sufficient to cover your costs over the next several years. Chapter 3 will explain how to project your costs and revenues over time.

Notes

Chapter 3: Is it time for a rate increase?

Each year, water systems should examine their rates. The following questions can help you decide if a rate adjustment is needed:

- Did your system's revenues exceed expenses in each of the last three years?
- Were you able to make all scheduled payments on your long-term debt?
- Are you fully funding reserve accounts?
- Were you able to cover the cost of emergency and preventative maintenance as needed?
- Is your system in compliance with your primacy agency's drinking water standards and regulations?
- Have you had a rate increase in the last three years?

The best way to answer these questions is to prepare a **financial forecast**, and if any of the answers are "no," it may be time to make rate adjustments. A financial forecast looks at your expected revenues and expenses over the next three to five years, including operations, debt payments, capital outlays, and contributions to reserve funds. The financial forecast will determine whether your current rates will be sufficient to cover the full and true costs of running the water system. The first step in the financial forecast is to gather the appropriate data.

Anytown, U.S.A.

City of Anytown, USA

Introduction

Throughout this guide, we will use the City of Anytown, USA for our calculations. While the name of the community is obviously made up, the numbers are accurate for a small system of its size. Here are some basic facts about Anytown:

- Serves 1,580 people
- 580 service connections
- Charges uniform rates monthly, with a $13.65 base rate and $3.75 per 1,000-gallon flow rate
- All customers are on the same base rate and flow rate
- Rates have not changed in the past three years
- Collection rate is 98 percent
- Sold between 31 million and 35 million gallons per year over past three years
- The median household income for the community is $31,085
- Has unrestricted reserves to cover any operations and maintenance, capital, or debt service cost
- Has restricted reserves for required debt service coverage and for customer deposits

Gathering data

To complete the financial forecast, you will need to gather the following data:

- Actual end-of-year revenues and expenses from at least the past 2 to 3 fiscal years. You may find this information on audited financial statements or from budgets if you record actuals at the end of the fiscal year. Ideally, do not use budgeted amounts as they may not reflect the actual costs you incurred and the actual revenues you received, though comparing budgeted amounts to actual amounts will help you see the accuracy of your budgets.
- A year-to-date financial report that shows revenues and expenses in this fiscal year.
- End-of-year restricted and unrestricted reserve balances from at least the past 2 to 3 years, including funds for operations, for contingencies or emergencies, for required debt service reserves, and for capital projects.
- Capital improvement plan or list of scheduled capital improvements in the next 2 to 3 years.
- Any current debt agreements.
- Rate schedules and their effective dates from at least the past 2 to 3 years.
- Number of customers / bills and total amount of water sold (gallons or cubic feet) in at least each of the past 2 to 3 years.
- Count of customers by level of usage per billing period (for example, 0-1,000 gallons of use, 1,001 to 2,000 gallons of use, etc.).
- List of any operational or financial abnormalities from the past 2 to 3 years that would greatly impact financial analysis (non-typical revenue and expenditures).
- Any compliance letters/documents from your primacy agency that you are attempting to resolve.

Separating Out Different Services

As you begin the process of collecting income and expense data from the past few years, you may discover that multiple services—water, wastewater, stormwater, and solid waste—may be lumped together into a single budget. But each service should be self-sufficient, so if that is the case, it will be necessary to separate them out in order to conduct the financial forecast. Some expenses will clearly be for one service or another. For less obvious expenses, like salaries of staff shared across multiple services, divide them based on the percentage of time they spend on each service. Your technical assistance provider can help you with this separation process. You may need to separate out the financials for the various services in order to apply for funding from USDA and other programs.

Your budget actuals and financial statements contain many of the costs of running your system, but do they include all of the costs associated with being sustainable over time? If not, this is a good time to make that correction. A few examples of hidden costs that may not be directly paid by the water system are:

- The salaries of a clerk or other administrative employees. At least a portion of those salaries should be allocated to the system based on the percentage of time that employee spends on the water system vs. other job functions.
- A portion of the expenses related to the elected body—salaries or stipends, meeting expenses, the cost of elections—in proportion to the time the board spends on the water system vs. other services and programs.

- Office expenses, such as rent, utilities, supplies, etc. At least a portion should be allocated to the utility.
- Insurance: The portion of the premium that covers any property of the system, liability for the system, or employees of the system should be allocated to the water system.
- Professional services, such as accounting, auditing, legal, or any others, should have a portion allocated to the water system.
- Any other services, such as lawn mowing, snow removal, etc., that benefit the system should have a portion allocated to the water system.

Hopefully, your water system already has all of the documents necessary for the financial forecast, in particular an annual budget for the water system alone. Your state, territory or tribal nation, or your public funding source for your infrastructure, may require one. A budget is a plan for organizing and managing your system's financial operations. It is important to track actual income and expenses and compare that information with your budget on a regular basis. If you don't know that your income and/or expenses are off from what you budgeted (planned) until after the budget year is completed, you can't adjust spending as needed during the year, and you cannot accurately forecast your revenues and expenses as part of your rates analysis. Don't let the meeting at which you adopt the budget be the last time you look at it for a year. The budget should be reviewed by your board or council on a monthly or at least a quarterly basis. Your budget is your plan, and the only way a plan will work is if you follow the plan. If you engage a technical assistance provider, they can help you develop a budget. The income and expense worksheet in this chapter can serve as a template.

The operating revenues you should include in your projections are:

- Water sales: base rate and flow rate
- Fees customers pay to connect to the system
- Penalties
- Any membership fees

In addition, you should include any unrestricted, non-operating revenue such as interest on bank accounts, revenue from the sale of equipment, revenue from leasing water tower space for cell phone or radio receivers, and debt proceeds if you borrow money.

The operating expenses you should include in your projections are:

- Salaries and fringe benefits (health care, retirement, etc.) for anyone within your organization who works for/with the water system, in proportion to the level of effort they work with the system
- Supplies and chemicals needed for water treatment and operations
- Electricity and other utilities paid by the water system
- Insurance costs on the system
- Contracted labor for operations
- Regular repairs and system maintenance, including spare parts
- Taxes, or payment in lieu of taxes, if applicable
- Fuel and oil costs for vehicles and heavy machinery
- Telephone and mobile phone costs
- Write-offs of unpaid bills ("bad debt expense")
- Contracted legal and accounting services

- Postage for mailing bills to customers and other correspondence
- Office expenses
- Conference fees, course fees, and other continuing education expenses
- Uniforms and other employee equipment
- Water testing and analysis laboratory fees
- Vehicle maintenance and upkeep
- Bank charges
- Miscellaneous expenses
- Any other cost incurred in the operation of your water system

Also, your projections should include non-operating expenses such as capital outlays, principal and interest payments on long-term debt, and contributions to reserves.

Financial Basics Explained

Not sure if your budget is comprehensive? Need to differentiate between balance sheets, income statements and cash-flow statements? RCAP's *The Basics of Financial Management for Small-community Utilities* is a primer on financial management. *The Basics* guide covers key parts of financial reports and a lot more. It discusses the importance of solid, effective financial management of a water system—developing a system that is financially sustainable. The guide is available for download at: https://www.rcap.org/resource/basics-of-financial-management-guidebook/

Page **26** shows the End-of-Year Revenues and Expenses Table. The top portion of the table includes operating revenues and then operating expenses. These are the costs of running the water system day-to-day. The bottom portion of the table includes other revenues and expenses, such as those related to capital assets and debt. Column A shows the revenue or expense category. The table then includes actual end-of-year revenues and expenses in Columns B-D from three consecutive fiscal years.

You may not have consistent line items in your budget year-to-year, especially if you have had different personnel prepare the budget each year. You may need to take some time to reorganize the budgets for each fiscal year into the same categories before entering data into the table. That way, you are making an apples-to-apples comparison across multiple years.

Total up the operating revenues and operating expenses for each year, and subtract expenses from revenues to get net operating income or losses. Then add up the other income and expenses for each year, and add that to the net operating income. This gives you your net income or loss for each year. These numbers show you whether you are covering operating expenses and all expenses with your revenue.

The bottom two rows contain information about your unrestricted reserve funds. Add the net income for each year to the Unrestricted Reserves at Beginning of Year row to get the Unrestricted Reserves at End of Year total. The Unrestricted Reserves at End of Year for one fiscal year becomes the Unrestricted Reserves at Beginning of Year for the next fiscal year. This shows you changes in your unrestricted reserve funds over time. Note any patterns in changes to unrestricted reserve fund balances, such as a reduction in unrestricted reserves each year to cover operating expenses.

In columns E and F, the differences among the three fiscal years are calculated to determine the growth or decline in the previous years' budget numbers. Column E expresses the difference in dollars (Column D minus Column B), and Column F expresses the difference as a percentage (Column E divided by Column B). This shows you the trend for your income and expenses over time. Note any years with unusual revenues or expenses. These atypical years can create issues with your projection. You may wish to exclude them from these calculations.

If you do not have a template to show budget actuals over multiple years, you can use this example table for your water system. Simply adjust the line items to match your budgets and financial statements and add your own data. A copy of the blank spreadsheet is available in the Excel tables download file that accompanies this guide. Your technical assistance provider can help you compile your actual revenues and expenses. And remember, this table should show data for the water system only. It should be separate from any general functions of your government or organization, and it should be separate from other services such as wastewater, stormwater, and solid waste.

Anytown, U.S.A.

Explanation of Example—City of Anytown, USA

End-of-Year Revenues and Expenses Data

The table on page **27** shows Anytown's actual revenues and expenses from three consecutive fiscal years—2018, 2019, and 2020.

Over the three-year period, operating revenues declined a little while operating expenses increased. Anytown generated positive net operating income in all three years. But Anytown's debt payments and capital outlays exceeded their net operating income and other income, meaning they had to dip into their unrestricted reserve funds to cover all expenses. Over the three-year period, the total unrestricted reserves for Anytown dropped by nearly 90 percent. Anytown did not make any contributions to unrestricted reserves over the three-year period. Note that these calculations exclude Anytown's restricted reserves for debt service coverage and for customer deposits.

End-of-Year Revenues and Expenses Table

A	B	C	D	E	F
Operating Revenue	**Actual Yr 1**	**Actual Yr 2**	**Actual Yr 3**	**3-yr Diff + or –**	**% Diff 3-year period**
Water Sales					
Misc. Construction & Meter Conn.					
Service Charges & Misc. Income					
Total Revenue					

Operating expenses

Salaries & Fringe Benefits					
Service Supplies					
Electricity & Utilities					
Insurance					
Contract Labor					
System Repair & Maintenance					
Taxes & Licenses					
Fuel & Oil					
Telephone					
Bad-debt Expense					
Legal & Accounting					
Miscellaneous					
Postage					
Office Expenses					
Continuing Education					
Uniforms					
Testing & Analysis					
Truck Expense					
Bank Charges					
Total Operating expenses					

NET Operating Income (LOSS)					

Other Income & expenses

Interest Income					
Gain on Sale of Equipment					
Principal and Interest Payments on Long Term Debt					
Capital Outlay					
Total Other Income & Expenses					

NET Income (LOSS)					

Unrestricted Reserves at Beginning of Year					
Unrestricted Reserves at End of Year					

RCAP

End-of-Year Revenues and Expenses Table for **Anytown, USA**

A	B	C	D	E	F
Operating Revenue	**Actual 2018**	**Actual 2019**	**Actual 2020**	**3-yr Diff + or –**	**% Diff 3-year period**
Water Sales	219,342	215,919	210,199	(9,143)	-4%
Misc. Construction & Meter Conn.	2,400	5,550	5,300	2,900	121%
Service Charges & Misc. Income	5,286	9,642	6,750	1,464	28%
Total Revenue	**$227,028**	**$231,111**	**$222,249**	**($4,779)**	**-2%**
Operating expenses					
Salaries & Fringe Benefits	88,471	96,989	100,959	12,488	14%
Service Supplies	20,121	26,549	25,231	5,110	25%
Electricity & Utilities	24,006	22,486	21,651	(2,355)	-10%
Insurance	2,176	2,646	2,406	230	11%
Contract Labor	19,952	17,258	27,676	7,724	39%
System Repair & Maintenance	16,024	6,549	20,665	4,641	29%
Taxes & Licenses	1,579	1,622	1,474	(105)	-7%
Fuel & Oil	1,430	1,280	1,164	(266)	-19%
Telephone	1,825	2,347	2,134	309	17%
Bad-debt Expense	792	213	194	(598)	-76%
Legal & Accounting	8,308	2,347	2,134	(6,174)	-74%
Miscellaneous	70	299	272	202	289%
Postage	1,404	2,219	2,018	614	44%
Office Expenses	1,055	2,219	2,018	963	91%
Continuing Education	702	256	233	(469)	-67%
Uniforms	246	256	233	(13)	-5%
Testing & Analysis	2,201	2,689	2,444	243	11%
Truck Expense	421	341	310	(111)	-26%
Bank Charges	44	43	39	(5)	-11%
Total Operating expenses	**$190,827**	**$188,608**	**$213,255**	**$22,428**	**12%**
NET Operating Income (LOSS)	**$36,201**	**$42,503**	**$8,994**	**($27,207)**	**-75%**
Other Income & expenses					
Interest Income	1,928	717	801	($1,127)	-58%
Gain on Sale of Equipment	9,500	0	0	($9,500)	-100%
Principal and Interest Payments on Long Term Debt	(126,753)	(116,249)	(118,865)	$7,888	-6%
Capital Outlay	(94,447)	0	0	$94,447	-100%
Total Other Income & Expenses	**($209,772)**	**($115,532)**	**($118,064)**	**$91,708**	**-44%**
NET Income (LOSS)	**($173,571)**	**($73,029)**	**($109,070)**	**$64,501**	**-37%**
Unrestricted Reserves at Beginning of Year	**$382,702**	**$209,131**	**$136,102**	**($246,600)**	**-64%**
Unrestricted Reserves at End of Year	**$209,131**	**$136,102**	**$27,032**	**($182,099)**	**-87%**

Projecting changes in revenue over time

The next step in the financial forecast process is to determine whether your *current* rates will generate enough revenue to cover expenses in the next three to five years. Both revenues and expenses change over time. Your projection is a guess—none of us can predict the future. But by using data, you can have a more educated guess. The financial forecast is meant to measure whether your current rates will be adequate to cover future expenses.

Obviously, you would expect revenues to go up some if you have raised rates. But even if you have not raised rates, you may see revenues changing year-to-year. The three factors that most impact revenues are:

- The number of customers that receive a bill for a base rate each year
- The volume of water your meters register each year
- The number of customers that pay their bills on time and in full

The majority of your revenue will likely come from your water sales, and you will need to calculate revenue from the base rate and the flow rate separately. The formula for calculating revenue from the base rate is:

Number of Customers × Base Rate × Billing Periods × Collection Rate

Here, you will need to estimate both the number of customers you will have over the next three to five years and what your collection rate will be. Is your community growing, shrinking, or remaining stable? How many residential and commercial units around town are vacant? These factors impact the number of customers you charge each billing period. You will have to run this calculation multiple times if you have separate customer classes or if you vary the base rate based on the meter size.

The formula for calculating revenue from the flow rate is:

$$\frac{\textit{(Volume of Water Charged to Customers per Year} \times \textit{Flow Rate} \times \textit{Collection Rate)}}{\textit{(1,000 gallons or 100 cubic feet (CF)/100 cubic meters (CM))}}$$

Remember, because of non-revenue water, this calculation is based on gallons or cubic feet/cubic meters of water *sold*, not on the amount of water produced. And if you include a certain amount of usage in the base rate, be sure to remove it from the total.

There are a number of factors that can impact the amount of water you sell, in addition to changes in the number of customers you are serving:

- Changes in the number of large users such as commercial, industrial, agricultural, or institutional customers
- Changes in economic conditions within the community and across the country
- Rainy weather, causing people to reduce outdoor irrigation
- Drought conditions, causing people to irrigate more, or causing your system to institute usage restrictions

- Meter under-reads, which reduce bills but not your water production (apparent water loss), including the percent of meter inaccuracy, if known

And, in general, per capita water usage has been declining in the United States for decades. This is mostly driven by technological changes—more efficient toilets, faucets, showerheads, and appliances.

Other types of revenue, such as connection fees, penalties, and interest, can be projected using historical trends.

Projecting changes in expenses over time

In general, the costs of goods and services your water system purchases go up every year. This concept is known as inflation. Likewise, for most water systems, salaries also increase every year. You may assume, then, that all of your operating expenses are constantly increasing. But that may not necessarily be the case. Your expenditures depend both on the price of whatever you spend money on and the quantity consumed. So, if you are fixing water leaks or reducing energy use, as described in Chapter 2, you may see your total cost of energy go down even if the price of energy is steady or even if it is going up. Likewise, you may have a long-time operator retire and be replaced by a new, younger operator with a lower salary. Overtime or contract labor may go up or down each year depending on your staffing level and how many emergencies you have.

And even if the costs of different items are going up, they may be increasing at different rates. For example, while salaries and health insurance costs generally both increase over time, health care costs may increase faster than salaries.

You may project operating expenses using a simple multiplier for all expense line items based on historical trends. This provides a close enough estimation for total operating expenses over time, but for the reasons discussed above, these projections are less accurate than those based on projections made on each individual line item. The revenue and expenses table includes columns that look at how amounts have changed over the three-year time horizon for each line of the budget. These historical trends can help you make guesses about how individual expenses will change over time. Your technical assistance provider is an important resource in making these projections.

Whether you project all operating costs with one number or each line item individually, the formula for calculating changes in operating expenses is:

Expense Base Number × (1+ Rate of Change)

The expense base number can either be the figure from the last full fiscal year or perhaps an average of the past 3 to 5 fiscal years. What is important is that the number comes from a representative year. If your last fiscal year included an unusual occurrence—say a natural disaster or global pandemic—you may wish to choose a different year or an average of years for your projection.

The cost of infrastructure rehabilitation and replacement is also not static. Projects are completed on a planned or as-needed basis and are paid for by a mix of current revenues, reserve funds, and debt. The particular slate of capital projects and the funding source will vary each year, having an impact on non-operating expenses. Rather than using a formula, these expenses should be projected based on your capital improvement plan and your existing or anticipated debt agreements. If you have not developed a capital improvement plan, your technical assistance provider can help you identify which projects will be most critical in the coming years.

Are your current rates adequate for the future?

Page **32** contains the Financial Forecast Table. In Column A, put the same line items as you had on the End-of-Year Revenues and Expenses Table. Column B is your base year—either your last fiscal year or an average of the last few fiscal years.

The top of the table has fields related to your current rate structure: your current base rate, your current flow rate, and your current annual billing periods (monthly billing would be 12, for example). These fields are constant throughout the projection. There are additional fields for your number of customers, gallons sold, and collection rate in the base year. You can adjust these fields in each of the projection years based on a multiplier. The Water Sales for each of the three projected years are calculated from these numbers.

The remainder of the operating revenues, the operating expenses, and the Interest Income and Sale of Equipment in other income and expenses can all be projected using a multiplier. Finally, the capital outlays and principal and interest payments on long-term debt should be based on planned or current projects and debt.

Just as with the end-of-year revenue and expenses table, total up the operating revenues

Anytown, U.S.A.

Explanation of Example—City of Anytown, USA

Financial Forecast Data

The table on page **33** shows Anytown's projected revenues and expenses for the next three fiscal years.

Anytown anticipates retaining the same number of customers over the next three fiscal years and maintaining their 98 percent collection rate. Their debt service remains unchanged over the next three years, and they have one capital project slated for the second year, which they plan to pay for using reserves.

Over the previous three fiscal years, Anytown's water use has been trending downward, about 5 percent per year. That is reflected in the financial forecast, and as a result, their expected revenue from water sales is down. At the same time, many of their operating expenses were trending upward, and overall operating expenses have been increasing about 4 percent per year. While some line items are trending up and others trending downward, the 4 percent per year increase overall produces a close enough estimation of future operating expenses.

Anytown will not be able cover its operating expenses with operating revenues over the next three years, and revenues will not be sufficient to also cover their debt service and capital outlays. Because their unrestricted reserve funds had been depleted over the past three fiscal years, Anytown will not have enough money to cover all of its expenses just one year from now. They will need to find ways to cut costs, raise revenues, or both.

and operating expenses for each year, and subtract expenses from revenues to get net operating income or loss. Then add up the other income and expenses for each year, and add that to the net operating income. This gives you your net income or loss for each year. These numbers show you whether you are covering operating expenses and all expenses with your revenue.

The bottom two rows contain information about your unrestricted reserve funds. Add the net income for each year to the Unrestricted Reserves at Beginning of Year row to get the Unrestricted Reserves at End of Year total. The Unrestricted Reserves at End of Year for one fiscal year becomes the Unrestricted Reserves at Beginning of Year for the next fiscal year. This shows you changes in your reserve funds over time.

The bottom lines of the table are the bottom line—will your current rates provide enough revenue for you to cover operating expenses, capital outlays, and debt service in the next three years? And what will be the impact to your unrestricted reserve funds? If you find that the current rates are not sufficient, a rate adjustment will be needed. That process is covered in Chapter 4.

Financial Forecast Table

A	B	C	D	E	F
Projected Operating Revenue	**Base Year**	**Multiplier**	**Base Year +1**	**Base Year +2**	**Base Year +3**
Current Base Rate					
Current Flow Rate (per 1,000 gallons)					
Current Annual Billing Periods					
Expected Total Customers					
Expected Total Gallons Sold					
Expected Collection Rate					
Water Sales					
Misc. Construction & Meter Conn.					
Service Charges & Misc. Income					
Total Projected Operating Revenue					

Projected Operating Expenses

Salaries & Fringe Benefits					
Service Supplies					
Electricity & Utilities					
Insurance					
Contract Labor					
System Repair & Maintenance					
Taxes & Licenses					
Fuel & Oil					
Telephone					
Bad-debt Expense					
Legal & Accounting					
Miscellaneous					
Postage					
Office Expenses					
Continuing Education					
Uniforms					
Testing & Analysis					
Truck Expense					
Bank Charges					
Total Projected Operating Expenses					

Projected NET Operating Income (LOSS)					

Projected Other Income & Expenses

Interest Income					
Gain on Sale of Equipment					
Principal and Interest Payments on Long Term Debt					
Capital Outlay					
Total Projected Other Income & Expenses					

Projected NET Income (LOSS)					

Projected Unrestricted Reserves at Beginning of Year					
Projected Unrestricted Reserves at End of Year					

RCAP

Financial Forecast Table for **Anytown, USA**

A	B	C	D	E	F
Projected Operating Revenue	**Base Year**	**Multiplier**	**Base Year +1**	**Base Year +2**	**Base Year +3**
Current Base Rate	$13.65				
Current Flow Rate (per 1,000 gallons)	$3.75				
Current Annual Billing Periods	12				
Expected Total Customers	580	0%	580	580	580
Expected Total Gallons Sold	31,225,355	-5%	29,664,087	28,180,883	26,771,839
Expected Collection Rate	98%	0%	98.0%	98.0%	98.0%
Water Sales	210,199		202,119	196,669	191,490
Misc. Construction & Meter Conn.	5,300	10%	5,830	6,413	7,054
Service Charges & Misc. Income	6,750	10%	7,425	8,168	8,985
Total Projected Operating Revenue	**$222,249**		**$215,374**	**$211,250**	**$207,529**
Operating expenses					
Salaries & Fringe Benefits	100,959	4.0%	104,997	109,197	113,565
Service Supplies	25,231	4.0%	26,240	27,290	28,382
Electricity & Utilities	21,651	4.0%	22,517	23,418	24,355
Insurance	2,406	4.0%	2,502	2,602	2,706
Contract Labor	27,676	4.0%	28,783	29,934	31,131
System Repair & Maintenance	20,665	4.0%	21,492	22,352	23,246
Taxes & Licenses	1,474	4.0%	1,533	1,594	1,658
Fuel & Oil	1,164	4.0%	1,211	1,259	1,309
Telephone	2,134	4.0%	2,219	2,308	2,400
Bad-debt Expense	194	4.0%	202	210	218
Legal & Accounting	2,134	4.0%	2,219	2,308	2,400
Miscellaneous	272	4.0%	283	294	306
Postage	2,018	4.0%	2,099	2,183	2,270
Office Expenses	2,018	4.0%	2,099	2,183	2,270
Continuing Education	233	4.0%	242	252	262
Uniforms	233	4.0%	242	252	262
Testing & Analysis	2,444	4.0%	2,542	2,644	2,750
Truck Expense	310	4.0%	322	335	348
Bank Charges	39	4.0%	41	43	45
Total Projected Operating Expenses	**$213,255**		**$221,785**	**$230,658**	**$239,883**
Projected NET Operating Income (LOSS)	**$8,994**		**($6,411)**	**($19,408)**	**($32,354)**
Projected Other Income & Expenses					
Interest Income	801	-10%	721	649	584
Gain on Sale of Equipment	0	0%	0	0	0
Principal and Interest Payments on Long Term Debt	(118,865)		(118,865)	(118,865)	(118,865)
Capital Outlay	0		0	($88,374)	0
Total Projected Other Income & Expenses	**($118,064)**		**($118,144)**	**($206,590)**	**($118,281)**
Projected NET Income (LOSS)	**($109,070)**		**($124,555)**	**($225,998)**	**($150,635)**
Projected Unrestricted Reserves at Beginning of Year	**$126,161**		**$39,072**	**($85,483)**	**($311,481)**
Projected Unrestricted Reserves at End of Year	**$39,072**		**($85,483)**	**($311,481)**	**($462,116)**

Notes

Chapter 4: Adjusting the base and flow rates

There is a **financial target** you need to reach each year to cover all of your projected future expenses. After completing the financial forecast in Chapter 3, you may find that your current rates are not sufficient. If there are not ways to reduce your expenses, you will need to raise your revenues instead. But there are multiple ways to get to that target—you have a few options to consider!

Calculating your financial target and revenue needs

Your annual financial target includes three items discussed in Chapter 3:

- Your annual operating expenses
- Your annual principal and interest payments on long-term debt
- Your annual capital outlays

There is one more element to include—how much money you want in unrestricted reserve funds at the end of the year. As discussed in Chapter 1, having money in the bank allows water systems to pay for capital and to cover emergencies or unexpected revenue shortfalls. Reserves may also be required for systems with debt. While there is no accepted target for the amount of money to keep in reserves (beyond debt service coverage), you should have a goal for how much money you want in unrestricted reserves at the end of the year and set rates to meet that goal. Building unrestricted reserves is an important part of your financial responsibility—the goal should be a hard goal built into the rates, and not whatever is left over at the end of the year when other expenses are paid. Healthy unrestricted reserves are a necessity for water systems.

The Financial Target and Additional Revenue table on page **37** can be used to calculate how much money your rates will need to generate each year. First, pull over your operating expense, debt, and capital outlay numbers from the Financial Forecast worksheet and total them. Then, enter your unrestricted reserve target and your current unrestricted reserves for the first year, and subtract your current unrestricted reserves from the unrestricted reserve target. Note that it is possible to have a negative number if your current unrestricted reserves exceed your future target. Then add the total expenses to the unrestricted reserve need to calculate your funding target. Repeat the process for each successive year, noting that the unrestricted reserve target for one year becomes the current unrestricted reserves for the next year. For example, if your unrestricted reserve target for the first year is $50,000, your beginning unrestricted reserve balance in the second year is $50,000.

Next, pull over all of the revenue that is not from water sales from the Financial Forecast table—meter connection fees, service charges, interest income, and gains on sale of equipment—and total them. Subtract this number from the financial target to calculate the revenue needed from water sales. Then pull over the projected water sales from the Financial Forecast table and subtract them from the needed revenue. This gives you the additional revenue you will need to generate from water sales to cover all expenses and reserve targets.

Explanation of Example—City of Anytown, USA

Financial Forecast Data

The table on page **38** shows Anytown's financial targets for the next three fiscal years. Anytown has a capital project slated for the second year that they planned to pay for with unrestricted reserve funds. However, as was calculated in the End-of-year Revenues and Expenses Table, their unrestricted reserve funds have been depleted over the past three years to cover previous debt and capital expenses. Anytown has set an unrestricted reserve target in year 1 equal to the cost of the capital project, and an unrestricted reserve goal of $50,000 in the second year, and an unrestricted reserve goal of $100,000 in the third year, which equate to about 90 days and 180 days of operating costs respectively.

Based on those targets and on Anytown's projected expenses, Anytown's current rates are not sufficient to cover these future costs. Anytown's water sales will need to generate between $170,000 and $200,000 extra each year to cover all costs. This is a substantial amount. Current revenues from water sales are only slightly above $200,000. Anytown will need to raise its base rate, or its flow rate, or both. By not examining rates sooner and depleting unrestricted reserve funds to cover all of its expenses, Anytown finds itself in a difficult financial situation.

Facing this reality, Anytown could choose to pay for the capital project by borrowing money, which would help spread out the cost over time. It might also be tempted to delay its capital project and/or lower its unrestricted reserve targets, but that would not be in keeping with financial and managerial best practices. Anytown wants to follow the right path. The remainder of the guide shows how Anytown can pay for all of these necessary expenses to sustain the water system for years to come.

Financial Target and Additional Revenue Table

A	B	C	D
	Base Year +1	**Base Year +2**	**Base Year +3**
Total Projected Operating Expenses			
Principal and Interest Payments on Long Term Debt			
Capital Outlay			
Total Expenses			
Unrestricted Reserve Target			
Current Unrestricted Reserve Funds			
Additional Unrestricted Reserve Funds Needed			
Financial Target			
Misc. Construction & Meter Conn.			
Service Charges & Misc. Income			
Interest Income			
Gain on Sale of Equipment			
Total Revenue Other Than Water Sales			
Revenue Needed from Water Sales			
Projected Water Sales Under Current Rates			
Additional Revenue Needed from Water Sales			

Financial Target Table for **Anytown, USA**

A	B	C	D
	Base Year +1	Base Year +2	Base Year +3
Total Projected Operating Expenses	221,785	230,658	239,883
Principal and Interest Payments on Long Term Debt	118,865	118,865	118,865
Capital Outlay	0	88,374	0
Total Expenses	$340,650	$437,897	$358,748
Unrestricted Reserve Target	88,374	50,000	100,000
Current Unrestricted Reserve Funds	39,072	88,374	50,000
Additional Unrestricted Reserve Funds Needed	**$49,302**	**($38,374)**	**$50,000**
Financial Target	**$389,952**	**$399,523**	**$408,748**
Misc. Construction & Meter Conn.	5,830	6,413	7,054
Service Charges & Misc. Income	7,425	8,168	8,985
Interest Income	721	649	584
Gain on Sale of Equipment	0	0	0
Total Revenue Other Than Water Sales	**$13,976**	**$15,230**	**$16,623**
Revenue Needed from Water Sales	375,976	384,293	392,125
Projected Water Sales Under Current Rates	202,119	196,669	191,490
Additional Revenue Needed from Water Sales	**$173,857**	**$187,624**	**$200,635**

Adjusting your gallon allowance in the base rate

If your rate structure includes a usage allowance with your base rate, one option you have to raise revenue is to reduce or eliminate that allowance. For example, if you include 3,000 gallons of usage in your monthly base rate, you can reduce that allowance to 1,000 gallons or eliminate it entirely. If your customers continue to use the same volume of water, they will now pay for more gallons of their usage.

To calculate how much extra revenue you could receive from lowering or eliminating the gallon allowance, use this equation:

$$\frac{\textit{Gallons Reduced from Base Rate} \times \textit{Flow Rate} \times \textit{Annual Billing Periods} \times \textit{Collection Rate}}{\textit{(1,000 gallons or 100 cubic feet (CF)/100 cubic meters (CM))}}$$

Be conservative with your estimates. This equation assumes that users will not make any adjustments to their usage patterns once they start to pay for more gallons or cubic feet than they did before, which may not be true as customer bills go up. Often, systems raising rates see a small drop in usage initially, though usage may return to previous levels over time.

Adjusting your current base rate and flow rate

When additional revenues are needed from water sales, most water systems make incremental adjustments to their current rate structure. That rate structure is familiar to your customers, and you know your billing software can handle it.

These incremental changes can either be made to the base rate, to the flow rate, or to both. One strategy is to calculate covering the additional revenue needed from water sales with just an increase in the base rate and then calculating covering the additional revenue needed with just an increase in the flow rate. You can either choose one of these two options, or you can decide to raise both and know the range of those increases.

The formula for calculating how much your base rate will need to increase to cover all of the additional revenue needed is:

$$\frac{\textit{Additional Revenue Needed from Water Sales}}{\textit{(Customers} \times \textit{Annual Billing Periods} \times \textit{Collection Rate)}}$$

The formula for calculating how much your flow rate will need to increase to cover all of the additional revenue needed is:

$$\frac{\textit{Additional Revenue Needed from Water Sales}}{\textit{(Annual Gallons Sold} \times \textit{Collection Rate)}} \times \textit{1,000 gallons (or 100 CF/CM)}$$

If you wish to adjust both the base rate and the flow rate, it is possible to do the calculations by hand, but it is advisable to use a spreadsheet like the one provided in the Excel tables download file that accompanies this guide.

Some systems that raise rates don't always generate as much revenue as they anticipate. It is important to note that these calculations assume that your estimates for the number of customers, volume of water purchased, and collection rate are accurate. Obviously, as discussed above, a lot of factors—many out of your control—can cause these numbers to vary. But there is also some basic economics at work. As the price of a product like a gallon of water increases, customers tend to consume less of it if they can. The higher your rates, the lower you should expect your usage to be—to a degree. Regardless of price, there is a certain amount of water that each person requires to function in modern society. There is not a perfect relationship between price increasing and usage decreasing for drinking water. One rule of thumb is for every 10 percent increase in rates, you should expect usage to drop by about 3 to 4 percent. As a result, it is helpful to be conservative in your estimates about new revenue generated and to expect to have to continue to make rate revisions over time until you have found the correct numbers.

Anytown, U.S.A.

Explanation of Example—City of Anytown, USA

Rate Adjustment Data

The table on page **42** shows how Anytown's rates will need to change to meet its revenue needs. If Anytown were to change their base rate only, it would need to increase from $13.65 a month to $39.14 per month in the first year, then increase slightly in years 2 and 3 to $41.16 and $43.07, respectively. If Anytown were to change their flow rate only, it would need to increase from $3.75 per 1,000 gallons to $9.73 in year 1, $10.54 in year 2, and $11.40 in year 3.

To make up the additional revenue needed from water sales, Anytown can also adjust both the base rate and the flow rate. One option would be to increase the base rate to $25.00 per month for all three years, which would make the volumetric rate $7.55 in year 1, $8.29 in year 2, and $9.08 in year 3. Note that $25.00 is an arbitrary number, chosen because it falls between the current base rate and the maximum possible base rate.

All three of these rate structures will yield the same amount of annual revenue assuming that the anticipated number of customers, number of gallons sold, and collection rate are accurate.

Rates Adjustment Table

A	B	C	D
	Base Year +1	Base Year +2	Base Year +3
Current Base Rate			
Current Flow Rate (per 1,000 gallons)			
Current Annual Billing Periods			
Expected Total Customers			
Expected Total Gallons Sold			
Expected Collection Rate			
Additional Revenue Needed from Water Sales			

Increase from Base Rate Only:

New Base Rate ($/month)			
Existing Flow Rate ($/1,000 gallons)			

Increase from Flow Rate Only:

Existing Base Rate ($/month)			
New Flow Rate ($/1,000 gallons)			

Increases to Both Base Rate and Flow Rate:

New Base Rate ($/month)			
New Flow Rate ($/1,000 gallons)			

Rates Adjustment Table for **Anytown, USA**

A	B	C	D
	Base Year +1	Base Year +2	Base Year +3
Current Base Rate	$13.65		
Current Flow Rate (per 1,000 gallons)	$3.75		
Current Annual Billing Periods	12		
Expected Total Customers	580	580	580
Expected Total Gallons Sold	29,664,087	28,180,883	26,771,839
Expected Collection Rate	98.0%	98.0%	98.0%
Additional Revenue Needed from Water Sales	$173,857	$187,624	$200,635

Increase from Base Rate Only:

New Base Rate ($/month)	$39.14	$41.16	$43.07
Existing Flow Rate ($/1,000 gallons)	$3.75	$3.75	$3.75

Increase from Flow Rate Only:

Existing Base Rate ($/month)	$13.65	$13.65	$13.65
New Flow Rate ($/1,000 gallons)	$9.73	$10.54	$11.40

Increases to Both Base Rate and Flow Rate:

New Base Rate ($/month)	$25.00	$25.00	$25.00
New Flow Rate ($/1,000 gallons)	$7.55	$8.29	$9.08

Another approach: fixed and variable expenses

If you have to adjust your rates to increase revenue from water sales, you can also choose to make wholesale changes to your rates rather than incremental changes to the existing rate structure. A rates analysis is an opportunity to ask yourself why your rates are set the way they are. Were they calculated with a specific methodology in mind, or are they set the way they are because that's the way the rates have always been? You may find that you are making arbitrary adjustments to arbitrary rates.

One approach is to be intentional about what costs will be covered by the base rate and what costs will be covered by the flow rate. As discussed in Chapter 1, some costs of running a water system do not change based on how much water you treat and sell in a given year. These are known as "fixed expenses." Other costs are directly tied to the volume of water you treat and sell, and these are known as "variable expenses." One way to approach setting rates is to have the fixed expenses covered entirely by your base rate and the variable expenses covered entirely by your flow rate.

There are many opinions about what expenses should be considered fixed and what expenses should be considered variable, and determining them is not always going to be exact. A good rule of thumb is to consider expenses that you would have to pay even if your system never produced a single drop of water as fixed expenses and all expenses directly associated with producing and delivering water as variable expenses.

The most common variable expenses are:

- Service supplies, including chemicals, filters, and other items related to treatment
- Electricity and utilities
- Contract labor tied to operations
- System repair and maintenance, to a degree
- Purchase of bulk water for resale

Everything else is a fixed expense, including debt service and capital outlays. From your financial forecast, total up the lines that are fixed expenses and the lines that are variable expenses. Also add in your reserve funds needed from the financial target table as a fixed expense.

The formula for calculating how much your base rate will need to be to cover all fixed expenses is:

$$\frac{\textit{Total Annual Fixed Expenses}}{(\textit{Customers} \times \textit{Annual Billing Periods} \times \textit{Collection Rate})}$$

The formula for calculating how much your flow rate will need to be to cover all variable expenses is:

$$\frac{\textit{Total Annual Variable Expenses}}{(\textit{Annual Gallons Sold} \times \textit{Collection Rate}) \times 1{,}000 \text{ gallons (or 100 CF/CM)}}$$

If your system includes 1,000 or 2,000 gallons of water in the base rate, your base rate needs to include the cost of this water. The reason for including this cost is that there are operation and maintenance costs associated with producing the first 1,000 gallons just as there are costs to produce the second, third, or fourth thousand gallons. To include these costs in the base rate, multiply the variable expenses per 1,000 gallons (calculated above) by the number of units of water included in the minimum. Then add this number to the fixed cost per customer to determine the base rate.

Anytown, U.S.A.

Explanation of Example—City of Anytown, USA

Rates Based on Fixed and Variable Expenses

The table on page **45** shows what Anytown's rates would be if fixed expenses are covered by the base rate and variable expenses are fully covered by the flow rate. Over the three-year projection, Anytown's fixed expenses increase slightly from $290,920 in year 1 to $301,634 in year 3, which means the base rate will increase slightly over that time period. At the same time, variable expenses also increase slightly, but expected usage declines, meaning that the flow rate has to go up at a faster rate.

To cover all projected fixed expenses, Anytown's base rate would need to be $42.65 in year 1, increasing to $44.22 by year 3. To cover all projected variable expenses, the flow rate would need to be $3.41 in year 1, increasing to $4.08 in year 3.

Rates Based on Fixed and Variable Expenses Table

A	B	C	D
	Base Year +1	Base Year +2	Base Year +3
Fixed Operating Expenses			
Principal and Interest Payments on Long Term Debt			
Capital Outlay			
Additional Reserve Funds Needed			
Total Fixed Expenses			

Total Variable Expenses			

Expected Annual Billing Periods			
Expected Total Customers			
Expected Total Gallons Sold			
Expected Collection Rate			

Base Rate Covering Fixed Expenses			
Flow Rate Covering Variable Expenses			

Rates Based on Fixed and Variable Expenses Table for **Anytown, USA**

A	B	C	D
	Base Year +1	Base Year +2	Base Year +3
Fixed Operating Expenses	122,753	127,664	132,769
Principal and Interest Payments on Long Term Debt	118,865	118,865	118,865
Capital Outlay	0	88,374	0
Additional Reserve Funds Needed	49,302	(38,374)	50,000
Total Fixed Expenses	**$290,920**	**$296,529**	**$301,634**

Total Variable Expenses	**$99,032**	**$102,994**	**$107,114**

Expected Annual Billing Periods	12	12	12
Expected Total Customers	580	580	580
Expected Total Gallons Sold	29,664,087	28,180,883	26,771,839
Expected Collection Rate	98%	98%	98%

Base Rate Covering Fixed Expenses	$42.65	$43.47	$44.22
Flow Rate Covering Variable Expenses	$3.41	$3.73	$4.08

So which rate is right?

There is no one right rate structure for your water system. The primary purpose of a rates analysis is to ensure that rates are set high enough to cover all costs of running the system. However, there are community conditions and circumstances that may require other factors be considered in the process of determining rates. Below are some factors to consider as you adjust your rates:

- Base rates for commercial and industrial customers may need to be higher due to possible higher costs of providing service, such as more expensive metering systems, or if these users require additional peak-production capacities (well production, treatment plant, storage, pumping, etc.) to meet their requirements.
- Some systems may want to minimize costs to commercial and industrial users in order to attract new business to the community by shifting a larger portion of the costs to residential users.
- Limits on the amount of water available to the system may require a rate structure that encourages conservation and that charges a premium for wasting water or for high usage.
- A community whose wastewater treatment facility is at or very near capacity may choose a rate structure that discourages high usage in order to avoid the expense of expanding and/or upgrading wastewater facilities.
- To avoid the shock to customers of a single, large rate increase, some systems may wish to phase in their rate increase over several years. This may be especially true for systems that have not changed their rates in a long time.

If you have multiple customer classes or charge different base rates based on meter size, one of the most difficult yet most important aspects of rate setting is making sure that different customer types are paying their fair share. You should be intentional about setting rates for each customer type based on data and community conditions. Avoid the easy trap of overcharging one customer type while undercharging another, which can create animosity towards the water system from overcharged customers.

You may wish to generate multiple alternatives for consideration when you are adjusting rates. Each alternative will generate the same amount of revenue (assuming assumptions are correct), but they impact customers in dramatically different ways. For example, a high base charge will have more of an impact on low-gallon users, while a high flow rate will have more impact on high-gallon users.

Ultimately, what constitutes “fair” is a policy decision that you and your water system’s leadership need to make. Is it fair for an elderly customer using 1,500 gallons a month to pay the same share of fixed expenses as a household that uses 15,000 gallons a month to irrigate their yard and fill their pool? Some would argue that bigger users should pay a greater share of fixed expenses, while others would argue that because fixed expenses don’t change with usage, every customer should pay the same amount. Have specific reasons for the choices you make.

One practice that is helpful when comparing rate alternatives is showing what different customers would pay under different rate alternatives. First, using usage data, identify a group of typical customers for your system or customers of concern. That could include very low users, average users, high residential users, water-intensive small businesses, agriculture, or institutions like schools or hospitals. USDA, for example, estimates 5,000 gallons a month as typical residential use. Then calculate how much each of those customers would pay under each rate alternative and put the findings into a table. That makes head-to-head comparisons

of rate options easier. You may wish to calculate the difference between the lowest and highest possible rate for each example customer. The Customer Comparison table is provided on page **49.**

Another helpful practice is to show what the monthly bill would be at 1,000-gallon increments (0-1,000 gallons, 1,001-2,000 gallons, etc.) and the number of customers that fall into each usage level. Many utility billing systems have built-in reporting functions that are able to produce this type of usage summary. Otherwise, you can use the Customer Impact table on page **49**.

Customer usage information can be found in your billing records. One method is to calculate each customer's total usage for the last 12 months and then calculate an average by dividing by the number of billing periods. As mentioned, if you have a computer and billing software, this should be very easy to do. Customer usage does change throughout the year, so another method is to sort all of the bills sent to your customers in a one-year period into the usage levels and then divide each level by the number of billing periods.

If your billing software cannot easily export these data, you may have to do the tabulation by hand. If this is the case, a faster method is to use a sample of four months. The general rule for selecting months is to use the months with the highest and lowest usage and two medium-usage months (for example, July, December, October, and March). You may still want to tabulate all 12 months for your largest users, especially if they have seasonal variation in water use. If your system charges different rates for residential and commercial customers, you need to calculate the average monthly usage for each customer class.

Then enter the bill scenarios and calculate the price at each level of usage. Use the high end of the range for the calculation. So, for 0 to 1,000 gallons, calculate the bill for 1,000 gallons. For 1,001 to 2,000 gallons, calculate the bill for 2,000 gallons, and so on. In column G, record a cumulative total of the customers up through that usage level, and then in Column H, record a cumulative percentage of the customers up through that usage level (the number of customers up through that level divided by total customers). For example, Column G for the 1,001 to 2,000 gallons line would be the total of customers for 0 to 1,000 gallons and 1,001 to 2,000 gallons. And Column G for the 2,001 to 3,000 gallons line would be the total of customers for 0 to 1,000 gallons, 1,001 to 2,000 gallons, and 2,001 to 3,000 gallons.

When completed, you can see the number of customers each month in each usage level, what they would pay for water under each rate scenario, and what percentage of all customers will pay no more than that level.

In a variation on this table, you can also include the current rates and then show how much the monthly bill will go up under each of the rate scenarios. That way, you can see the percentage of customers that will pay no more than $5.00 extra per month, or no more than $10.00 extra per month.

Increasing the Rates of Multiple Services

It is a best practice to review the adequacy of current rates for all of your services each year. You may find that you need to raise both drinking water and wastewater rates at the same time. While you should calculate each of the new rates separately, if most of your customers receive both services, you may wish to look at the customer impact of the two rate increases together.

Explanation of Example—City of Anytown, USA

Customer Comparisons

The top table on page **50** shows what representative customers from Anytown would pay per month under the four different rate structures described earlier. Anytown chose to compare four customers—low residential users consuming 1,500 gallons a month, average residential users consuming 5,500 gallons a month, high residential users consuming 15,000 gallons a month, and their Main Street café, a customer of concern, which consumes 36,000 gallons a month.

All four rate structures are single block with a base fee that does not include a gallon allowance. Even though all four rate structures should yield the same amount of revenue, there is a great disparity in the base rates and flow rates across the four options.

Interestingly, the average customer pays roughly the same monthly bill under all four scenarios. But the low residential user and the high residential user see much bigger swings based on which rate structure is selected—in both cases, their highest potential bill is about double their lowest potential bill. For the café, the difference between the lowest and highest bill is almost $200 a month. These comparisons can help Anytown discuss which rate is most fair and most appropriate for their community.

The bottom table on page **50** shows the maximum monthly bill customers at different usage levels would pay under each of the four rate scenarios. The columns at the right show the cumulative number and percentage of customers that would pay no more than that amount per month. About half of Anytown's customers use 5,000 gallons or less every month, so their monthly bills would be no more than roughly $63.00 under any of the four scenarios.

Customer Comparison Table

A	B	C	D	E	F	G
	Description of Rate Option					
	Base Rate					
	Flow Rate					
Customer	Typical Usage	Monthly Bill: Option 1	Monthly Bill: Option 2	Monthly Bill: Option 3	Monthly Bill: Option 4	Difference of Lowest to Highest

Customer Impact Table

A	B	C	D	E	F	G	H
	Description of Rate Option						
	Base Rate						
	Flow Rate						
Usage Level (Gallons per month)	Number of Customers	Monthly Bill: Option 1	Monthly Bill: Option 2	Monthly Bill: Option 3	Monthly Bill: Option 4	Cumulative Total Customers	Cumulative % of Total Customers
0 to 1,000							
1,001 to 2,000							
2,001 to 3,000							
3,001 to 4,000							
4,001 to 5,000							
5,001 to 6,000							
6,001 to 7,000							
7,001 to 8,000							
8,001 to 9,000							
9,001 to 10,000							
10,001 to 11,000							
11,001 to 12,000							
12,001 to 13,000							
13,001 to 14,000							
14,001 to 15,000							
More than 15,000–at least							

Customer Comparison Table for **Anytown, USA**

A	B	C	D	E	F	
	Description of Rate Option	Raise Base Only	Raise Flow Only	Raise Base and Flow	Fixed by Base; Variable by Flow	
	Base Rate	$39.14	$13.65	$25.00	$42.65	
	Flow Rate	$3.75	$9.73	$7.55	$3.41	
Customer	Typical Usage	Monthly Bill: Option 1	Monthly Bill: Option 2	Monthly Bill: Option 3	Monthly Bill: Option 4	Difference of Lowest to Highest
Low Residential User	1,500	$44.77	$28.25	$36.33	$47.76	$19.52
Average Residential User	5,500	$59.77	$67.17	$66.53	$61.39	$7.40
High Residential User	15,000	$95.39	$159.60	$138.25	$93.75	$65.85
Café on Main Street	36,000	$174.14	$363.93	$296.80	$165.29	$198.64

Customer Imapct Table for **Anytown, USA**

A	B	C	D	E	F	G	H
	Description of Rate Option	Raise Base Only	Raise Flow Only	Raise Base and Flow	Fixed by Base; Variable by Flow		
	Base Rate	$39.14	$13.65	$25.00	$42.65		
	Flow Rate	$3.75	$9.73	$7.55	$3.41		
Usage Level (Gallons per month)	Number of Customers	Monthly Bill: Option 1	Monthly Bill: Option 2	Monthly Bill: Option 3	Monthly Bill: Option 4	Cumulative Total Customers	Cumulative % of Total Customers
0 to 1,000	54	$42.89	$23.38	$32.55	$46.06	54	9%
1,001 to 2,000	36	$46.64	$33.11	$40.10	$49.47	90	16%
2,001 to 3,000	44	$50.39	$42.84	$47.65	$52.87	134	23%
3,001 to 4,000	71	$54.14	$52.57	$55.20	$56.28	205	36%
4,001 to 5,000	79	$57.89	$62.30	$62.75	$59.68	284	49%
5,001 to 6,000	81	$61.64	$72.03	$70.30	$63.09	365	63%
6,001 to 7,000	52	$65.39	$81.76	$77.85	$66.50	417	73%
7,001 to 8,000	51	$69.14	$91.49	$85.40	$69.90	468	81%
8,001 to 9,000	40	$72.89	$101.22	$92.95	$73.31	508	88%
9,001 to 10,000	29	$76.64	$110.95	$100.50	$76.72	537	93%
10,001 to 11,000	15	$80.39	$120.68	$108.05	$80.12	552	96%
11,001 to 12,000	10	$84.14	$130.41	$115.60	$83.53	562	98%
12,001 to 13,000	5	$87.89	$140.14	$123.15	$86.94	567	99%
13,001 to 14,000	1	$91.64	$149.87	$130.70	$90.34	568	99%
14,001 to 15,000	1	$95.39	$159.60	$138.25	$93.75	569	99%
More than 15,000–at least	6	$99.14	$169.33	$145.80	$97.16	575	100%

Your rates and debt

As a small system, you are likely able to cover the cost of short-lived assets like meters and valves through your water sales and reserves funds. But most small systems have not saved enough money to cover the replacement cost of long-lived assets like pipes, tanks, and wells. Instead, these systems have to borrow money to replace these assets as well as for some expensive maintenance tasks like tank painting.

All lenders—whether a bank, the bond market, or a governmental program—will look at your rates and finances as part of evaluating your loan. This process is called underwriting. They are determining whether you are likely to pay back your loan.

Lenders will do an analysis similar to the one described in this guide—measuring the sufficiency of your current rates over time. They will look at whether your operating revenues are enough to cover your operating expenses, whether you have enough money to pay for current and future debt service, and whether your reserves are remaining at a healthy level to handle any unexpected costs or unexpected revenue shortfalls. They may also compare your rates to demographic data within your community and to other, similar water systems around your state or territory or to other, similar tribal nations. You may be required to adjust your rates as a condition of receiving a loan or grant.

If you have existing debt, your lender has likely required you to set aside an amount of money in the bank to ensure that debt payments can be made on time and in full. This is called a debt service reserve, and you must maintain it for the life of the loan. If you are in the process of changing your rates, it is a good practice to give your lender a head's up. In most cases, lenders will let you select any rate structure you feel is most appropriate for your community as long as it maintains your financial health.

Compare with Caution!

When adjusting rates, many systems wonder what their neighboring communities are charging. It's a natural desire to compare. But, when it comes to rates, compare with caution. Your rates should reflect the total cost of running your water system, and that total cost is unique to each system. Even your neighboring communities may have very different financial realities from your own. Nevertheless, some funders like USDA use comparisons with other, similar communities to determine your eligibility for grant and low-interest loan programs. The Environmental Finance Center at the University of North Carolina conducts statewide rate surveys and maintains Financial Sustainability and Rates Dashboards for several states that assist utility managers and local officials to compare and analyze water and wastewater rates against multiple characteristics, including utility finances, system characteristics, customer base socioeconomic conditions, geography, and history. You can access these Rates Dashboards at: https://efc.sog.unc.edu/utility-financial-sustainability-and-rates-dashboards

Beyond the single-block rate structure

The rate structures described in this guide, and the rate structure for Anytown, USA, are single-block rates with one customer class. It is possible to calculate these rates by hand or by using a basic spreadsheet like the one provided in the Excel tables download file that accompanies this guide. If your community has multiple customer classes, varies the base rate with the size of the meter, or wants to institute or revise increasing block or decreasing block rates, you need more advanced resources. In those instances, the assistance from a technical assistance provider with experience in rate analysis would be invaluable for your community.

Chapter 5: Adjusting rates: How you do it makes a difference

By going through the process in this guide, you may discover that your rates need to increase in order to cover the full cost of running the system. You have controlled costs as much as possible, but a rate increase is still necessary to cover the cost of your operations, future capital needs, and reserve goals. Don't be ashamed! For far too long, our industry has viewed rate increases as at best a necessary evil and at worst a failure of management. But a rate increase that is based on sound data analysis is actually a responsible action to protect public health and ensure that the system can run properly for years to come. And you should describe the rate increase that way to your customers.

But make no mistake, your customers will notice when you raise rates, so don't try to hide it from them! Nobody likes that kind of surprise. Some may even complain loudly when they see you in the grocery store. Explanations after you've raised rates will likely sound like excuses to customers. And you will have lost support you could have had if you had made customers aware beforehand. Here are some ideas to help with gaining customer support for the needed increases.

Educate the board

Getting ready for a rate increase starts with the board doing its homework. The board needs to assess the physical and financial condition of the system honestly.

When was the last time the board toured your system's facilities? If it has been more than six months, schedule a date as soon as possible for the entire board to view your facilities with the operator. Together, look at each part of the system—how it works, what preventative maintenance is being done to keep it in good shape, and when it will need to be replaced. Make a list of both the good and bad parts of the system's operation, separating out cosmetic deficiencies like peeling paint on assets from functional deficiencies that may prevent service or endanger public health. Carefully identify any improvements the system plans to make and pay for with a rate increase, and be ready to explain why the improvements are necessary. Have the board review the last inspection from your primacy agency to see that all recommended improvements have been made or are included on your list.

Review next year's budget and identify what costs will be going up. If you know that your costs for electric services and chemicals will be higher, let your customers know. They will understand that you have no choice but to pass those increased costs along to those who receive your final product.

You know you have done your homework when you can knowledgeably answer customers when they ask, "Why do we need a rate increase?" It is easier for your customers to support a rate increase if they know specifically what the money will be spent on. The bottom line is to provide information, so customers know what you are doing and why. This is the essence of transparency.

Technical help for non-technical people

For board members who need to understand some of the technical aspects of a drinking water or wastewater plant and treatment process in order to make decisions about their physical maintenance and development, RCAP has produced two guides. *A Drop of Knowledge: The Non-operator's Guide to Drinking Water Systems* and *A Drop of Knowledge: The Non-operator's Guide to Wastewater Systems* explain in simple, everyday language water and wastewater treatment processes to people without a technical background or who have no prior experience with plant operations.

The drinking water guide is available here: https://www.rcap.org/resource/non-operators-guide/

The wastewater guide is available here: https://www.rcap.org/resource/non-operators-guide-to-wastewater-systems/

Educate your customers before the increase

Your program to educate customers should include the following three points:

1. **The proposed increase will ensure that the water system can comply with current regulations to protect the health and welfare of the community.**

Safe drinking water has both a personal and community impact. Modern water-treatment processes have almost eliminated diseases such as cholera and typhoid and will protect consumers from new and equally deadly contaminants we face due to increased industrialization and use of chemicals. Effects on the community are related to growth and economic development. Businesses and industries will not locate where they cannot be assured of safe, dependable water for their employees and manufacturing or processing needs. Do you think a business would locate to a place where the electricity supply is not stable? It is the same with the water supply. New businesses and residents expect a reliable and safe supply of water.

The Environmental Protection Agency (EPA) continuously updates regulations, such as the list of harmful contaminants, and primacy agencies (so called because they are the primary enforcers of regulations) set regulations to keep our drinking water safe and to protect our environment. As the list of contaminants deemed harmful to humans and the regulations to protect our water supplies expand, so will the cost of treating water. Additional money will be needed to pay for the new technologies to keep our water supply in compliance with these regulations.

Most of your customers have no idea the level of work and infrastructure involved in delivering safe water on demand to homes and businesses. Invite the public to tour your facilities. Use social media channels to talk about your work, and use pictures and videos for emphasis. Partner with your local schools to educate children about water treatment. You may even encourage a few young people to pursue a career in drinking water!

2. **The rate structure you have developed is based on hard data and is as equitable and fair as possible.**

Stress how the proposed rate structure you have developed is as fair as possible to all customers. The rates are based on an analysis of actual revenues and expenses; they aren't pulled out of thin air. Whatever principle or strategy you have used to develop the rate structure, make sure you can explain it to the public. If you have engaged a technical assistance provider in the

process, stress that you brought in a neutral, third-party expert to help with the analysis. Post the rates, and make sure that customers understand them.

3. **The rate increase is needed to cover the full costs of producing, treating, storing, and distributing water to the customers.**

Explain that the system must be self-supporting and that revenue from the sale of water must cover all costs of operating the system. Water systems must be self-sufficient, which is an important part of an industry-wide movement toward sustainability. In order to pay for itself, your system must rely solely on its own income, which comes mainly from water sales. As a system, you are responsible for keeping the public informed of the financial condition of the system and what it costs to provide safe and dependable water. Invite the public to take part in the budget process. Let the public know when you are working on the budget, and post more than the required notices inviting them to attend budget meetings. Use social media to keep the public up to date on your progress. Let residents know that you have nothing to hide—customers expect transparency from their governments and other service providers. The more your customers know about what it takes to provide the safe drinking water they take for granted, the more likely they will be to support a rate increase.

After all, unlike some businesses residents patronize, your community's residents have not only their funds invested month in and month out in your water system through the rates they pay, but the system is something they use and depend on daily—more than they ever think about for the way it fulfills their basic needs. And water systems are essentially monopolies—customers don't often have viable alternatives. A water system owes it to its customers to explain what this service is, how vital it is to their survival and lifestyle, and what it takes to bring them that service.

Getting the word out

As soon as you know a rate increase is coming, start getting the word out. Make sure everyone in the organization—the operator, clerk, all other employees, and the board—understands the need for the rate increase. And everyone is responsible for educating customers.

Think about your community and how to best get the word out. Divide the responsibility for some of the following tasks among board members, system managers, and staff:

- The local newspaper or radio coverage can help. Don't consider only placing an ad, but contact a reporter to pitch a news story as well that could include interesting information about the process the community has for supplying water. This would help with educating customers, which would help them support a rate increase.
- If your water system has a website, post an announcement and an explanation about the rate increase.
- Identify civic, business, or church groups that need to be informed.
- Garner the support of key community leaders.
- Send information home with school-aged children.
- If possible, include an insert with your regular billing, or prepare a separate mailing to all customers.
- Use social media platforms as a quick and inexpensive way to inform your customers about the system. Think about ways to increase the number of customers that follow you on social media.
- Think about other methods you can use to provide customers with information to illustrate the need for the rate increase.

Final thoughts

Don't wait until your system is in deep financial trouble or until a large and expensive piece of your system breaks to start thinking about a rate increase. Small, annual increases are much more acceptable to customers than large increases every three or four years. The task of evaluating the sufficiency of your water system's rates described in this guide is ongoing. You should continue to monitor your revenues and expenses throughout the year and continue to make this type of rate analysis part of your annual budget process. If your system's finances are in such good shape that a rate increase isn't necessary, tell your customers that news as well.

You have a responsibility for providing your community with an uninterrupted supply of safe drinking water. No one is going to thank you for keeping rates low if the water becomes unsafe to drink or the system keeps breaking down and there is no money to pay for repairs. The public trusts you to make the tough decisions, so don't let them down!

Need help with your community's water or wastewater system?

The Rural Community Assistance Partnership (RCAP) is a national network of nonprofit organizations working to ensure that rural and small communities throughout the United States and its territories have access to safe drinking water and sanitary wastewater disposal. The six regional RCAP partners provide a variety of programs to accomplish this goal, such as direct training and technical assistance, leveraging millions of dollars to assist communities develop and improve their water and wastewater systems.

If you are seeking assistance in your community, contact the office for the RCAP region that your state, territory, or tribal nation is in, according to the map below. Work in individual communities is coordinated by these regional offices.

RCAP Rural Community Assistance Partnership

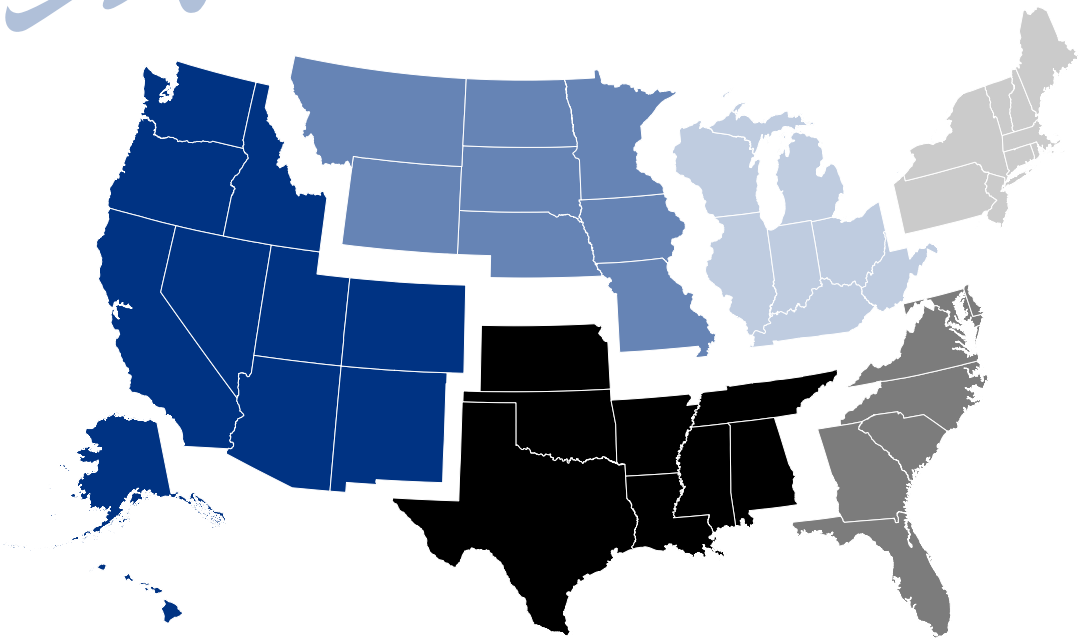

Midwest RCAP
Midwest Assistance Program
303 N Market St., Ste 2
Maryville, MO 64468
(660) 562-2575
www.map-inc.org

Great Lakes RCAP
Great Lakes Community Action Partnership
P.O. Box 590
219 S. Front St., 2nd Floor
Fremont, OH 43420
(800) 775-9767
www.glcap.org

Northeast and Caribbean RCAP
RCAP Solutions
191 May Street
Worcester, MA 01602
(800) 488-1969
www.rcapsolutions.org

Puerto Rico and U.S. Virgin Islands
(Caribbean RCAP)

Western RCAP
Rural Community Assistance Corporation
3120 Freeboard Drive, Suite 201
West Sacramento, CA 95691
(916) 447-2854
www.rcac.org

Southern RCAP
Communities Unlimited
3 East Colt Square Drive
Fayetteville, AR 72703
(479) 443-2700
www.communitiesu.org

Southeast RCAP
Southeast Rural Community Assistance Project
P.O. Box 2868
347 Campbell Ave. SW
Roanoke, VA 24016
(866) 928-3731
www.sercap.org

RCAP National Office
1725 I Street NW, Suite 225 • Washington, DC 20006
(202) 408-1273 • www.rcap.org

Notes

Rural Community Assistance Partnership, Inc.
1725 I Street NW, Suite 225
Washington, DC 20006
(202) 408-1273
info@rcap.org

www.rcap.org

Visit our website for other publications, electronic and print periodicals, and ways your community can get assistance with its water and wastewater system.

Formulate Great Rates

The Guide to Conducting a Rate Study for a Water System

RCAP

RURAL COMMUNITY ASSISTANCE PARTNERSHIP

an equal opportunity provider and employer

This guide was written by the Midwest Assistance Program, the Midwest RCAP, on behalf of Rural Community Assistance Partnership, Inc.

Copyright © 2011

The entire contents of this guide are available on the RCAP website at *www.rcap.org*

This material is based upon work supported under a grant by the Utilities Programs, United States Department of Agriculture. Any opinions, findings, and conclusions or recommendations expressed in this material are solely the responsibility of the authors and do not necessarily represent the official views of the Utilities Programs.

Formulate Great Rates

The Guide to Conducting a Rate Study for a Water System

Rural Community Assistance Partnership, Inc.

1701 K St. NW, Suite 700
Washington, DC 20006
202/408-1273
800/321-7227 (toll-free)
info@rcap.org

www.rcap.org

Table of Contents

INTRODUCTION 1

CHAPTER 1:
Is it time to examine your system's rate structure? 3

CHAPTER 2:
Is it time for a rate increase? 7

CHAPTER 3:
How do we spread an increase fairly among all customers? 14

CHAPTER 4:
Setting the final base and flow rates 26

CHAPTER 5:
Adjusting rates: How you do it makes a difference 32

Introduction

As a board member or officer of your community's water system, you have a very important responsibility to your community. Your job is to ensure that the water system provides residents with an adequate supply of high-quality drinking water delivered at a price that not only covers all of the costs of providing the service but also allows the system to prepare and plan for providing that service for many years to come. You must ensure that the water meets all regulatory standards, is reliable, and that there is sufficient quantity for all current and future users. When you consider everything that goes into providing safe, clean and affordable drinking water, it can sometimes seem like a daunting responsibility.

If you think of your water system as a business, which you should, in the simplest terms, you are providing a product or a service—clean water—and you are very familiar with the end result. On the other side of the business, you have revenue, specifically the income that customers give for you to provide the service according to the rates you set. With a commitment to fully analyzing your system's current rate structures and making corrections in those structures where needed, you can make facing the daunting challenge of providing this service easier. When you go through this process, you will know that the system will receive the proper amount of income from customers and with this be able to cover all of the functions on the expenses side of the water production and delivery business.

This guide breaks down all of the steps that need to be taken in the process of setting rates into manageable parts that can be completed by board members, your clerk, bookkeeper, or accountant. Your community's residents trusted your ability to make the right—if often difficult—decisions when they elected you to oversee the water system. This publication will help you make better decisions by showing you what is involved in the process and raising the issues that need to be addressed. If you need additional help, technical assistance providers, such as those who work for RCAP (which produced this guide), are available (see inside back cover).

Here are a few of the parts of the process of rate development as well as some issues that should be kept in mind through the process:

- **Rates must be set at a level that covers *all* of the costs to produce, treat, store, and distribute water to all customers.** These functions include other parts of a "business" that are not so visible—servicing debt, funding financial reserves, and other operations, maintenance and administrative costs, including those associated with regulatory compliance.
- **Rates must be fair and equitable.** Fair means that they are high enough to cover all costs of operating the system. Equitable means that each class (or type) of customer is paying what is rightfully its share of the costs.
- **A water system's revenues *must not* be used to pay for other municipal services.** Using water revenues for other purposes while not adequately maintaining financial reserves or fully funding maintenance needs will only increase the costs of operations in the long run.
- **Customers should know what the rates are.** This is a time when people demand transparency of their governments. Your governing board should post water rates in the water or city office, on your website (if you have one), and/or comply with any other notification or approval requirements dictated by your state. The rate schedule should be sent to all customers at least once a year and every time there is an adjustment to the rates.
- **The rate structure should be easy to understand.** In general, small systems (fewer than 5,000 users) should have between one and three user classifications and between one and five consumption blocks.
- **Water rates have a short life span.** The existing rate structure should be examined at least once a year as part of the budget-development process to determine if an adjustment needs to be made. If a dramatic change in income or expenses is experienced during the year, an analysis should be done to determine if an adjustment is necessary before the regular budgeting process.
- **Good rate structures are based on actual, accurate financial information and good customer records.** It's very difficult to develop a fair and equitable rate structure if you're not sure what your income and expenses have been for the last two to three years and how much water you are selling to each customer.
- **The rate structure should be easy to administer.** If it is too complex, chances are it's going to be hard for customers to understand and support.

About the worksheets in this guide and how to get electronic spreadsheets

Worksheets for performing a rate study are provided in this guidebook with instructions for filling them in and performing the necessary calculations. It is possible to complete a rate study by using the worksheets provided in this guidebook and filling them in by hand and on paper, but, of course, a computer makes collecting and manipulating the figures in a worksheet much easier.

All of the worksheets in this guide are available in electronic spreadsheet form (as Excel files) on the RCAP website at *www.rcap.org/rateguide* so you can enter the figures for your system on your computer and have the spreadsheet perform automatic calculations (the formulas are already entered to do the calculations for you). Using the spreadsheets on the computer will also allow you to easily transfer data about your system between spreadsheets, which is done several times in the steps of a rate study.

Chapter 1
Is it time to examine your system's rate structure?

What is a board's job?

"The board's job is to keep rates down!"

"They'd vote us out if we raised rates!"

"We haven't raised rates in 15 years, and we're proud of it!"

"We have a lot of folks on fixed incomes who can't afford to pay more!"

Chances are you have either heard comments like this or have said them yourself. If so, you're not alone. No board member truly wants to raise rates, and certainly no one enjoys raising them. If rates are reviewed annually as part of the budgeting process, they can be adjusted in small, annual increments instead of in infrequent but large increases. Customers are much more likely to be unhappy with an increase every few years of 10 percent, 20 percent, or even as high as 50 percent than they would be if there were very small (1 to 4 percent) annual increases. After all, most people's incomes increase slowly year to year and not in big jumps every few years, so why should things they pay for, like utilities, jump in price suddenly and unpredictably?

Examining your current rate structure

Before you look at raising rates, you should examine the current rate structure. The following questions can help you decide if a rate adjustment is needed in the near future:

- Did your system's revenues exceed expenses in each of the last three years?
- Were you able to make all scheduled payments on your long-term debt?
- Are you fully funding reserve accounts?
- Were you able to cover the cost of emergency and preventative maintenance as needed?
- Is your system in compliance with your state drinking water standards and regulations?
- Have you had a rate increase in the last three years?

If you answered no to any of these questions, it may be time to examine your rate structure.

Gaining public support

There is no way to get overwhelming public support for a rate increase. In fact, widespread support for higher rates will probably never happen. Public support will increase and the anger and frustration of most customers can be avoided by ensuring the following:

- Customers have a clear understanding of the proposed rate structure.
- It is clearly explained that the rate structure is necessary in order to operate the system on a financially sound basis.
- Each class of customers is paying is fair share of the costs.

Fair fare

One of the most difficult yet most important aspects of rate setting is making sure that different customer types are paying their fair share. It obviously costs more to install and maintain a service connection to a commercial customer with a 2-inch meter than to a residential customer with a ¾-inch meter. Therefore, the commercial customer should pay a higher connection fee and a higher monthly base charge. But does it really cost more to provide the actual amount of water that flows to the commercial customer?

The answer could be yes or no. It might be a bit cheaper based on the fact that you are able to sell a much higher quantity of water to that customer. Or there could be a situation in which the commercial customer might be driving your peak demand, which then requires additional treatment or pumping capacities. Breaking down those costs based on your system's expenses is one of the tasks that will happen later in this guide.

You should be mindful to set rates for each customer type based on the accurate, actual costs to provide the service and to avoid the easy trap of overcharging one customer type while undercharging another. Not only does over- and undercharging not help you cover the full costs of providing the service, but it also can create animosity toward the board from overcharged customers.

Small systems have several options for setting connection fees. Connection fees are different from deposits. Deposits are set and collected to ensure that if customers do not pay their bills, the system has money in reserve to cover expenses. Deposits should be set aside in an account so that the money can be refunded to customers if they discontinue service. Connection fees, (also called tap fees, impact fees, capital-improvement fees, subdivision fees, development fees*) are fees that are charged to a customer or group of customers to help the system cover the costs of capital improvements that have already been paid for or are being paid for by current customers or to cover the cost that the system will incur due to the additional connections. These fees are not refundable.

Base rates and flow rates—fixed costs and variable costs

The premise behind a base rate and a flow rate is that customers must pay a base rate even if they do not use any water at all in a given month; the flow rate covers the actual amount of water they use. The reason for having these two rates is that your system has costs (called fixed costs) that will have to be covered even if you never produce a single drop of water, such as long-term debt, reserve funding, billing and collecting expenses, operator salary, a portion of the clerk's salary, etc. You also have costs (called variable costs) that are directly related to producing water, such as labor costs, chemicals and equipment, utilities, contracted repairs, etc.

There are many opinions about what costs should be considered fixed and what costs should be considered variable, and determining them is not always going to be exact. A good rule of thumb is to consider costs that you would have to pay even if your system never produced a single drop of water as fixed costs and all costs directly associated with producing and delivering as variable costs. The fixed costs should be covered by the base rate and the variable costs covered by the flow rate.

Types of rate structures

The table on the next page describes the four most common types of rate structures. Study the chart to see what type of structure your system is currently using. As you will see, each structure type has advantages and disadvantages.

Your board needs to make careful and thoughtful decisions that balance the needs of both small- and large-volume users in your service area. If you are trying to develop or attract industry, you might want to select a rate structure that is more favorable to large-volume users. However, you need to be careful to not do this at the expense of the smaller commercial and residential users.

You should also consider the need to conserve. If your water supply is abundant and your treatment costs are relatively low and will remain so even with meeting new drinking water regulatory standards, you might not view conservation as paramount. Most financing agencies do consider conservation in evaluating financing for new projects, so that will need to be kept in mind. Conservation can also help in maintaining your level of storage as well as avoiding peak power rates that some electrical companies charge at various times of the year.

If your system is not metered and is using a uniform flat rate, it is strongly recommended that you install meters. If your system's meters are more than ten years old, you should formulate a plan to begin replacing the meters. Meters are the "cash register" of your system. If the meters are not reading accurately, you are losing revenue that your system needs in order to operate.

Overall, your board will want to select a rate structure that is fair and equitable to all users and produces the revenue necessary to operate your system.

Uniform flat rate

- Customers pay the same amount, regardless of the quantity of water used
- Used in unmetered systems

Example: Each customer is charged a flat rate of $15 per month.

Advantages:
- No expense for installing and reading meters

Disadvantages:
- All users pay either too much or too little for what they use
- Promotes high consumption

Single block rate

- Customers are charged a constant price per gallon, regardless of the amount of water used
- Often is coupled with a minimum charge for having service available

Example: $12 minimum service charge or base rate + $2 per 1,000 gallons used.

Advantages:
- Easy to administer
- May encourage water conservation
- Cost to customer is in direct proportion to amount used

Disadvantages:
- May discourage industries that use high water

Decreasing block rate

- The price of water declines as the amount used increases
- Each succeeding consumption block rate is cheaper
- Structure is based on the assumption that costs decline as consumption goes up

Example:
- $25 for first 2,000 gallons used
- $3.50 per 1,000 from 2,001 to 6,000 gallons
- $3.00 per 1,000 from 6,001 to 10,000 gallons
- $2.50 per 1,000 for everything over 10,001 gallons

Advantages:
- Attractive to large-volume users

Disadvantages:
- Production costs may not decrease with the gallons of water produced
- For a limited number of customers, low-volume users may be subsidizing large-volume users

Increasing block rate

- The price of water increases as the amount used increases
- Each succeeding consumption block is more expensive
- Structure is based on the assumption that water rates should promote water conservation

Example:
- $25 for first 2,000 gallons used
- $2.50 per 1,000 for 2,001 to 6,000 gallons
- $3.00 per 1,000 for 6,001 to 10,000 gallons
- $3.50 per 1,000 for everything over 10,001 gallons

Advantages:
- Promotes water conservation, which is especially important in areas of limited water supplies or high treatment costs
- Less water use means less wastewater and smaller, less expensive wastewater treatment facilities
- Provides a reasonable amount of water at a reasonable price and charges a premium to those using more

Disadvantages:
- Higher costs for high usage may discourage industry from locating in service area

Chapter 2
Is it time for a rate increase?

As your water system's governing board, you are responsible for making sure that customers are charged enough to cover all of the expenses to operate the system. You are also responsible for spreading those charges fairly and equitably among all the customers served by your system.

Some customers may say, "But water is free!" The water might be free, but pumping, treating, storing, distributing, operating and maintaining the system in compliance with regulations in definitely *not* free. For most systems, the costs for these functions are going up every year.

Determining full and true costs of operations

Before your system can determine how much additional revenue might be needed for the next operating year, your board must review current expenses to see if all costs to operate the utility are being charged in the expenditures. Determining total revenues is much easier than determining total expenses.

The worksheet on page 9 will help you determine all revenues and expenditures for your system. The expenses are divided into fixed and variable costs, as discussed in the previous chapter. That distinction will be used later in determining base rates and flow rates.

Completing worksheets on the computer

While a computer is not absolutely necessary to complete a good rate study, all of the worksheets in this guide are available in electronic spreadsheet form (as Excel files) on the RCAP website at *www.rcap.org/rateguide* so you can enter the figures for your system on your computer and have the spreadsheet perform automatic calculations (the formulas to perform the calculations are already in the files, so all you have to enter is the data for your system). Using the spreadsheets on the computer will also allow you to easily transfer data about your system between spreadsheets, which is done several times in the steps of a rate study.

The instructions for filling in the worksheets in this guide apply also to the electronic spreadsheets, except that you do not need to perform any calculations. However, be aware that the worksheets in this guide look slightly different than the online Excel spreadsheets.

While entering expenditures into the worksheet/spreadsheet, make sure that any hidden costs or costs that might be paid by other community funds are noted. If your board operates only one utility, this may not be an issue, but it is quite a common issue in communities that also oversee other departments. A few examples of costs that may not be directly or only paid by the utility are:

- the salaries of a clerk or other administrative employees. At least a portion of those salaries should be allocated to the utility.
- office expenses, such as rent, utilities, supplies, etc. At least a portion should be allocated to the utility.
- insurance: The portion of the premium that covers any property of the utility, liability for the utility, or employees of the utility should be allocated to the utility.
- professional services, such as accounting, auditing, legal, or any others, should have a portion allocated to the utility.
- any other services, such as lawn mowing, snow removal, etc., that benefit the utility should have a portion allocated to the utility.

Name of town or system: Income and Expense Worksheet For year: 20_____

	A	B	C	D	E	F	G	H	I	J	K	L	M	N	O	P	Q
		Budget	**Jan**	**Feb**	**Mar**	**Apr**	**May**	**Jun**	**Jul**	**Aug**	**Sep**	**Oct**	**Nov**	**Dec**	**YTD**	**Mo. Avg.**	**Budget Diff.**
3	**Revenue**																
4	Customer Payments																
5	Late Fees																
6	Other																
7	**Revenue Received**																
8																	
9	**Expenses**																
10	**Fixed Costs**																
11	Debt Service																
12	Reserve Funds																
13	Billing & Collection/Office Rent																
14	Insurance																
15	Legal/Accounting																
16	Operator Salary																
17	Other																
18	**Total Fixed Costs**																
19	**Variable Costs**																
20	Labor																
21	O & M																
22	Repairs																
23	Office Expenses																
24	Other																
25	**Total Variable Costs**																
26	**Total Expenses**																
28	**Profit/Loss**																

City of Anytown, USA — Income and Expense Worksheet — 2010

		B	C	D	E	F	G	H	I	J	K	L	M	N	O	P	Q
		Budget	**Jan**	**Feb**	**Mar**	**Apr**	**May**	**Jun**	**Jul**	**Aug**	**Sep**	**Oct**	**Nov**	**Dec**	**YTD**	**Mo. Avg.**	**Budget Diff. per month**
3	**Revenue**																
4	Customer Payments	$5,000	$4,700	$4,900	$5,200	$5,300	$4,800	$4,400	$4,400	$4,900	$5,300	$5,200	$5,500	$5,000	$59,600	$4,967	($33)
5	Late Fees	$100	$80	$100	$120	$80	$40	$120	$80	$120	$100	$80	$120	$40	$1080	$90	($10)
6	Other	$0	$0	$0	$120	$0	$0	$0	$0	$120	$0	$0	$0	$0	$240	$20	$20
7	**Revenue Received**	$5,100	$4,780	$5,000	$5,440	$5,380	$4,840	$4,520	$4,480	$5,140	$5,400	$5,280	$5,620	$5,040	$60,920	$5,077	($23)
8																	
9	**Expenses**																
10	**Fixed Costs**																
11	Debt Service	$822	$822	$822	$822	$822	$822	$822	$822	$822	$822	$822	$822	$822	$9,864	$822	$0
12	Reserve Funds	$130	$130	$130	$130	$130	$130	$130	$130	$130	$130	$130	$130	$130	$1,560	$130	$0
13	Billing & Collection/Office Rent	$200	$200	$200	$200	$200	$200	$200	$200	$200	$200	$200	$200	$200	$2,400	$200	$0
14	Insurance	$110	$0	$0	$1,300	$0	$0	$0	$0	$0	$0	$300	$0	$0	$1,600	$133	($23)
15	Legal/Accounting	$50	$0	$0	$0	$0	$0	$0	$200	$0	$0	$200	$0	$0	$400	$33	$17
16	Operator Salary	$1,000	$1,000	$1,000	$1,000	$1,000	$1,000	$1,000	$1,000	$1,000	$1,000	$1,000	$1,000	$1,000	$12,000	$1,000	$0
17	Other	$100	$100	$100	$100	$100	$100	$100	$100	$100	$100	$100	$100	$100	$1,200	$100	$0
18	**Total Fixed Costs**	$2,412	$2,252	$2,252	$3,552	$2,252	$2,252	$2,252	$2,452	$2,252	$2,252	$2,752	$2,252	$2,252	$29,024	$2,419	($7)
19	**Variable Costs**																
20	Labor	$200	$150	$0	$200	$350	$125	$100	$400	$0	$100	$200	$175	$250	$2,050	$171	$29
21	O & M	$1,400	$500	$600	$400	$11,000	$400	$600	$500	$400	$300	$500	$250	$600	$16,050	$1,338	$63
22	Repairs	$400	$1,500	$300	$0	$500	$700	$0	$0	$1,500	$0	$0	$400	$500	$5,400	$450	($50)
23	Office Expenses	$10	$0	$0	$0	$50	$0	$0	$20	$0	$0	$20	$0	$25	$115	$10	$0
24	Other	$0	$0	$0	-	-	-	-	-	-	-	-	-	-	$0	$0	$0
25	**Total Variable Costs**	$2,010	$2,150	$900	$600	$11,900	$1,225	$700	$920	$1,900	$400	$720	$825	$1,375	$23,615	$1,968	$42
26	**Total Expenses**	$4,422	$4,402	$3,152	$4,152	$14,152	$3,477	$2,952	$3,372	$4,152	$2,652	$3,472	$3,077	$3,627	$52,639	$4,387	$35
28	**Profit/Loss**	**$678**	**$378**	**$1,848**	**$1,288**	**($8,772)**	**$1,363**	**$1,568**	**$1,108**	**$988**	**$2,748**	**$1,808**	**$2,543**	**$1,413**	**$8,281**	**$690**	

EXAMPLE

Explanation of example – City of Anytown, USA

Income and Expense Worksheet

The income and expense worksheet can be used with any water system. In this example, the City of Anytown has entered information for the entire year of 2010. Here is a breakdown of the information entered for January: The city received $4,700 in payments from customers and $80 in late fees. The total income is $4,780 for the month.

The expenses are divided into fixed and variable costs. To start, the system has a loan. The payment on the loan is $822 per month, which includes interest. The city is building a reserve account to prepare for future expenses and repairs. $130 is put into the reserve account each month. The cost for printing and mailing the bills each month is about $75, and the water system's share of the rent is $125. So $200 goes on the "Billing & Collection/Office Rent" line. There were no insurance, legal or accounting bills this month. The operator gets paid $1,000 each month for his regular salary. The clerk gets $100 each month for her work with the water system. This among was put on the "Other" line. These are all of Anytown's costs that fall under fixed costs.

The section for variable costs has fewer categories. The figure for labor, in this case, is for extra work performed by the operator, which does not fall under his regular duties. In January, he was paid an additional $150 for emergency work done on a weekend. General operation and maintenance (O & M) costs, which include chemicals, electricity, etc., were $500 in January. A pump was also repaired in January, which cost $1,500. There were no additional costs in January.

The total fixed costs in January were $2,252, and the total variable costs were $2,150. The expenses to run the water system in January were $4,402. The water system made a profit of $378 in January.

In a similar way, the system's revenue and expenses for all other months of the year have been entered and calculated. As the next section discusses, the city can then look at its total revenues and expenses for the year and see which is greater to determine if a rate increase is necessary. At the bottom of the "YTD" column, the figure of $8,281 is shown, indicating that the system generated a profit for the year— that is, its total annual revenue was greater than its total annual expenses ($60,920 - $52,639 = $8,281).

The importance of an annual budget

After completing the income and expense spreadsheet, ask: Were revenues greater than all expenses? Or were expenses greater than revenues? If the expenses were greater, then it is obviously time for a rate increase. The amount of the shortfall is how much revenue you will need to raise through a rate increase.

Total expenses
- Total revenues
= Additional revenue needed

Hopefully your system is already developing a budget every year, especially if your state's laws or your funding source requires one. If you are not doing this, you need to start doing it now. A budget is a plan for a very important part of your system's operations—the financial part—and a way of organizing and managing this aspect of your operations. The most important part of the budgeting process is not just setting an accurate budget but is tracking actual income and expenses and comparing that information with your budget on a regular basis. If you don't know that your income and/or expenses are off from what you budgeted (planned) until after the budget year is completed, you can't adjust spending as needed. Don't let the meeting at which you adopt the budget be the last time you look at it for a year. The

budget should be reviewed by the board or council on a monthly or at least a quarterly basis. Your budget is your plan, and the only way a plan will work is if you follow the plan.

Streamlining operations to help in the interim

Before a decision is made to raise rates, your board needs to be sure that it has done everything possible to streamline operations (minimize expenses). Your system should be well-managed; customers should not have to pay for inefficiency and waste. Your board should be able to point out to customers all of the cost-saving measures that you have put in place when you are explaining why a rate increase is needed—that you have done your work first before asking for more of your customers.

Below are some measures that will help you better manage your system and that will probably help with your cash flow until a full rate study is completed and implemented. They are divided into short-term actions, which should result in almost immediate results, and longer-term measures that will take longer to see results from.

Short-term measures

- **Customer billing:** Make sure that meters are read and bills are sent out in a timely manner.
- **Billing all users:** Do all customers that receive water from your system have a meter? If not, install them. Are all customers being billed? In some communities, hospitals, churches, and other governmental departments (police and fire departments, city parks, public buildings) receive water without charge. This is not a good practice and is not fair to other users of the system. Are there customers that are stealing water? Illegal taps into the system, tampering with meters, bypassing meters, or taking water from hydrants to avoid paying are all theft. Establish and enforce stiff penalties. When your meter reader is out, make sure he/she is observant for signs of theft.
- **Accounts receivable:** If your collection and shut-off policies are not being strictly enforced, your system is losing revenue. The customers who pay on time are subsidizing late payers. If you have a large amount of accounts receivable, you should consider reducing the amount of time that customers are given to pay their bills. Also, your penalty for late payments is perhaps not high enough to encourage customers to pay on time.
- **Paying bills:** Prioritize your expenses for payment. Pay higher-priority items first (debt-service payments, salaries). Avoid paying late-payment penalties, if possible. Postpone any large, non-essential purchases.
- **Put your money to work:** When money is collected, is it immediately deposited? Are your bank accounts earning the highest possible interest rate? Shop around for banking services, use more than one bank, and place reserves in higher-interest certificates of deposit or money market accounts. Cities, villages, and nonprofit water districts can and should be earning interest on their money.
- **Transfers from financial reserves:** This measure should be taken only in emergencies. Before you transfer funds from reserve accounts, know how and when you will replenish the reserves you are “borrowing” from.
- **Temporary surcharges:** This measure should be taken only in emergencies. You can place a small surcharge on each meter to get through tight times. Set a strict limit on the period the surcharge will be in effect with a definite cut-off date. This is a very short-term measure, preferably for no more than three to six months. Make sure the customers understand the need for the surcharge.

Longer-term measures

- **Leak detection:** Subtract the number of gallons you billed your customers in a given month from the amount of water you produced or purchased. After allowing for known losses, such as what is used for flushing, figure out how much water your system is losing. It should be less than 15 percent of your water production. If it is higher than that, you are losing revenue and need to begin to identify loss points and start fixing them.
- **Meters:** As stated before, meters are the cash register of your system. If you don't have meters or your meters are not reading accurately, your system is losing money. If your meters are more than 10 years old, they probably need to be replaced. You should start a meter-replacement program that replaces approximately 10 percent of all meters every year, which means that over a decade all meters will be replaced.
- **Fees, deposits, surcharges:** Review your current fee and deposit policies to make sure they reflect the cost of providing services. Does your hook-up fee really cover the full cost of hooking up a new customer? Does your service-fee structure cover the extra cost of night and weekend work? Make sure all of your policies are in writing, and *always* treat customers equally. Many systems are now charging "impact fees." These require new customers to make up-front contributions to capital costs (such as additional wells, treatment, and other system components) the system incurs because new customers are hooking up. By doing this, existing customers are not subsidizing the direct cost of growth.
- **Bulk purchasing:** Consider purchasing chemicals and supplies in bulk to save money. Try to coordinate with a nearby system/systems to buy larger quantities or to purchase equipment that can be shared. Always get bids on high-cost items. Call around periodically to check prices to ensure that you are getting the best price on your supplies.

Chapter 3
How do we spread an increase fairly among all customers?

While no one likes a rate increase, customers are less likely to complain if they know that the increased cost is being shared fairly among all customers.

To make sure the cost of operating your system is being shared fairly, you need to know something about the history of your customers' water use. Gathering this history is part of a rate study. Doing a good rate study takes some time and work. Your board may want to appoint a committee to carry out the study. Be sure to include your city's accountant and your billing and collection clerk. Asking one or two customers to participate on the committee can increase public involvement, bring in the views of an important set of stakeholders, and help build support for the rate adjustment.

Many utility billing systems have built-in reporting functions that are able to produce usage information as described below. Otherwise, you can use the worksheet and the instructions starting on the following page to gather this information.

Collecting information

To determine how much water is used, this question needs to be answered: How many customers use how much water in an average month?

This information can be found in your customer billing records. The best method is to calculate each customer's usage for the last 12 months and then calculate an average. As mentioned, if you have a computer and billing software, this is very easy to do.

If you have to do it by hand, however, it could take several weeks for you to collect and format this information. If this is the case, a faster method is to use a sample of four months. The general rule for selecting months is to use the months with the highest and lowest usage and two medium-usage months (for example, July, December, October, and March).

If you use the four-month sample method, it is very important that you gather data for all 12 months for large users, particularly those that have wide variations in usage from month to month, such as seasonal industries, schools, etc. Analyzing only four months of data from large users could cause wide distortions in your figures. Use the Worksheet for Large Users (page 18) to get the monthly averages.

If your system charges different rates for residential and commercial customers, you need to calculate the average monthly usage for each current rate schedule.

Use Worksheet 1 to calculate the number of customers at each usage level for each month. Make a copy for each month calculated (four or 12) and for each rate schedule. Use the tick and cross method (tally or hash marks) to count customers at each usage level, and then add the total number in each level. Usage levels above 15,000 gallons need to have actual usage numbers recorded. Again, use the Worksheet for Large Users to calculate the monthly averages.

Worksheet 1 - Customer Usage Chart for the month of _____

Water usage for the month in gallons	Tally number of customers in each usage group	Total number of marks
Under 1000		
1001-2000		
2001-3000		
3001-4000		
4001-5000		
5001-6000		
6001-7000		
7001-8000		
8001-9000		
9001-10,000		
10,001-11,000		
11,001-12,000		
12,001-13,000		
13,001-14,000		
14,001-15,000		

List actual usage for each customer over 15,000	
Water Used	Customer/Business Name

Explanation of example – City of Anytown, USA

Worksheet for Large Users

In Anytown, there is an elementary school that uses much more water when school is in session. Its usage is entered for each month of the year. In January, it used 23,900 gallons. In July, it used 1,800 gallons. Similarly, the usage for another larger user is entered—a car wash. The total gallons used by the large users is found at the bottom of the worksheet. In this case, the large users used 617,400 gallons for the year, for an average of 51,450 gallons per month. This information is used in subsequent worksheets.

Analyzing customer usage

When the usage information for all customers has been recorded for each month and each rate class in Worksheet 1, this information needs to be summarized to establish the general customer profile, which is Worksheet 2.

There are three ways to use worksheet 2:

1. Enter the number of customers for each month in each usage category.
2. Select 4 months and enter the number of customers for those months in each usage category.
3. Enter in column N the average number of users for per month in each usage category.

The method you select will depend on the information available to you. If you have to figure usage manually and use worksheet 1, you should use the 4-month method (option 2 above). If your computer system can give you the average number of customers for each usage category, then use method 3 and enter the numbers in column N. Otherwise, the most accurate method would be the first. Enter the actual number of customers for each usage category.

If your system has separate rate schedules for residential and commercial users, you will need to complete a separate Worksheet 2 for each rate class.

Worksheet for Large Users (more than 15,000 gallon per month average)

Name	Usage for each month													
	Jan	Feb	Mar	Apr	May	Jun	Jul	Aug	Sep	Oct	Nov	Dec	Annual Total*	Monthly Avg**
Anytown Elementary	23,900	22,500	23,600	17,900	16,900	6,900	1,800	3,600	21,000	31,900	34,500	26,900	231,400	19,283
Anytown Car Wash	19,000	16,000	18,000	33,000	35,000	45,000	40,000	42,000	45,000	40,000	33,000	20,000	386,000	32,167
													0	0
													0	0
													0	0
													0	0
													0	0
													0	0
													0	0
													0	0
													0	0
													0	0
													0	0
													0	0
													0	0
													0	0
													0	0
													0	0
													0	0
													0	0
													0	0
Totals	43,900	38,500	41,600	50,900	51,900	51,900	41,800	45,600	66,000	71,900	67,500	46,900	617,400	51,450

* To obtain the figures for this column, for each row, add figures for Jan-Dec. Enter the total in this column.

** To obtain the figures for this column, take the figure in the previous column (Annual Total) and divide it by 12. Enter the result in this column.

EXAMPLE

Worksheet for Large Users (more than 15,000 gallon per month average)

Name	Usage for each month													
	Jan	Feb	Mar	Apr	May	Jun	Jul	Aug	Sep	Oct	Nov	Dec	Annual Total*	Monthly Avg**
Totals														

* To obtain the figures for this column, for each row, add figures for Jan-Dec. Enter the total in this column.

** To obtain the figures for this column, take the figure in the previous column (Annual Total) and divide it by 12. Enter the result in this column.

Worksheet 2 - General Customer Profile

	A	B	C	D	E	F	G	H	I	J	K	L	M	N	O	P	Q	R	S	T
	Water use per month in gallons	Jan	Feb	Mar	Apr	May	Jun	Jul	Aug	Sep	Oct	Nov	Dec	If Average Number of users is known - Enter here	Average Number of Customers per month	Customer Percentage of Total	Average Use	Average Total Water Use	Percent of Average Total Water Used	Target Revenue
4	**Under 1000**																500			
5	**1001 - 2000**																1500			
6	**2001 - 3000**																2500			
7	**3001 - 4000**																3500			
8	**4001 - 5000**																4500			
9	**5001 - 6000**																5500			
10	**6001 - 7000**																6500			
11	**7001 - 8000**																7500			
12	**8001 - 9000**																8500			
13	**9001 - 10,000**																9500			
14	**10,001 - 11,000**																10,500			
15	**11,001 - 12,000**																11.500			
16	**12,001 - 13,000**																12,500			
17	**13,001 - 14,000**																13,500			
18	**14,001 - 15,000**																14,500			
19	**Over 15,000**																			
20	**Totals**																			

Explanation of example – City of Anytown, USA

Worksheet 2

For Anytown, all of the information was entered for the whole year. There are a total of 109 customers in January. Twenty-three of them used less than 1,000 gallons of water. On the right side of the worksheet, information is provided. "Customer percentage of total" indicates the percentage of Anytown's customers at each usage level. In this example, 17.92% of customers use less than 1,000 gallons per month. The far right column shows how much of the water system's costs should be supported by each usage class. In this example, the customers who use less than 1,000 gallons of water should pay about 10.03% of the total cost to operate the system.

Instructions for Worksheet 2

1. **Columns B-M:** Enter the number of customers counted on the respective monthly sheet from Worksheet 1.
2. **Column O:** For each usage level (row), add the numbers entered in columns B-M. Divide this total by 12 if you have figures for all 12 months or 4 if you have figures for only 4 months. Enter the result in column O. Add the numbers in column O, and enter the total at the bottom of column O.
3. **Column P:** For each usage level (row), divide the number in column O by the total found at the bottom of column O and multiply this by 100 to get a percentage. Enter each result in column P.
4. **Column Q:** The values shown in this column represent the midpoint of each usage level. The midpoint is an accurate estimate for median usage of all customers in that category. For the last row (the over 15,000 gallons line), enter the monthly average usage of all customers using more than 15,000 gallons per month. To calculate the average usage for these customers, use the Worksheet for Large Users. Enter the Total Monthly Average from the Worksheet for Large Users in cell 19Q.
5. **Column R:** Multiply the number in each row of column O by the amount in column Q, and enter the answer in column R. (O x Q = R). After entering the results for each row in column R, add the numbers in column R, and enter the total at the bottom of column R.
6. **Column S:** For each usage level (row), divide the number in column R by the total found at the bottom of column R and multiply this by 100 to get a percentage. Enter each result in column S.
7. **Column T:** For each usage level (row), add the entry in column P to the entry on the same line in column S, and divide by 2. Enter each result on the corresponding row of column T. [(P+S)/2=T]

Worksheet 2 - General Customer Profile - 12 months

A	B	C	D	E	F	G	H	I	J	K	L	M	N	O	P	Q	R	S	T
Water use per month in gallons	Jan	Feb	Mar	Apr	May	Jun	Jul	Aug	Sep	Oct	Nov	Dec	If Average Number of users is known - Enter here	Average Number of Customers per month	Customer Percentage of Total	Average Use	Average Total Water Use	Percent of Average Total Water Used	Target Revenue
Under 1000	23	26	22	19	18	14	16	18	20	22	23	22	20	20.25	17.92%	500	10,125	2.13%	10.03%
1001 - 2000	10	11	14	21	22	27	23	22	19	15	16	13	18	17.75	15.71%	1500	26,625	5.61%	10.66%
2001 - 3000	16	15	17	18	17	15	14	17	18	18	19	17	17	16.75	14.82%	2500	41,875	8.82%	11.82%
3001 - 4000	19	19	18	21	22	20	18	19	20	23	18	18	20	19.58	17.33%	3500	68,542	14.43%	15.88%
4001 - 5000	13	14	16	14	15	17	13	15	18	13	9	12	8	14.08	12.46%	4500	63,375	13.34%	12.90%
5001 - 6000	7	6	8	6	7	5	12	9	10	9	13	11	5	8.58	7.60%	5500	47,208	9.94%	8.77%
6001 - 7000	5	5	3	4	6	7	3	5	3	4	6	6	3	4.75	4.20%	6500	30,875	6.50%	5.35%
7001 - 8000	2	4	3	3	2	4	6	2	2	3	4	3	2	3.17	2.80%	7500	23,750	5.00%	3.90%
8001 - 9000	2	1	2	3	1	1	3	2	0	2	0	3	2	1.67	1.47%	8500	14,167	2.98%	2.23%
9001 - 10,000	5	3	6	2	0	1	1	1	0	1	2	2	1	2.00	1.77%	9500	19,000	4.00%	2.89%
10,001 - 11,000	2	2	1	1	2	0	1	2	2	0	1	1	1	1.25	1.11%	10,500	13,125	2.76%	1.93%
11,001 - 12,000	3	2	1	1	0	1	2	0	0	2	0	2	2	1.17	1.03%	11,500	13,417	2.82%	1.93%
12,001 - 13,000														0.00	0.00%	12,500	0	0.00%	0.00%
13,001 - 14,000														0.00	0.00%	13,500	0	0.00%	0.00%
14,001 - 15,000														0.00	0.00%	14,500	0	0.00%	0.00%
Over 15,000	2	2	2	2	2	2	2	2	2	2	2	2	2	2.00	1.77%	51,450	102,900	21.66%	11.72%
Totals	109	110	113	115	114	114	114	114	114	114	113	112		113.00	100%		474,983	100.00%	100.00%

EXAMPLE

Interpreting the information

The information in Worksheet 2 will provide you with important information about your customers' water usage. For example, if you look at Column P, you will probably find that most of your customers, perhaps more than 50 percent, have an average usage of less than 4,000 of water per month.

What percentage of your customers uses an average of less than 4,000 gallons per month?

Answer:_____
(Use column P for your answer.)

Next, look at column S. You will probably find that these same customers use a small portion of the average total water used for the entire system, perhaps less than 10 percent of the total.

What percentage of the average total water used in your system goes to customers using less than 4,000 gallons per month?

Answer:_____
(Use column S for your answer.)

Now look at your high-usage customers, referring to the bottom of column P. What percentage of your customers is in the highest usage level? Beginning at the bottom of column P, work your way up column P until you reach 10 percent. These will be your highest-use customers. Now move across to column S to determine what percentage of the average of all water is used by this small group. Commonly this group will use 25 percent or more of the water.

Worksheet 2 helps to explain why coming up with a satisfactory rate structure is so difficult. A large proportion of your customers uses a small percentage of the water, and a small proportion of your customers uses a large percentage of the water. Who benefits and who pays? Continue to study Worksheet 2 to see what else can you learn about your customers' water usage.

Fairness check

When you have to adjust water rates, "equity" is the art of spreading the burden fairly among your customers. The governing board may not be able to entirely control the distribution of the costs of producing, treating, storing, and distributing safe water to your customers, but you can and *should* make sure that all customers are paying their fair share—not too much and not too little.

Look at Worksheet 2, column T (Target revenue). Target revenue is the percentage of all revenue that will be charged to each user level in a system that spreads costs fairly among all users.

Example

Say your target revenue for all customers using between 4,001 and 5,000 gallons per month is 10 percent. If your rate structure is fair, then the customers at this usage level will pay 10 percent of the total revenue needed to operate the system. If users are paying more or less than the percentage listed, they are paying too much or too little.

Target revenue is an average of the percentage of customers at each usage level and the percentage of the average amount of total water used by customers in each usage level.

Worksheet 3 will allow you to calculate the equity (or "fairness") of your current rate structure. Some of the information you gathered in Worksheet 2 will be used to see how fair your current rate structure is.

Worksheet 3 - Current Rate Structure Equity (Fairness) Check

	A	B	C	D	E	F	G
	Average Monthly Water Use	**Current Cost per Customer**	**Average Number of Customers**	**Total Average Revenue by use Class**	**% of Total Average Revenue**	**Target Revenue**	**Equity***
4	**500**						
5	**1,500**						
6	**2,500**						
7	**3,500**						
8	**4,500**						
9	**5,500**						
10	**6,500**						
11	**7,500**						
12	**8,500**						
13	**9,500**						
14	**10,500**						
15	**11,500**						
16	**12,500**						
17	**13,500**						
18	**14,500**						
19							
20	**Total**						
	*Goal is -2 to +2 percent						

Instructions for Worksheet 3

Column A: The numbers in this column represent the average monthly water use for each usage level. Substitute the average use in your highest-use category for the 0 in cell A19 (found in Worksheet 2, cell Q19).

Column B (Current cost per customer): Use your current rate structure to calculate how much you have charged a customer using each of the usage levels found in column A.

Column C: The average number of customers in each usage level is taken from Worksheet 2 column O.

Column D (Total average revenue by use class): For each usage level (row), multiply the dollar amount found in column B by the average number of customers in column C and enter the result in column D. (B x C = D) After entering the results for each row in column D, add the numbers in column D and enter the total at the bottom of column D.

Column E (% of total average revenue): Divide each row in column D by the total found at the bottom of column D and multiply by 100 to get a percentage. Enter each result in column E.

Column F: The target revenue is taken from Worksheet 2, column T.

Column G: Subtract each row in column E from the same row in column F, and place your answer in column G (F – E = G).

If your current rate structure spreads the cost of providing water equitably, the numbers on each row of column G will be between -2 percent and +2 percent. If some of the numbers are larger or smaller than -2 percent to +2 percent, the customers in that class are paying too much or too little for their water.

Explanation of example – City of Anytown, USA

Worksheet 3

All of the information for this worksheet is collected from information in other worksheets. Its purpose is to help determine if the water rates are fair for all customers. The goal is to be plus or minus two percent in column G.

Column A is always the same, with the exception of the last row. For Anytown, the average monthly water use is 51,450 gallons for large users, information that was retrieved from the Large User Worksheet. Column B (Current Cost per Customer) is collected from worksheet 4 (Calculating Basic Flow Charge). For Anytown, the current cost for a customer whose average use is about 11,500 is $102.00 per month. Column C (Average number of Customers) shows how many customers on average for each group for the last year. For those who use, on average, 3,500 gallons (would be the same customers who use between 3,001 and 4,000 gallons from worksheet 2), the average number of customers per month is 19.58 for Anytown. Column D is average revenue per month by user class. The average revenue for water sold to the large users is $843.20 per month. Column E breaks down the percentage of revenue collected from each user class. This example shows the minimum water users pay 7.27% of total revenues. The Target Revenue in column F is the "equitable" goal for each user class. This number comes from worksheet 2. The target revenue for the minimum water users is 10.03%. The final column—G—shows if the user group is paying its fair share. If a number is positive, the group is under paying. If the number is negative, the group is overpaying. In the example, the minimum user class has a target revenue of 10.03% and pays 7.27% of total revenue. This user class underpays by 2.75%. This is considered inequitable.

Worksheet 3 - Current Rate Structure Equity (Fairness) Check

	A	B	C	D	E	F	G
	Average Monthly Water Use	**Current Cost per Customer**	**Average Number of Customers**	**Total Average Revenue by use Class**	**% of Total Average Revenue**	**Target Revenue**	**Equity***
4	**500**	$18.00	20.25	$364.50	7.27%	10.03%	2.75
5	**1,500**	$22.00	17.75	$390.50	7.79%	10.66%	2.86
6	**2,500**	$30.00	16.75	$502.50	10.03%	11.82%	1.79
7	**3,500**	$38.00	19.58	$744.17	14.85%	15.88%	1.03
8	**4,500**	$46.00	14.08	$647.83	12.93%	12.90%	-0.03
9	**5,500**	$54.00	8.58	$463.50	9.25%	8.77%	-0.48
10	**6,500**	$62.00	4.75	$294.50	5.88%	5.35%	-0.53
11	**7,500**	$70.00	3.17	$221.67	4.42%	3.90%	-0.52
12	**8,500**	$78.00	1.67	$130.00	2.59%	2.23%	-0.37
13	**9,500**	$86.00	2.00	$172.00	3.43%	2.89%	-0.55
14	**10,500**	$94.00	1.25	$117.50	2.34%	1.93%	-0.41
15	**11,500**	$102.00	1.17	$119.00	2.37%	1.93%	-0.45
16	**12,500**	$0.00	0.00	$0.00	0.00%	0.00%	0.00
17	**13,500**	$0.00	0.00	$0.00	0.00%	0.00%	0.00
18	**14,500**	$0.00	0.00	$0.00	0.00%	0.00%	0.00
19							
20	**Totals**	$421.60	2.00	$843.20	16.83%	11.72%	-5.11
*Goal is -2 to +2 percent			Total	$5,010.87			

EXAMPLE

Chapter 4
Setting the final base and flow rates

In Chapter 2, you identified all of your utility's operating expenses. The income and expense spreadsheet breaks down the expenses into fixed and variable costs. The fixed expenses should be covered by your base rate, and the variable expenses should be covered by your flow rate.

Determining fixed costs

Start by determining how much each customer needs to pay toward your system's fixed costs. To do this, divide the monthly average fixed costs (from the income and expense spreadsheet—cell P18) by the average number of customers per month (total of column O from Worksheet 2) to get the monthly fixed costs per customer.

$_____ divided by _____	=	$_____
Monthly fixed costs	# of customers	Fixed costs per customer

Determining variable costs

Next you can determine the average amount your system will need to charge per 1,000 gallons of water to recover your variable expenses. First, determine your monthly average variable costs from your income and expense worksheet (cell P25) and write that amount in the first blank below. Next, divide the Average Total Water Use (found in Worksheet 2, cell R20) by 1,000 and write the result in the second blank below. Finally, divide the monthly variable costs (first figure) by the Average Total Water Use (second figure) to determine the variable cost per 1,000 gallons.

$_____ divided by _____		= $ _____
Monthly variable costs	Average Total water use (divided by 1,000)	Variable cost per 1,000 gallons

Your variable cost per 1,000 gallons represents your system's average cost of producing 1,000 gallons of water.

If your system includes 1,000 or 2,000 gallons of water in the base rate, your base rate needs to include the cost of this water. The reason for including this cost is that there are operation and maintenance costs associated with producing the first 1,000 gallons just as there are costs to produce the second, third, or fourth thousand gallons.

Now you will use the monthly fixed costs per customer and the variable cost per 1,000 gallons to develop a basic rate structure.

Base rate

Basic rule: Try to cover all of your system's fixed costs in the base rate portion of your rate schedule.

The fixed costs per customer that you calculated above represent each customer's fair (equal) share of having water available whenever they want it. If your base rate includes a minimum amount of water (1,000 or 2,000 gallons, for example), you need to include the cost of producing that water in the base rate. You do this by multiplying the variable cost per 1,000 gallons (calculated in the previous section) by the number of units of water included in the minimum. Then add this number to the fixed cost per customer to determine the base rate. The formula below will help you find your base rate. *Remember to make the calculation in parentheses first.*

1,000 gallons = 1 unit

$_____ + ($ _____ x _____) = $_____

Fixed cost per customer	Variable cost per 1,000 X # of units included in minimum	Base rate

Flow rate

Basic rule: Try to recover all of your system's variable expenses in the flow rate portion of your rate schedule.

Small systems should begin with a flow rate that is based on the calculated variable costs per 1,000 gallons. This allows you to build a rate structure that divides costs fairly among all customers regardless of the amount of water used. Once the flow rate is calculated and you have had a chance to study the overall rate structure, you may wish to modify it in response to local conditions and considerations.

Ensuring your rate structure covers all expenses

The following worksheet will help you make sure that your rate structure covers all expenses.

Worksheet 4 - Calculating Basic Flow Charge

	A	B	C	D	E	
3		Base rate	$18.00		Flow rate	$8.00
4		How many 1000's of gallons are				
5		included in base rate?		1		
6						
	Water usage for the month in gallons	**Average number of customers**	**Average usage (in 1,000-gallon units)**	**Revenue from base rate**	**Revenue from flow rate**	
8	**Under 1000**	20.25	0.5	$364.50	0.00	
9	**1001 - 2000**	17.75	1.5	$319.50	71.00	
10	**2001 - 3000**	16.75	2.5	$301.50	201.00	
11	**3001 - 4000**	19.58	3.5	$352.50	391.67	
12	**4001 - 5000**	14.08	4.5	$253.50	394.33	
13	**5001 - 6000**	8.58	5.5	$154.50	309.00	
14	**6001 - 7000**	4.75	6.5	$85.50	209.00	
15	**7001 - 8000**	3.17	7.5	$57.00	164.67	
16	**8001 - 9000**	1.67	8.5	$30.00	100.00	
17	**9001 - 10,000**	2.00	9.5	$36.00	136.00	
18	**10,001 - 11,000**	1.25	10.5	$22.50	95.00	
19	**11,001 - 12,000**	1.17	11.5	$21.00	98.00	
20	**12,001 - 13,000**	0.00	12.5	$0.00	0.00	
21	**13,001 - 14,000**	0.00	13.5	$0.00	0.00	
22	**14,001 - 15,000**	0.00	14.5	$0.00	0.00	
23	**Over 15,000 gallons**	2.00	51	$36.00	807.20	
24	**Totals**	**113.00**		**$2,034.00**	**2,976.87**	
25				**Total Monthly Revenue**	**$5010.87**	

EXAMPLE

Explanation of example – City of Anytown, USA

Worksheet 4

This worksheet calculates revenue based on number of users from worksheet 2, the base rate for water (C3), the flow rate (F3), and the number of thousand gallons included in the base rate. In the example, the base rate is $18.00, the flow rate is $8.00 and 1,000 gallons are included in the base rate.

Column B's information is from worksheet 2. The last row in column C reflects large users and is information collected from worksheet 2. Column D calculates revenue from the base rate, and column E calculates revenue from the flow rate. The base rate should cover your expenses from the income and expense worksheet. In the example, the base rate revenue is expected to be about $2,034 per month. The budget on the income and expense worksheet shows fixed costs to be about $2,419 per month. So the base rate should be higher to cover the fixed costs to run the water system.

This rate structure should provide enough revenue to cover your budgeted expenses. If you are unsure that your budgeted expenses are correct, you may want to increase your estimated expenses by 5 to 7 percent then refigure your fixed and variable costs to provide a cushion. If your system has a capital-improvements plan, be sure to add the expenditure projections into the fixed-costs section in the previous spreadsheets.

The rate structure you just completed is considered a single-block rate. In this type of rate structure, the fixed costs are divided evenly among users, and the variable costs are charged to the customer in direct proportion to the amount of water used.

Modifying the single-block rate structure

The primary purposes of a rate study are to ensure that rates are set high enough to cover all costs of operating the system and to ensure that costs are spread fairly among the system's customers. However, there are local conditions and circumstances that may require other factors be considered in the process of determining rates. Below are some factors that may need to be considered that might require a single block rate structure to be modified:

- Base rates for commercial and industrial customers may need to be higher due to possible higher costs of providing service, such as more expensive metering systems, or if these users require additional peak-production capacities (well production, treatment plant, storage, pumping, etc.) to meet their requirements.
- Some systems may want to minimize costs to commercial and industrial users

Worksheet 4 - Calculating Basic Flow Charge

	A	B	C	D	E	F
3		Base rate			Flow rate	
4		How many 1000's of gallons are				
5		included in base rate?				
6						
	Water usage for the month in gallons	**Average number of customers**	**Average usage (in 1,000-gallon units)**	**Revenue from base rate**	**Revenue from flow rate**	
8	**Under 1000**					
9	**1001 - 2000**					
10	**2001 - 3000**					
11	**3001 - 4000**					
12	**4001 - 5000**					
13	**5001 - 6000**					
14	**6001 - 7000**					
15	**7001 - 8000**					
16	**8001 - 9000**					
17	**9001 - 10,000**					
18	**10,001 - 11,000**					
19	**11,001 - 12,000**					
20	**12,001 - 13,000**					
21	**13,001 - 14,000**					
22	**14,001 - 15,000**					
23	**Over 15,000 gallons**					
24	**Totals**					
25		**Total Monthly Revenue* (D24 + E24)**				

Instructions for completing Worksheet 4:

Column A: Usage levels are taken from Worksheet 2 (column A).

Column B: Average number of customers in each usage level is taken from Worksheet 2, column O.

Column C: Average usage (expressed by 1,000 gallon units) is the same as the average use in Worksheet 2, column Q, divided by 1,000. Thus, 500 gallons of average use becomes 0.5, and 1,500 becomes 1.5. Replace the 0 in cell C23 with the amount from Worksheet 2, cell Q19, divided by 1,000.

Column D (Revenue from base rate): Write in the base rate you calculated above: $_____ (or in cell C3). Multiply each number in column B by your base rate, then enter the result in column D. When all rows are completed, add all of the numbers in column D, and enter your total at the bottom of the column.

Column E: Enter the calculated flow rate into cell F3, and enter the number of units included in the base rate into cell D4. Multiply each number in column B by the number in column C minus the number of units included in your base rate. Then multiply the answer by the flow rate. Enter the result in column E. The formula below will help you with this calculation *(remember to complete the calculation in parentheses first). If you get a negative number with this calculation, enter 0 in column E. (This is because the usage for this category is less than the minimum.)*

_____ x (_____ - _____) x $_____ = $_____

Column B	Average use minus # of units included in base rate	Flow rate	Revenue from flow rate

When finished, add the numbers in column E, and enter your total at the bottom of the column.

Add the total from the bottom of columns D and E and enter your answer here: $_____. This is the estimated total revenue your new rate structure will produce. Check it against your expense budget for next year.

in order to attract new business to the community by shifting a larger portion of the costs to residential users.

- Limits on the amount of water available to the system may require a rate structure that encourages conservation and that charges a premium for wasting water or for high usage.
- A community whose wastewater treatment facility is at or very near capacity may choose a rate structure that discourages high usage in order to avoid the expense of expanding and/or upgrading wastewater facilities.

If your system has more than two classes of customers, or if you have larger commercial or industrial users that are to be given special consideration with rates, it is highly recommended that you consider seeking qualified outside guidance to modify the single block-rate structure. Technical assistance providers from the Rural Community Assistance Partnership (RCAP) can provide assistance at no cost to your community.

Special attention should be devoted to non-standard requests for water service, that is, any request for service beyond a typical residential meter placement. These could take the form of service requests for new developments or subdivisions, or for single, large commercial or industrial users. Many systems also adopt impact or capital-improvement fees to cover increased demand on capital assets (source water, treatment, storage, pumping, distribution, etc.) as a result of increased demand from new customers.

See the inside back cover of this guide for contact information for assistance from RCAP in your state.

Chapter 5
Adjusting rates: How you do it makes a difference

Do you know the feeling when you go to the gas station to fill up your vehicle and see that the price of gas has increased each time? Are you shocked and mad? Do you feel like you are being ripped off or taken advantage of? Do the explanations for this that you hear on the news sound more like excuses than good reasons?

The lesson for small-system governing boards is: **Don't make a rate increase a surprise to your customers!** They *will* get mad. Some may even complain loudly when they see you in the grocery store. Explanations after you've raised rates will likely sound like excuses to customers. And you will have lost support you could have had if you had made customers aware beforehand.

The decision to raise rates is never an easy one. In earlier chapters, you have gone through the steps of developing an equitable (fair) rate structure that will fully cover all costs of operating your system. Following are some ideas to help with gaining customer support for the needed increases.

Educate yourself

Getting ready for a rate increase starts with the board doing its homework. The board needs to honestly assess the physical and financial condition of the system.

When was the last time you toured your system's facilities? If it has been more than six months, schedule a date as soon as possible for the entire board to view your facilities with the operator. Look at each part of the system—how it works, what preventative maintenance is being done to keep it in good shape, and when it will need to be replaced. Make a list of both the good and bad parts of the system's operation. Carefully identify any improvements the board plans to make and pay for with a rate increase, and be ready to explain why the improvements are necessary. Look at the last inspection from your state's regulatory agency to see that all recommended improvements have been made or are included on your list.

Technical help for non-technical people

For board members who need to understand some of the technical aspects of a drinking water or wastewater plant and treatment process in order to make decisions about their physical maintenance and development, RCAP has produced two guides. *A Drop of Knowledge: The Non-operator's Guide to Drinking Water Systems* and *A Drop of Knowledge: The Non-operator's Guide to Wastewater Systems* explain in simple, everyday language the water-treatment processes to people without a technical background or who have no prior experience with water-plant operations. See page 35 for how to obtain these guides.

Review next year's budget, and identify what costs will be going up. If you know that your costs for electric services and chemicals will be higher, let your customers know. They will understand that you have no choice but to pass those increased costs along to those who receive your final product.

You know you have done your homework when you can knowledgeably answer customers when they ask, "Why do we need a rate increase?" It is easier for your customers to support a rate increase if they know specifically what the money will be spent on. The bottom line is to provide information so customers know what you are doing and why, which, in essence, is what transparency is all about.

Streamline your operation

Before you increase rates, be sure you have done everything possible to cut back on expenses. Go back to the section in Chapter 2 about short- and long-term measures for cutting expenses and increasing revenue. Your system should be well-managed; your customers should not have to pay for inefficiency and waste.

Educate your customers before the increase

Your program to educate customers should include the following three points:

1. **The proposed increase will ensure that the utility can comply with current regulations to protect the health and welfare of the community.**

Safe drinking water has both a personal and community impact. Modern water-treatment processes have almost eliminated diseases such as cholera and typhoid and will protect consumers from new and equally deadly contaminants we face due to increased industrialization and use of chemicals. Effects on the community are related to growth and economic development. Businesses and industries will not locate where they cannot be assured of clean water for their employees and manufacturing or processing needs. Do you think a business would locate to a place where the electricity supply is not stable? It is the same with the water supply. New businesses and residents expect both a reliable and safe supply of water.

The Environmental Protection Agency (EPA) continuously updates the list of harmful contaminants, and state regulatory agencies (called "primacy agencies" because they are the primary enforcers of regulations) set regulations to keep our drinking water safe and to protect our environment. As the list of contaminants deemed harmful to humans and the regulations to protect our water supplies expand, so will the cost of treating water. Additional money will be needed to pay for the new technologies to keep our water supply in compliance with these regulations.

2. **The rate structure you have developed is as equitable and fair as possible; each class of customers is paying its fair share.**

Stress how the proposed rate structure you have developed is as fair as possible to all customers. For whatever principle or strategy you have used to develop the rate structure, make sure you can explain it to the public. Post the rates, and make sure that customers understand them.

3. **The rate increase is needed to cover the full costs of producing, treating, storing, and distributing water to the customers.**

Explain that the system must be self-supporting and that revenue from the sale of water must cover all costs of operating the system. Utilities must be self-sufficient, which is an important part of an industry-wide movement toward sustainability. In order to pay for itself, your system must rely solely on its own income, which comes mainly from user fees (the amount you charge customers). As a board, you are responsible for keeping the public informed of the financial condition of the system and what it costs to provide safe

and dependable water. Invite the public to take part in the budget process and once the budget is complete, don't keep it a secret.

After all, unlike some businesses residents patronize, your community's residents have not only their funds invested month in and month out in your water system through the rates they pay, but the system is something they use and depend on daily—more than they ever think about for the way it fulfills their basic needs. A water utility owes it to its customers to explain what this service is and how vital it is to their survival and lifestyle and what it takes to bring them that service.

Remember—there should be no surprises!

Educating customers should be an ongoing part of your system's operation. Your community's system belongs to its customers, and as a board, you work for them and on behalf of them. One of the best times to educate customers is while you are developing the annual budget. Let the public know when you are working on the budget, and post more than the required notices inviting them to attend budget meetings. You can publish the notices in the local newspaper or have them announced on the local radio station. Let residents know that you have nothing to hide, and you should act like you have nothing to hide (transparency again, which citizens are expecting of their governments). The more your customers know about what it takes to provide the safe drinking water they take for granted, the more likely they will be to support a rate increase.

Getting the word out

As soon as you know a rate increase is coming, start getting the word out. Primary responsibility for obtaining customer support for an increase belongs to the governing board. To be effective, each member of the board needs to understand the operation and needs of the system in order to communicate effectively.

Make sure your operator, clerk, and all other employees understand the need for the rate increase. Let them know the board expects their support. But remember—you as the governing board are responsible for educating customers. That is not a job that should be left only to employees.

Think about your community and how to best get the word out. Divide the responsibility for some of the following tasks among board members:

- How can we use the local newspaper or radio coverage to help? Don't consider only placing an ad, but contact a reporter to pitch a news story as well that could include interesting information about the process the community has for supplying water. This would help with educating customers, which would help them support a rate increase.
- If your utility has a website, can an announcement and an explanation about the rate increase be posted? Does the community as a whole have a website where this could be done?
- What civic, business, or church groups need to be informed?
- Would the support of key community leaders help?
- Can you send information home with school-aged children?
- Does your monthly billing process allow for providing additional information (such as a bill insert), or should the board prepare a separate mailing to all customers?
- What other ways can you use to provide customers with information to illustrate the need for the rate increase?

Final thoughts

Small increases are better than large increases: This almost goes without saying: Smaller is always better. Don't wait until your system is in deep financial trouble or a large and expensive piece of your system breaks to start thinking about a rate increase.

Scheduled, small increases are even better: Decide now to review your water rates every year as part of your annual budgeting process. Small, annual increases are much less painful for customers than large increases every three or four years.

Scheduled increases that don't happen are best of all: Once you get into the habit of reviewing rates every year, you will find that some years it won't be necessary to raise them at all. Certainly let your customers know when you *don't* have to raise rates.

As your board begins to think about a rate increase, it's important to remember that you were elected to take responsibility for providing your community with an uninterrupted supply of safe drinking water. No one is going to thank you for keeping rates low if the water becomes unsafe to drink or the system keeps breaking down and there is no money to pay for repairs. Keep in mind that the public trusted you (by electing you) to make the tough decisions, so don't let them down!

Other RCAP publications to help in the operations and oversight of water systems

If you are a board or council member or staff member with responsibilities for overseeing your community's water system, the Rural Community Assistance Partnership (RCAP) has produced many other publications to assist you in these responsibilities. These publications are titled/on the topics of:

- *A Drop of Knowledge: The Non-operator's Guide to Drinking Water Systems*
- *A Drop of Knowledge: The Non-operator's Guide to Wastewater Systems*
- *responsibilities (managerial, financial, legal, etc.) of board members of small water systems*
- *USDA Rural Utilities Service Borrower's Guide: A How-to for Water and Wastewater Loans from USDA Rural Development*
- *ARRA Registering and Reporting Guide for Water/ Wastewater Systems with Loans/Grants from the U.S. Department of Agriculture-Rural Utilities Service*
- planning and resources for sustainable infrastructure for small water systems
- financial management of small water systems
- developing and managing a water- or sewer-construction project
- water-distribution system maintenance
- asset management and conducting vulnerability assessments and emergency-response planning

All of the above publications can be accessed and downloaded for free (in PDF) on the RCAP website at *www.rcap.org* (click on "Publications & Resources" on the main menu).

Free resources that can be sent to you regularly: RCAP has a magazine–*Rural Matters*–that is produced several times each year. Subscriptions are free. Included in each issue are articles that are useful to small community leaders and system operators. RCAP also produces an electronic newsletter, the eBulletin. Subscribing by email is also free. Each issue provides helpful tips, guides and resources on practical subjects. Find subscription information for both of these resources at *www.rcap.org* (click on Publications & Resources).

NOTES

NOTES

NOTES

Need help with your community's water or wastewater system?

The Rural Community Assistance Partnership (RCAP) is a national network of nonprofit organizations working to ensure that rural and small communities throughout the United States have access to safe drinking water and sanitary wastewater disposal. The six regional RCAPs provide a variety of programs to accomplish this goal, such as direct training and technical assistance, leveraging millions of dollars to assist communities develop and improve their water and wastewater systems.

If you are seeking assistance in your community, contact the office for the RCAP region that your state is in, according to the map below. Work in individual communities is coordinated by these regional offices.

Rural Community Assistance Partnership

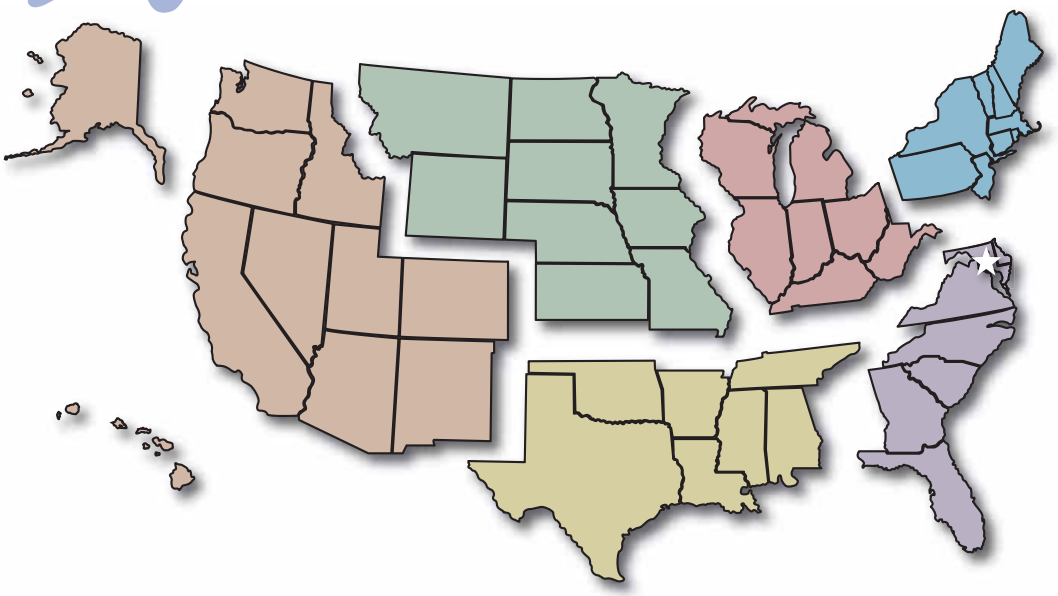

Puerto Rico (Northeast RCAP) and U.S. Virgin Islands (RCAC)

Western RCAP
Rural Community Assistance Corporation
3120 Freeboard Drive, Suite 201
West Sacramento, CA 95691
(916) 447-2854
www.rcac.org

Northeast RCAP
RCAP Solutions
P.O. Box 159
205 School Street
Gardner, MA 01440
(800) 488-1969
www.rcapsolutions.org

Midwest RCAP
Midwest Assistance Program
P.O. Box 81
212 Lady Slipper Avenue NE
New Prague, MN 56071
(952) 758-4334
www.map-inc.org

Great Lakes RCAP
WSOS Community Action Commission
P.O. Box 590
219 S. Front St., 2nd Floor
Fremont, OH 43420
(800) 775-9767
www.glrcap.org

Southern RCAP
Community Resource Group
3 East Colt Square Drive
Fayetteville, AR 72703
(479) 443-2700
www.crg.org

Southeast RCAP
Southeast Rural Community Assistance Project
P.O. Box 2868
347 Campbell Ave. SW
Roanoke, VA 24016
(866) 928-3731
www.southeastrcap.org

★ RCAP National Office ★
1701 K Street NW, Suite 700 • Washington, DC 20006
202/408-1273 • 800/321-7227
www.rcap.org

Rural Community Assistance Partnership, Inc.
1701 K St. NW, Suite 700
Washington, DC 20006
202/408-1273
800/321-7227 (toll-free)
info@rcap.org

www.rcap.org

Visit our website for other publications, electronic and print periodicals, and ways your community can get assistance with its water and wastewater system.